SAGI - BASI REFRIGERATE
EXM1C-X - 15-07-2000 » 27-12-2001

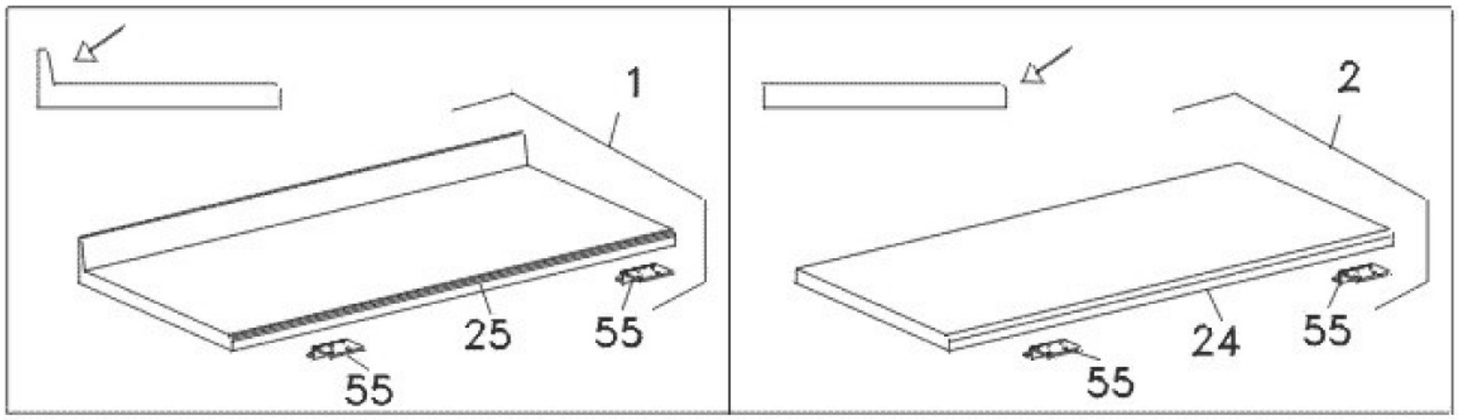

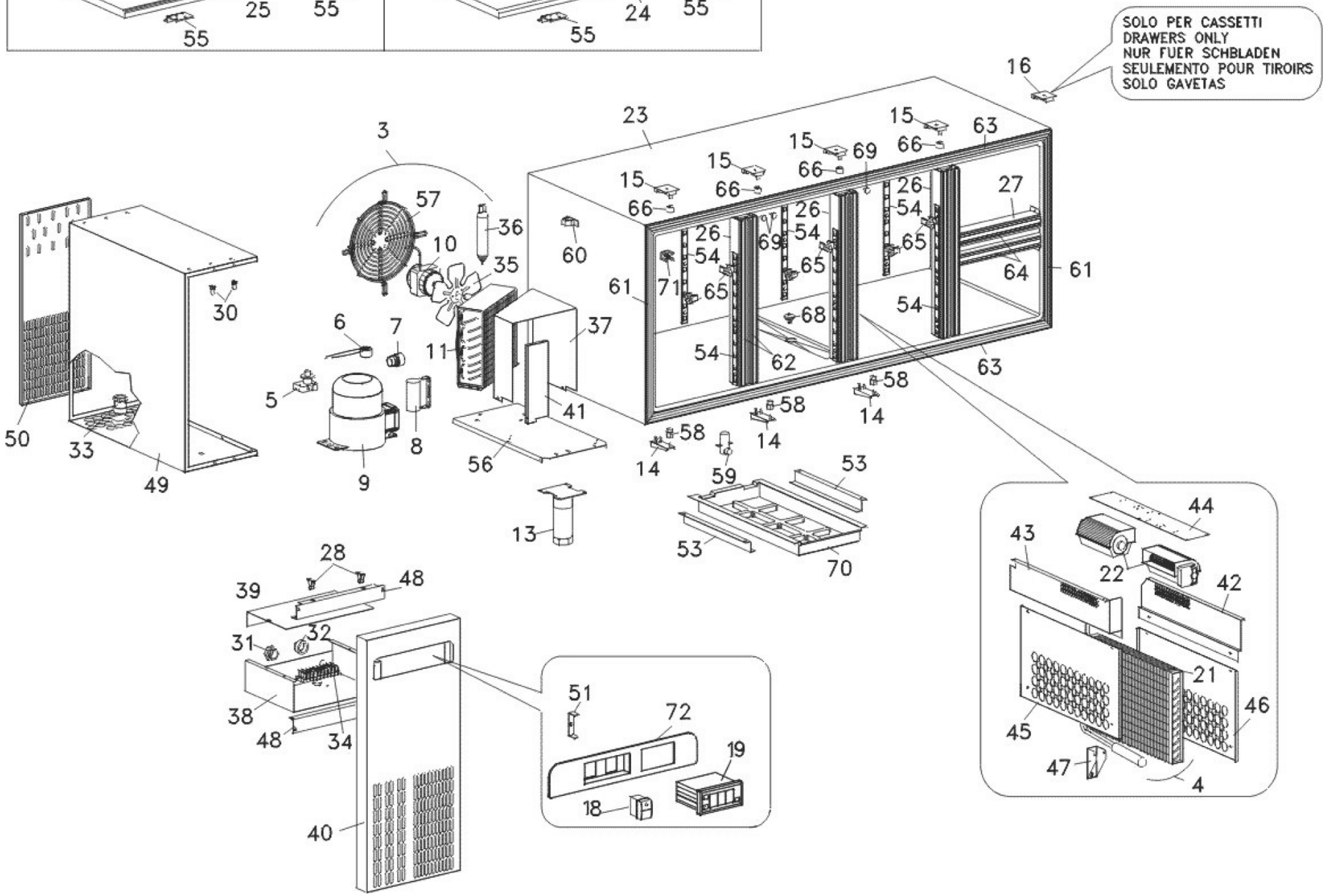

Modello Typ Model Modele Modelo

		EXM1A EXM1A/X EXM1A/A	EXM1A/2 EXM1A/2X EXM1A/2A	EXM1B EXM1B/X EXM1B/A	EXM1B/2 EXM1B/2X EXM1B/2A	EXM1B/4 EXM1B/4X EXM1B/4A	EXM1C EXM1C/X EXM1C/A	EXM1C/2 EXM1C/2X EXM1C/2A	EXM1C/4 EXM1C/4X EXM1C/4A	EXM1C/6 EXM1C/6X EXM1C/6A
Porte Ture Doors Portes Portas Gabetas	SX	1	1	2	2	1	3	3	2	1
	DX	1	...	1	...	...	1	...	...	...

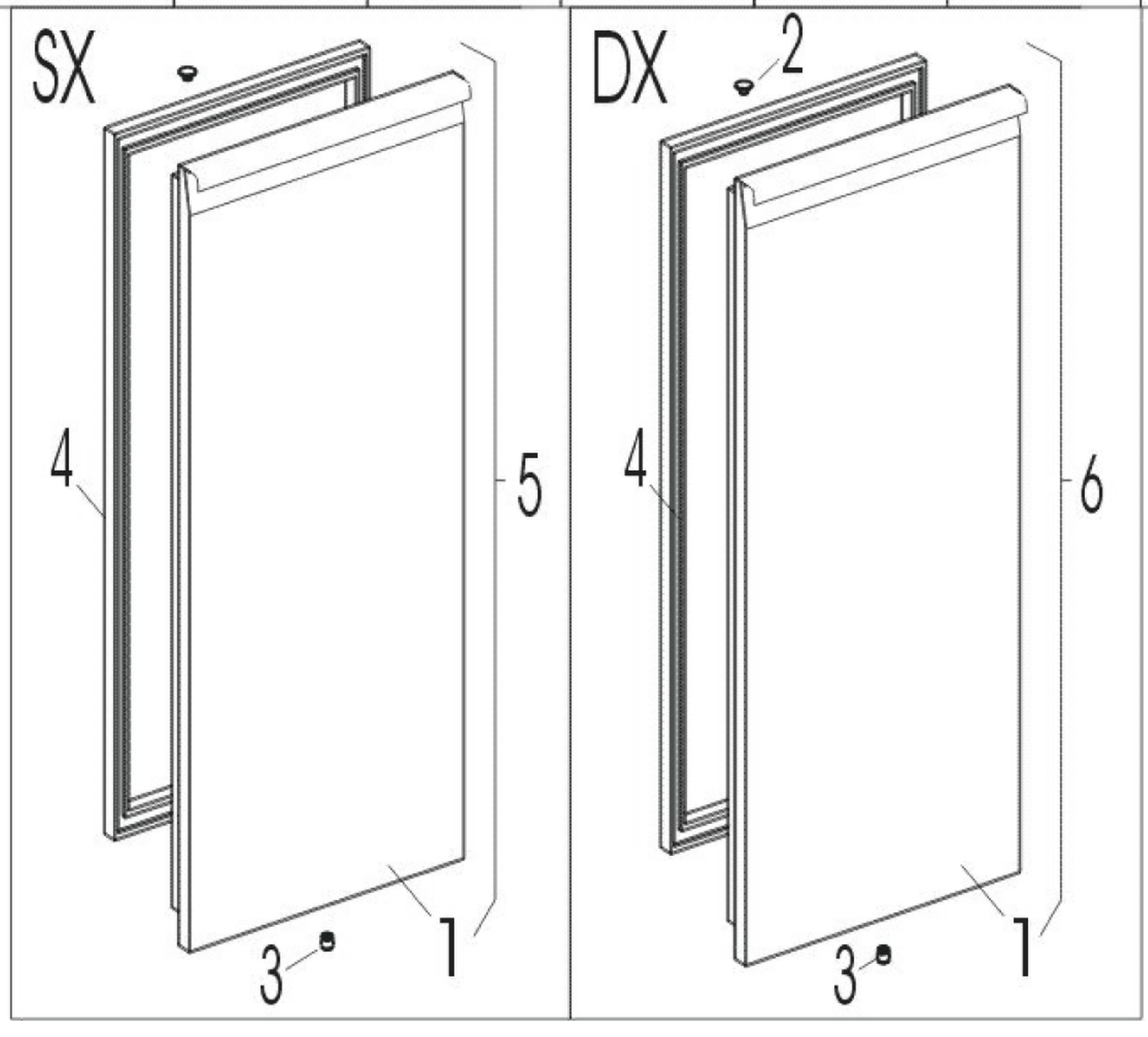

Modello Typ Model Modele Modelo

		EXM1A EXM1A/X EXM1A/A	EXM1A/2 EXM1A/2X EXM1A/2A	EXM1B EXM1B/X EXM1B/A	EXM1B/2 EXM1B/2X EXM1B/2A	EXM1B/4 EXM1B/4X EXM1B/4A	EXM1C EXM1C/X EXM1C/A	EXM1C/2 EXM1C/2X EXM1C/2A	EXM1C/4 EXM1C/4X EXM1C/4A	EXM1C/6 EXM1C/6X EXM1C/6A
Num. Cassetti Schublad Drawers Tiroirs Gabetas	1/2	-	2	-	2	4	-	2	4	6

