	TABLE	REV
	KI9114	00

OPTIONAL ASCIUGAT. K11 (6 Kw)

OPTIONAL DRYING K11 (6 Kw)

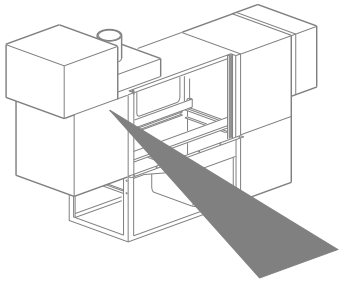

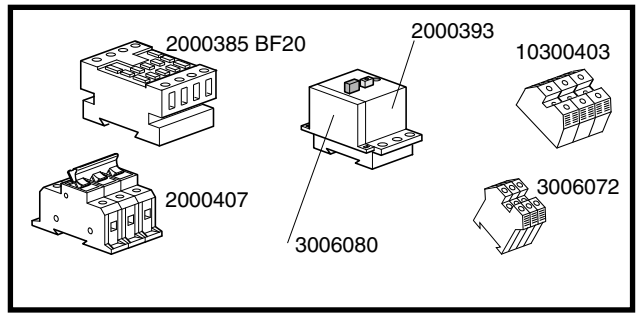

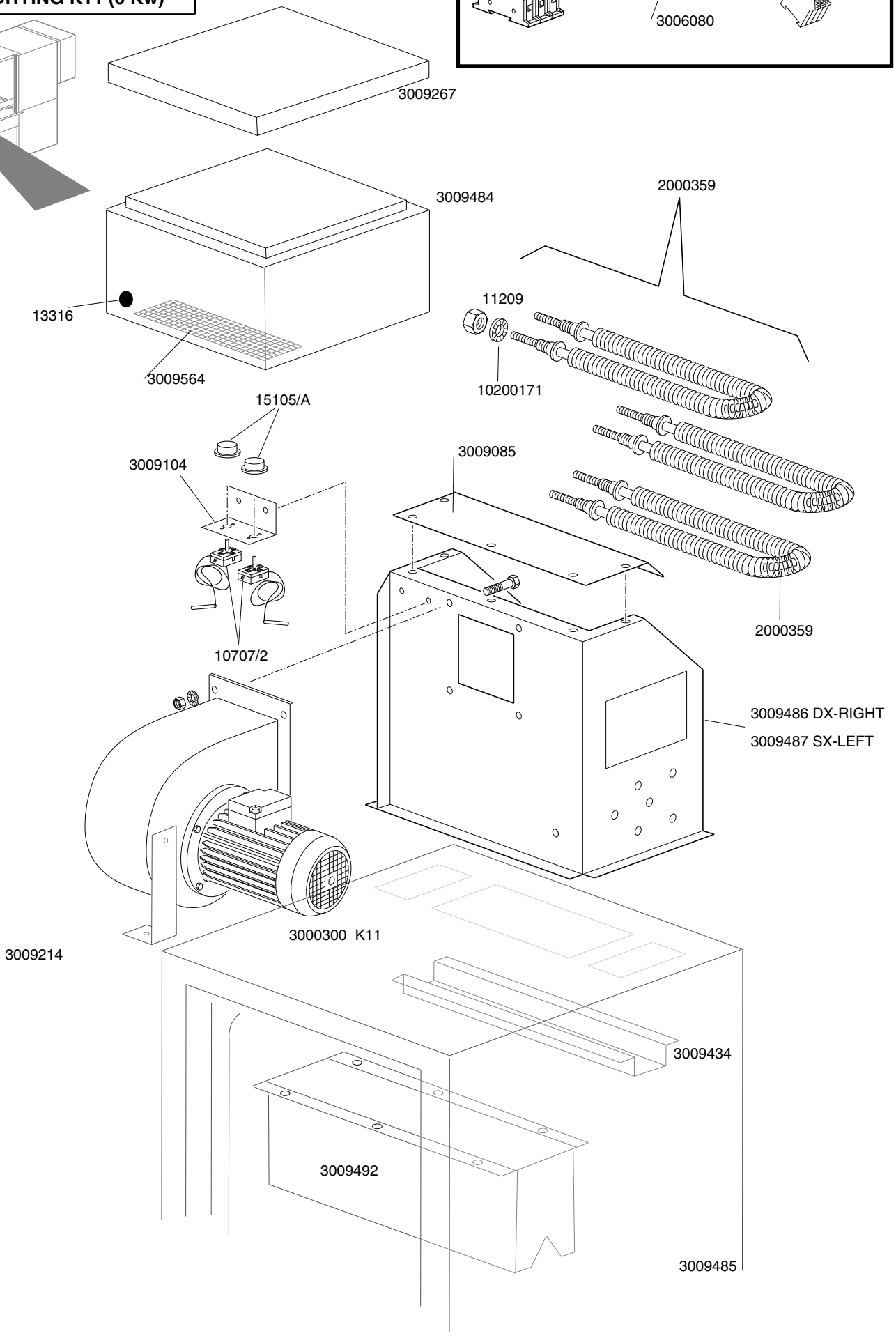

OPTIONAL DRYING K11

TABLE KI9114

CODE	DESCRIPTION	CODE	DESCRIPTION
11209	M6 brass nut		
13316	43x10 blind gasket		
2000359	2000W drying heating element		
2000385	Remote control switch		
2000393	2-3 2A thermal protection		
2000407	Magnetothermic switch		
3000300	552 1HP motorfan		
3006072	4 MMQ double clamp		
3006080	Auxil contact LMS 25		
3009085	Cover conveyor		
3009104	Thermostat support		
3009214	Superior ventil.holder		
3009267	Cover carter group		
3009434	Omega for aspiration		
3009484	Complete superior body		
3009485	Complet lower body		
3009486	Right air conveyor with heating element		
3009487	Left air conveyor with heating element		
3009492	Complete feedbox		
3009564	Aspiration net		
10200171	17x27x2 Absestos rubber gasket		
10300403	6 MM2 clamp		
10702/2	0-90° TR2 thermostat with shaft		
15105/A	0-90° thermostat handle		