Mod./Type:	_70/... - _90/... FRE13 - _70/... - _90/... FRE17 - _90/... FRE21 EXTREME	cod./num.	2531859.00
		data/date:	19/09/2014

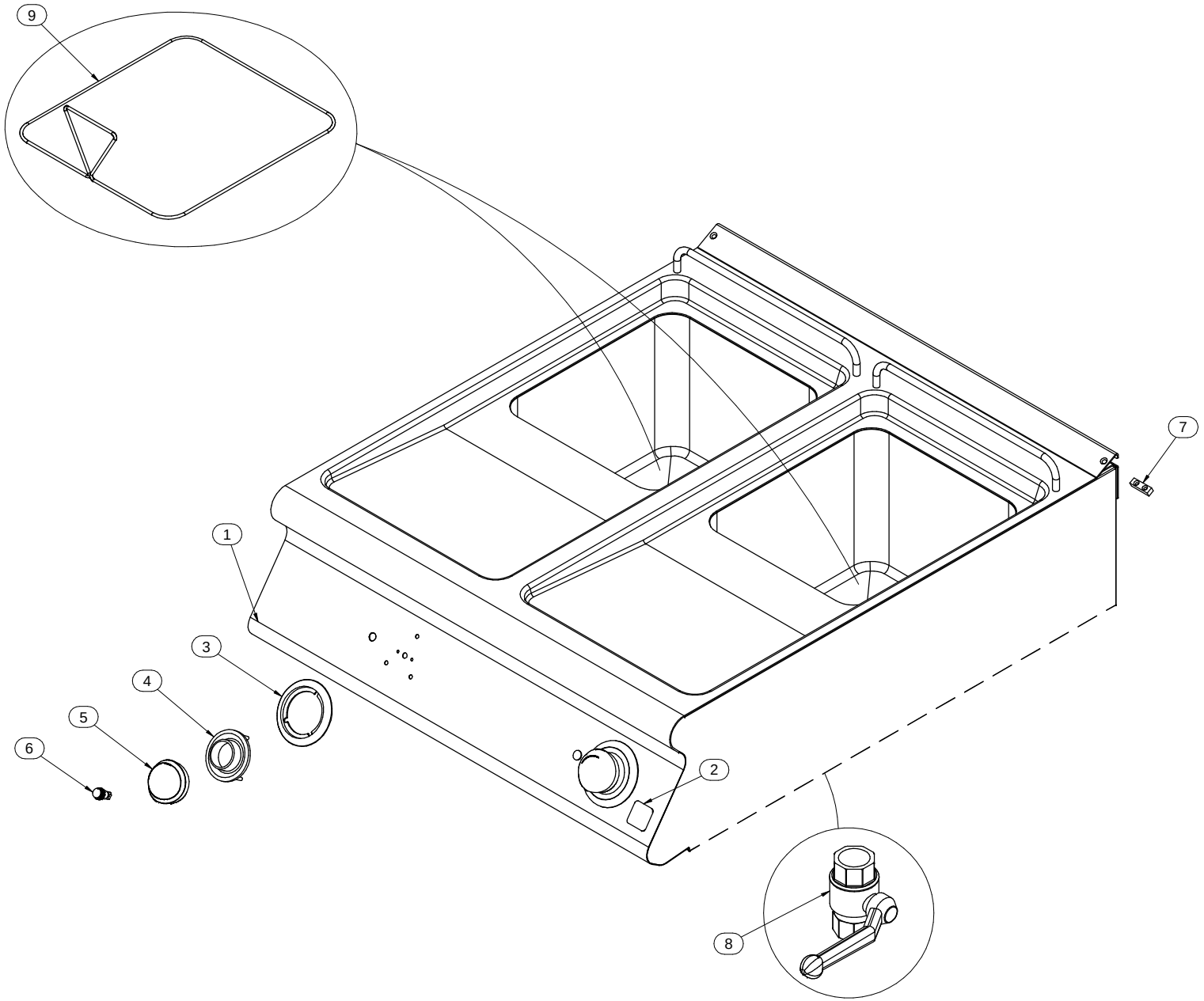

Mod./Type: **_70/... FRE13 - ...FRE17 - _ 90/... FRE13 - ...FRE17 - ...FRE21 EXTREME**

cod./num. 2531861.00

data/date: 19/09/2014

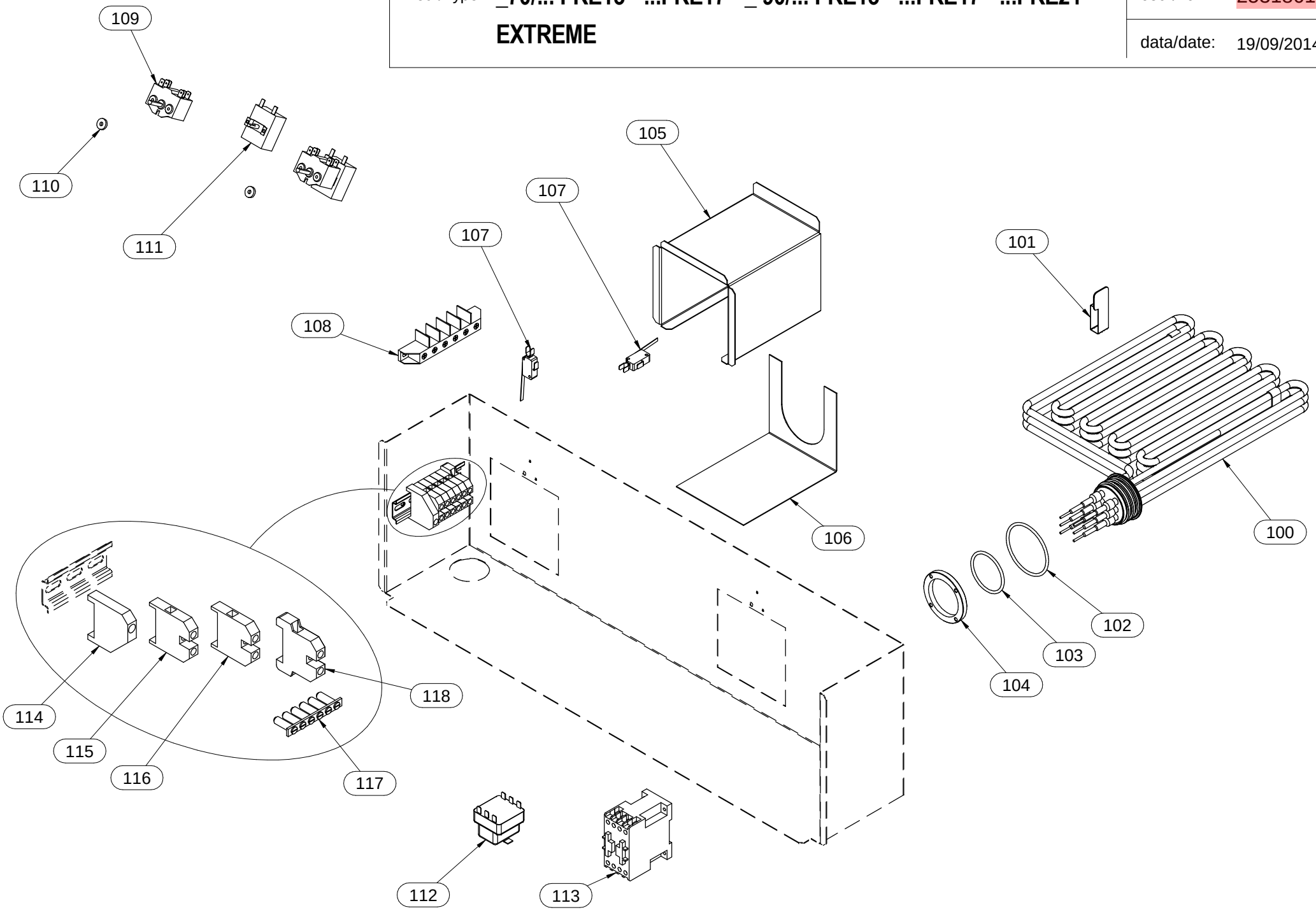

Mod./Type: **EM70 - EM90 .../40 ... - .../80 ... - .../120 ...**

EM90/160 ... VANO / CABINET

cod./num. 2531578.00

data/date: 05/06/2014

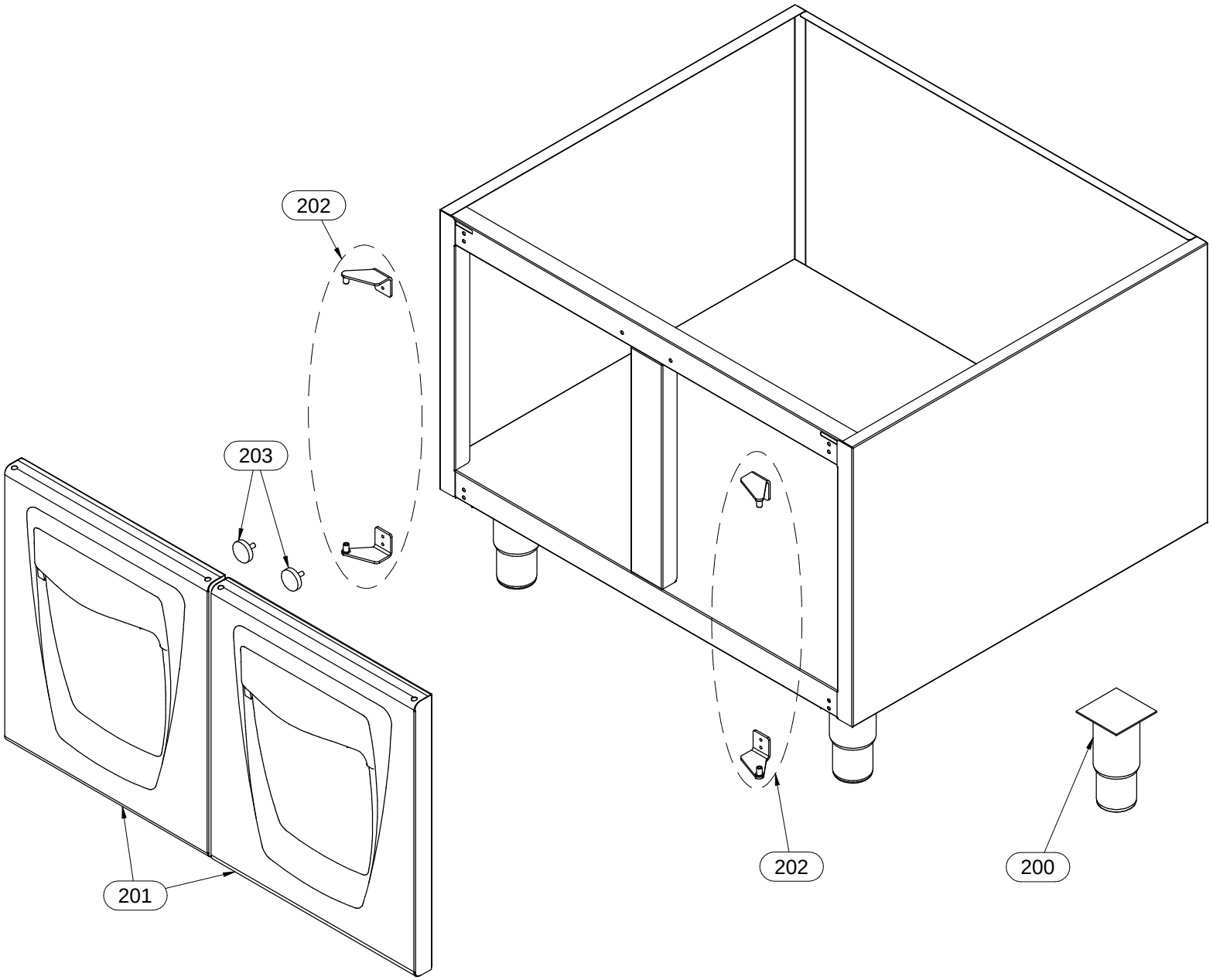

Mod.:	_70/... - _90/... FRE... EXTREME			cod. / num. 2531860.00 data / date 19/09/2014 rif. / ref. 2531859.00		EM70/40 FRE13	EM70/80 FRE13	EM70/40 FRE17	EM70/80 FRE17	EM90/40 FRE13	EM90/80 FRE13	EM90/40 FRE17	EM90/80 FRE17	EM90/40 FRE21	EM90/80 FRE21	NOTE	
POS.	DESCRIZIONE	DESCRIPTION	DENOMINATION	BENENNUNG	COD.	Q.ty											
1	CRUSCOTTO	CONTROL PANEL	BANDEAU	BEDIENBLENDE	6111165.13	1		1		1		1		1			
					6111166.13		1		1		1		1		1		
2	MARCHIO	BRAND NAME	MARQUE	MARKENZEICHEN	982.021.00	1	1	1	1	1	1	1	1	1	1	FROM: 15.12.2011	TO: 31.01.2014
					982.023.00	1	1	1	1	1	1	1	1	1	1	FROM: 01.02.2014	TO:...
3	SERIGRAFIA	SCREEN PRINT	SÉRIGRAPHIE	SIEBDRUCK	910.174.00	1	2	1	2	1	2	1	2	1	2		
4	LABIRINTO	LABYRINTH	LABYRINTHE	LABYRINTH	256.235.00	1	2	1	2	1	2	1	2	1	2		
5	MANOPOLA	KNOB	BOUTON	DREHKNOPF	256.234.00	1	2	1	2	1	2	1	2	1	2		
6	LAMPADA SPIA ARANCIO	ORANGE INDICATOR LIGHT	LAMPE TEMOIN ORANGE	ORANGE KONTROLLAMPE	963.013.00	1	2	1	2	1	2	1	2	1	2		
7	PIASTRINA GIUNZIONE	FIXING PLATE	PLAQUETTE FIXAGE	BEFESTIGUNGSPLATTE	941.130.00	1	1	1	1	1	1	1	1	1	1		
8	VALVOLA	VALVE	SOUPAPE	VENTIL	678.007.00	1	2	1	2	1	2	1	2	1	2		
9	FILTRO	FILTER	FILTER	FILTER	683.096.00	1	2			1	2						
					983.048.00			1	2			1	2				
					983.045.00									1	2		
10																	
11																	
12																	
13																	
14																	
15																	
16																	
17																	
18																	
19																	
20																	
21																	
22																	
23																	
24																	
25																	
26																	
27																	
28																	
29																	
30																	
31																	
32																	
33																	
34																	
35																	
36																	
37																	

Mod.:	_70/… FRE... - _90/… FRE… EXTREME			cod. / num. 2531862.00 data / date 18/09/2014 rif. / ref. 2531645.00		_70/40 FRE13	_70/80 FRE13	_70/40 FRE17	_70/80 FRE17	_90/40 FRE13	_90/80 FRE13	_90/40 FRE17	_90/80 FRE17	_90/40 FRE21	_90/80 FRE21	NOTE
POS.	DESCRIZIONE	DESCRIPTION	DENOMINATION	BENENNUNG	COD.	Q.ty										
100	RESISTENZA	HEATING ELEMENT	RESISTANCE	HEINZELEMENT	665.101.00	1	2			1	2					
					665.100.00			1	2			1	2			
					965.065.00									1	2	
101	ATTIVATORE MICRO	MICRO ACTIVATOR	ACTIVATEUR MICRO	AKTIVATOR MICRO	6221086.00	1	2	1	2	1	2	1	2	1	2	
102	GUARNIZIONE	WASHER	GUARNITURE	DICHTUNGSRING	653.018.00	1	2	1	2	1	2	1	2	1	2	
103	GUARNIZIONE	WASHER	GUARNITURE	DICHTUNGSRING	653.017.00	1	2	1	2	1	2	1	2	1	2	
104	GHIERA	FERRULE	VIROLE	NUTMUTTER	256.377.00	1	2	1	2	1	2	1	2	1	2	
105	PROLUNGA	EXTENSION	RALLONGE	VERLÄNGERUNGSKABEL	256.376.00	-	-	-	-	1	2	1	2	1	2	
106	CHIUSURA	LOCK	FERMETURE	SCHLUSS	9221331.15	-	-	-	-	1	2	1	2	1	2	
107	MICROINTERRUTTORE	MICROSWITCH	MICROINTERRUPTEUR	SICHERUNGSSCHALTER	761.004.00	1	2	1	2	1	2	1	2	1	2	
108	MORSETTIERA	TERMINAL BOARD	BORNES	KLEMMENBRETT	M566050500	1	1	1	-	1	1	1	-	1	-	
109	COMMUTATORE	CHANGE-OVER SWITCH	COMMUTATEUR	UMSCHALTER	661.093.00	1	2	1	2	1	2	1	2	1	2	
110	GUARNIZIONE	WASHER	GUARNITURE	DICHTUNGSRING	953.020.00	1	2	1	2	1	2	1	2	1	2	
111	TERMOSTATO	THERMOSTAT	THERMOSTAT	THERMOSTAT	961.034.00	1	2	1	2	1	2	1	2	1	2	
112	TERMOSTATO SICUREZZA	SAFETY THERMOSTAT	THERMOSTAT DE SECURITE	TEMPERATURBEGRENZER	961.033.00	1	2	1	2	1	2	1	2	1	2	
113	CONTATTORE	CONTACTOR	CONTACTEUR	FERNSCHALTER	461.021.00	2	4			2	4					
					961.002.00			2	4			2	4			
					961.005.00									2	4	
114	BLOCCAMORSETTI	TERMINAL STOPPER	BORNE BLOQUANT	BLÖCK-KLEMME	663.059.00	-	-	-	1	-	-	-	1	-	1	
115	MORSETTO	TERMINAL	BORNE	KLEMME	663.061.00	-	-	-	5	-	-	-	5	-	5	
116	MORSETTO BLU	BLUE TERMINAL	BORNE BLUE	NULL-KLEMME	663.076.00	-	-	-	1	-	-	-	1	-	1	
117	BARRETTE COLLEGAMENTO	CONNECTOR PIN	BARRETTE DE CONNECTION	VERBINDUNG-STAB	663.056.00	-	-	-	1	-	-	-	1	-	1	
118	MORSETTO TERRA - PE	PE-TERMINAL	BORNE PE	ERD-KLEMME	663.060.00	-	-	-	1	-	-	-	1	-	1	
119																
120																
121																
122																
123																
124																
125																
126																
127																
128																
129																
130																
131																
132																
133																
134																
135																

Mod.:	EM70/... - EM90/… VANO / CABINET			cod. / num. 2531579.00 data / date 05/06/2014 rif. / ref. 2531578.00		EM70/40 ...	EM70/80 ...	EM70/120 ...	EM90/40 ...	EM90/80 ...	EM90/120 ...	EM90/160 ...	NOTE	
POS.	DESCRIZIONE	DESCRIPTION	DENOMINATION	BENENNUNG	COD.	Q. ty								
200	PIEDINO	FOOT	PIED	STELLFUSS	912.090.00	4	4	4	4	4	4	6	FROM: 15.12.2011	TO: 17.05.2013
					912.090.14	4	4	4	4	4	4	6	FROM: 18.05.2013	TO:...
201	PORTA	DOOR	PORTE	TÜR	256.215.00	1	2	3	1	2	3	4		
202	COPPIA CERNIERE	GASKETS PAIR	COUPLE CHARNIÈRES	SCHARNIERPAAR	256.216.00	1	2	3	1	2	3	4		
203	MAGNETE	MAGNET	MAGNÉTO	MAGNET	684.007.00	1	2	3	1	2	3	4	FROM: 15.12.2011	TO: 01.01.2014
					984.006.00	1	2	3	1	2	3	4	FROM: 02.01.2014	TO:...
204														
205														
206														
207														
208														
209														
210														
211														
212														
213														
214														
215														
216														
217														
218														
219														
220														
221														
222														
223														
224														
225														
226														
227														
228														
229														
230														
231														
232														
233														
234														