ARMARIO DE REFRIGERACIÓN PARA PESCADO O PASTELERÍA CONCEPT / CABINET COOLING CONCEPT FOR FISH OR PASTRY

CAP-701 19029779

CAPP-701 19029777

FAGOR

Versión 2014-10

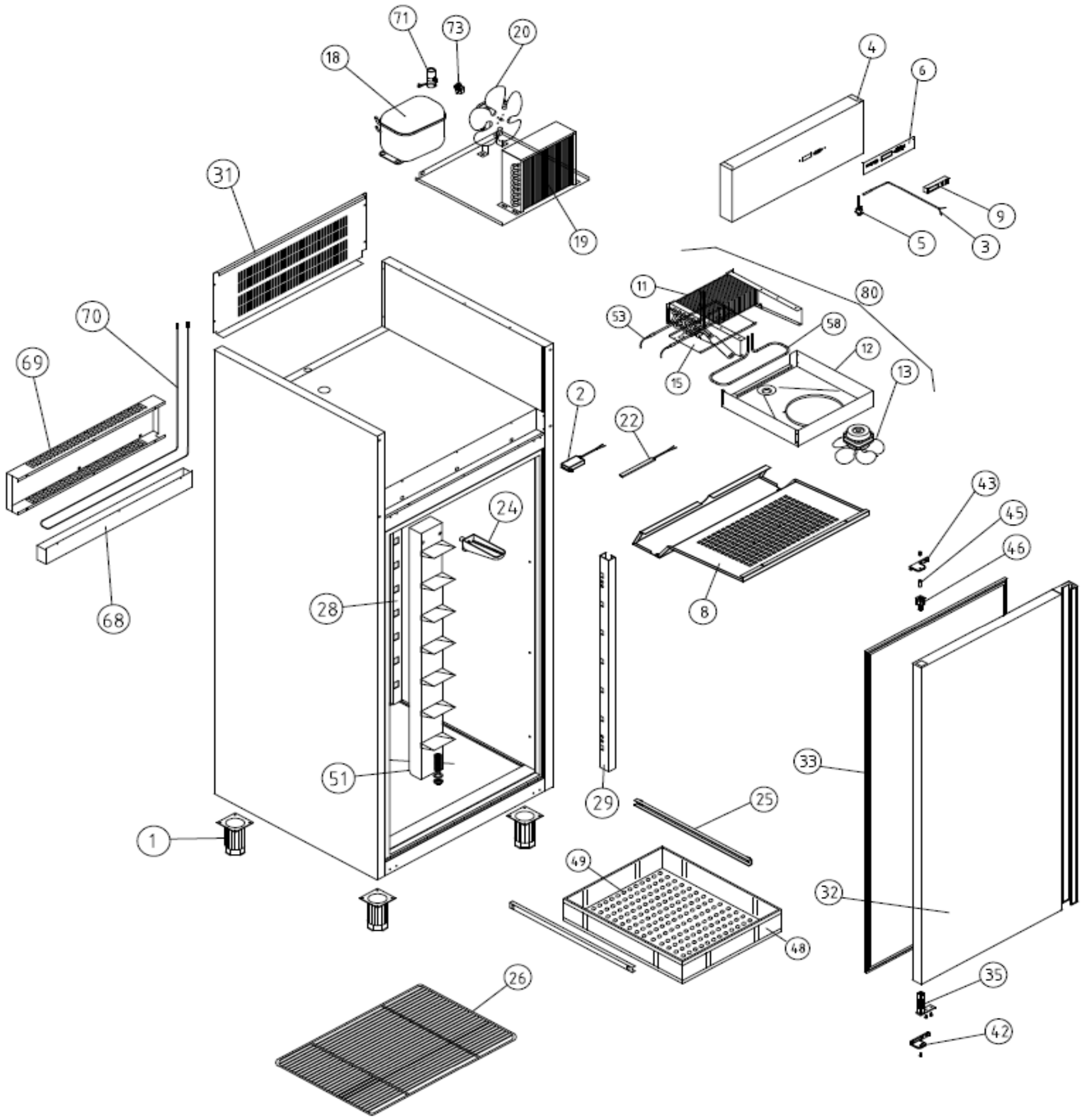

ARMARIO DE REFRIGERACIÓN PARA PESCADO CONCEPT / CABINET COOLING CONCEPT FOR FISH

CAP-701 19029779

FAGOR

Versión 2014-10

Nº	CODE CÓDIGO	RECOM.	DESCRIPCIÓN	DESCRIPTION	CAP-701
1	12033566		PATA REGULABLE ARM.GASTRO	GASTRO CABINET ADJUSTABLE LEG	4
2	12103609		FUENT APV-16-24 115-230 50/60Hz 24V 16W	APV-16-24 115-230 50/60Hz 24V 16W SOURCE	1
3	12045530		SONDA NTC 2,5 MTS	THERMOSTAT PROBE	2
4	12116403		CABEZA AP-APP 700 CONCEPT	HEAD AP-APP 700 CONCEPT	1
5	12101812		MICRO. CONMUT. HH3141CA	MICRO. CONMUT. HH3141CA	1
6	12104752		ADHESIVO G. CONCEPT PWC	PWC CONCEPT RANGE STICKER	1
8	12116808		TAPA EVAPORADOR ARM. AP/APP CONCEPT	EVAPORATOR COVER ARM. AP/APP CONCEPT	1
9	12040693		TERMOSTATO POWER COMPAC CONG.	FREEZER POWER COMPACT THERMOSTAT	1
11	12046898		BAT.6T4R 300A 6S.PINT	BAT.6T4R 300A 6S.PINT	1
12	12070030		SUJ.VENT.AFP-700,800 COMPACTO	SUJ.VENT.AFP-700,800 COMPACTO	1
13	12034545		VENTIL.EVAPOR.5W S/ARO S/PATAS	VENTIL.EVAPOR.5W S/ARO S/PATAS	1
15	12044961		CUBRER.EVAP.FC61B ARM.COMPACTO	CUBRER.EVAP.FC61B ARM.COMPACTO	1
18	12046686		COMP.NEK6210Z EMB	COMP.NEK6210Z EMB	1
19	12032340		CONDENSADOR 9x3 FAGC0021	CONDENSADOR 9x3 FAGC0021	1
20	12033477		VENTILADOR 10W PATA PALA 220V	10W 220V MOTOR WITH LEG AND FAN	1
22	12117149		TIRA LED T3-270-3014-868.16-CW24V DC 2mt	T3-270-3014-868.16-CW24V DC 2mt LED STRIP	1
24	12037314		CANALIZ AGUA 150 NEGRO CONG	FREEZER BLACK 150 WATER DRAINAGE	1
25	12036689		GUIA AP Y APP EN L 485 MM	GUIDE AP AND APP L 485 mm	14
28	12033613		CREM.RESP.AP,APP-701 GAMA 2006	CREM.RESP.AP,APP-701 GAMA 2006	2
29	12033464		CREM.COST.AP,APP-701 GAMA 2006	CREM.COST.AP,APP-701 GAMA 2006	2
31	12069846		RESP.REJ.MOTOR AP,APP 2006	RESP.REJ.MOTOR AP,APP 2006	1
32	12083614		PUERT APP/AP IZQ.CONCEPT	CONCEPT LEFT OPEN APP/AP DOOR	1
33	12034273		BURLETE AP-APP	AP-APP GASKET DOOR	1
35	12038130		BIS.TRS1D DOBL MUELLE DV-2608	DOUBLE SPRING HINGE TRS1D DV-2608	1
42	12036986		SOP.BISAG.INF.IZD.	LEFT LOW HINGE SUPPORT	1
43	12041474		SOPORTE SUPERIOR BISAGRA IZQUIERDO	LEFT TOP HINGE SUPPORT	1
45	12038076		EJE SUP. PUERTAS 30x10 VARILLA INOX.INT. M-6	SUP HUB. 30x10 ROD DOORS INOX.INT. M-6	1
46	12037723		CAJA ALOJAMIENTO MUELLE GRIS	GREY SPRING HOUSING BOX	1
48	12033925		CUBETA ASA GRIS 600X400X120	ASA GRAY BUCKET 600X400X120	7
49	12033305		FONDO PERF. CUB. 600x400	BACKGROUND PERF. CUB. 600x400	7
51	12083557		CANALIZADOR AP-701	CHANNELER AP-701	1
53	12034637		RESIST.R17 350W CABLE1MT.	RESIST.R17 350W CABLE1MT.	1
58	12036313		RESIST.BANDEJA 700-20W	RESIST.BANDEJA 700-20W	1
68	12034715		BAND.EVAP.AUT.AFP-GN	BAND.EVAP.AUT.AFP-GN	1
69	12069844		TAP.BAND.EV.AUT.AP,APP701	TAP.BAND.EV.AUT.AP,APP701	1
70	12038150		RESIST.EVAP.AUT.80W 3MT	RESIST.EVAP.AUT.80W 3MT	1
71	12040120		CONDENSADOR COMP. NEK 6210Z	CONDENSADOR COMP. NEK 6210Z	1
73	12036939		RELE ARRAN. COMP. NEK 6210Z	RELE ARRAN. COMP. NEK 6210Z	1
80	12116747		UND. EVAP. AP-701	AP-701 EVAPORATION UNIT	1

ARMARIO DE REFRIGERACIÓN PARA PASTELERÍA CONCEPT / CABINET COOLING CONCEPT FOR PASTRY

CAPP-701 19029777

FAGOR

Versión 2014-10

Nº	CODE CÓDIGO	RECOM.	DESCRIPCIÓN	DESCRIPTION	CAPP-701
1	12033566		PATA REGULABLE ARM.GASTRO	GASTRO CABINET ADJUSTABLE LEG	4
2	12103609		FUENT APV-16-24 115-230 50/60Hz 24V 16W	APV-16-24 115-230 50/60Hz 24V 16W SOURCE	1
3	12045530		SONDA NTC 2,5 MTS	THERMOSTAT PROBE	1
4	12116403		CABEZA AP-APP 700 CONCEPT	HEAD AP-APP 700 CONCEPT	1
5	12036888		MICROR.CONMUT.E3111CA	MICROR.CONMUT.E3111CA	1
6	12104752		ADHESIVO G. CONCEPT PWC	PWC CONCEPT RANGE STICKER	1
8	12116808		TAPA EVAPORADOR ARM. AP/APP CONCEPT	EVAPORATOR COVER ARM. AP/APP CONCEPT	1
9	12067649		TERMOSTATO POWER COMPAC TROPICAL	TROPICAL POWER COMPACT THERMOSTAT	1
11	12031794		BAT.6T4R300A4S PINT	BAT.6T4R300A4S PINT	1
12	12070030		SUJ.VENT.AFP-700,800 COMPACTO	SUJ.VENT.AFP-700,800 COMPACTO	1
13	12034545		VENTIL.EVAPOR.5W S/ARO S/PATAS	VENTIL.EVAPOR.5W S/ARO S/PATAS	1
15	12044961		CUBRER.EVAP.FC61B ARM.COMPACTO	CUBRER.EVAP.FC61B ARM.COMPACTO	1
18	12046686		COMP.NEK6210Z EMB	COMP.NEK6210Z EMB	1
19	12032340		CONDENSADOR 9x3 FAGC0021	CONDENSADOR 9x3 FAGC0021	1
20	12033477		VENTILADOR 10W PATA PALA 220V	10W 220V MOTOR WITH LEG AND FAN	1
22	12117149		TIRA LED T3-270-3014-868.16-CW24V DC 2mt	T3-270-3014-868.16-CW24V DC 2mt LED STRIP	1
24	12037375		CANALIZADOR AGUA 150 GRIS REFRIGERACION	REFRIGERATION GREY 150 WATER DRAINAGE	1
25	12036689		GUIA AP Y APP EN L 485 MM	GUIDE AP AND APP L 485 mm	6
26	12034886		PARRILLA PASTEL.600X400 EPOXI	PARRILLA PASTEL.600X400 EPOXI	3
28	12035877		CREMALL.RESP.PASTELERÍA APP	CREMALL.RESP.PASTELERÍA APP	2
29	12036135		CREMALL.COST.PASTELERÍA APP	CREMALL.COST.PASTELERÍA APP	2
31	12069846		RESP.REJ.MOTOR AP,APP 2006	RESP.REJ.MOTOR AP,APP 2006	1
32	12083614		PUERT APP/AP IZQ.CONCEPT	CONCEPT LEFT OPEN APP/AP DOOR	1
33	12034273		BURLETE AP-APP	AP-APP GASKET DOOR	1
35	12038130		BIS.TRS1D DOBL MUELLE DV-2608	DOUBLE SPRING HINGE TRS1D DV-2608	1
42	12036986		SOP.BISAG.INF.IZD.	LEFT LOW HINGE SUPPORT	1
43	12041474		SOPORTE SUPERIOR BISAGRA IZQUIERDO	LEFT TOP HINGE SUPPORT	1
45	12038076		EJE SUP. PUERTAS 30x10 VARILLA INOX.INT. M-6	SUP HUB. 30x10 ROD DOORS INOX.INT. M-6	1
46	12037723		CAJA ALOJAMIENTO MUELLE GRIS	GREY SPRING HOUSING BOX	1
68	12034715		BAND.EVAP.AUT.AFP-GN	BAND.EVAP.AUT.AFP-GN	1
69	12069844		TAP.BAND.EV.AUT.AP,APP701	TAP.BAND.EV.AUT.AP,APP701	1
70	12038150		RESIST.EVAP.AUT.80W 3MT	RESIST.EVAP.AUT.80W 3MT	1
71	12040120		CONDENSADOR COMP. NEK 6210Z	CONDENSADOR COMP. NEK 6210Z	1
73	12036939		RELE ARRAN. COMP. NEK 6210Z	RELE ARRAN. COMP. NEK 6210Z	1
80	12116301		UND.EV. AFP-700,800,APP	AFP-700,800 EVAPORATION UNIT	1

Notes: