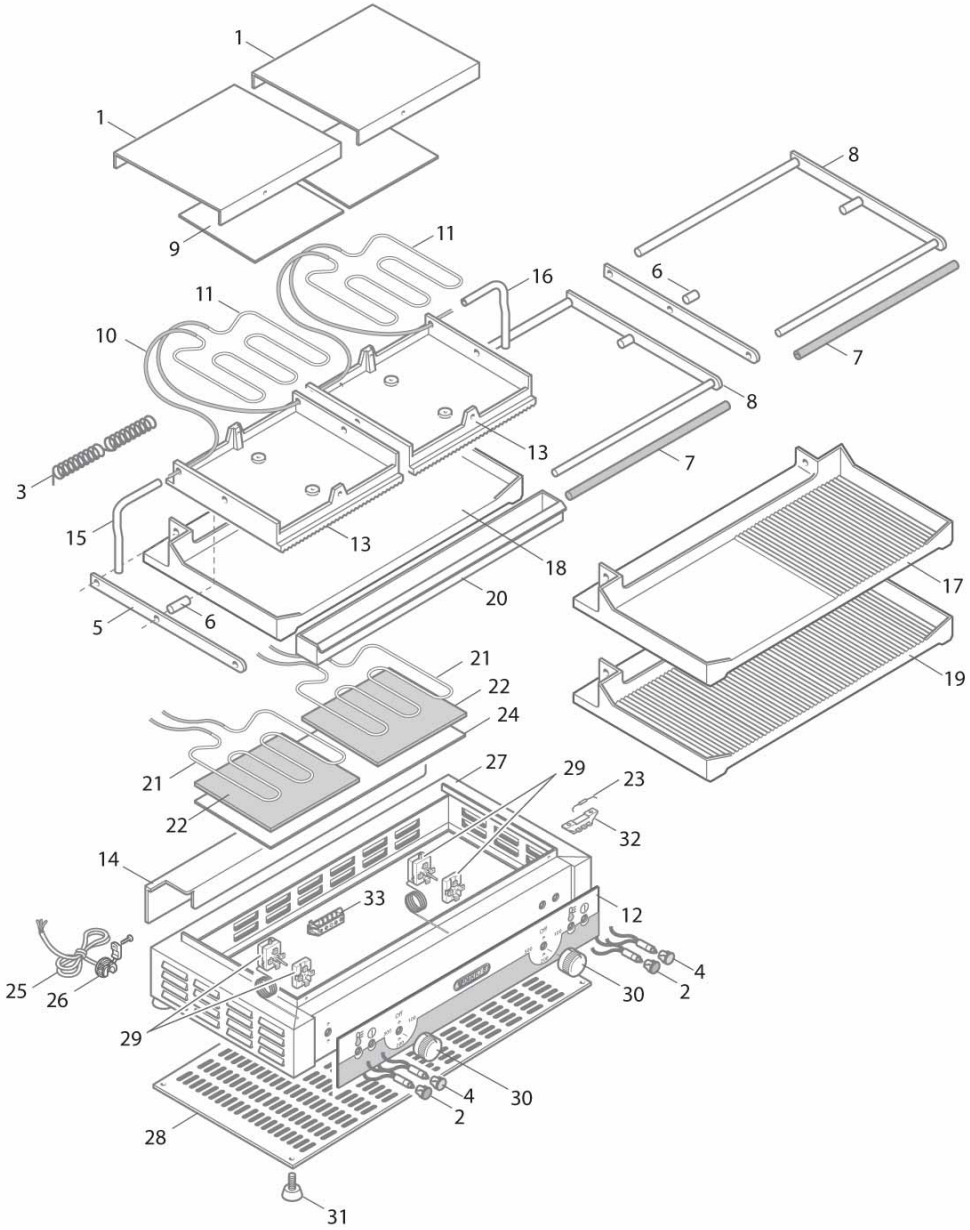
1
1
9
11
11
10
3
15
5
6
16
13
13
18
20
8
6
7
8
7
17
19
21
22
24
21
22
27
29
23
32
14
33
12
4
2
30
25
26
29
4
2
30
28
31

PDM/LD

Pos. Item	Codice Code	Descrizione	Item Description	Designation articles	Artikelbeschreibung	Decripciòn artìculos	N° pezzi - No. pieces					
1	30804200	Coperchio ps/pd-ld	Lid ps/pd-ld	Couvercle ps/pd-ld	Deckel ps/pd-ld	Tapa ps/pd-ld						2
2	30168500	Spia arancio 230v d.10mmt150Ø	Orange lamp 230v	Temoin lumineux orange 230v	Orange kontrollampe 230v	Piloto naranja 230v						2
3	30612800	Mollax ps-pd/ld ps-pm-pd/st-sx	Spring ps-pd/ld ps-pm-pd/st-sx	Ressort ps-pd/ld ps-pm-pd/st-s	Feder ps-pd/ld ps-pm-pd/st-sx	Muelle para plancha						2
4	30168800	Spia verde 230v d.10mmt150Ø	Green lamp 230v	Temoin lumineux vert 230v	Grune kontrollampe 230v	Piloto verde 230v						2
5	30875700	Manico laterale ps/pm/pd zn	Lateral handle ps/pm/pd zn	Manche latÉral ps/pm/pd zn	Seitlicher griff ps/pm/pd zn	Asa lateral ps/pm/pd zn						2
6	30907800	Perno centrale pd (zincato)	Central pin pd	Pivot central pd	(verzinkt) zentral bolzen pd	Perno central pd						2
7	30875500	Manico moplen rosso pd	Red moplen pin pd	Manche moplen rouge pd	Roter moplen griff pd	Asa moplen roja pd						2
8	30876600	Ass. maniglia pd	Handle assembly pd	Poignee complete pd	Kompletter griff pd	Conjunto asa pd						2
10	30193400	Tubetto vetrotex d.5 l.250 mm	Glass tube	Tube verre	Isolierend kleines rohr fuer	Tubo vidrio						8
11	30022500	Res.compl.700w-230v ps/pd	Compl.heating elem.700w-230v	Resistance complete 700w-230v	Obere heizkoerper 700w 230 v	Resistencia completa 700w-230v						2
12	30899900	Pannello piastra doppia bertos	Berto's adhesive panel	Panneau adhÉsif berto's	Haftendes paneel berto's	Panel adhesivo berto's						1
13	30842500	Fusione cop. rigato ps-pd/ld	Ribbed cast iron lid ps-pd/ld	Couvercle en fonte rainurÉ	Geriefter gussdeckel	Tapa estriada de hierro fundid						2
14	30791200	Carter pdl-pdm-pdr/ld	Casing pdl-pdm-pdr/ld	Carter pdl-pdm-pdr/ld	GehÄuse pdl-pdm-pdr/ld	Carter pdl-pdm-pdr/ld						1
15	30810100	Curvetta passafili dx ps/pm/pd	Rh angle conduit	Conduit de protection cÂbles d	R.gebogenes stÜck drahtfÜhrung	Codo para cables derecho						1
16	30809800	Curvetta passafili sx pd	Lh angle conduit	Conduit de protection cÂbles g	L. gebogenes stÜck drahtfÜhrun	Codo para cables izquierdo						1
17	30842100	Fusione inferiore pdm/ld	Lower mixed cast iron plate	Plaque inf. en fonte mixte	Gemischtes unteres gussstÜck	Placa inf. mixta en hierro fun						1
18	30842300	Fusione inferiore pdl/ld	Lower smooth cast iron plate	Plaque inf. en fonte lisse	Glattes unteres gussstÜck	Placa inf. lisa en hierro fund						-
19	30841800	Fusione inferiore pdr/ld	Lower ribbed cast iron plate	Plaque inf. en fonte rainurÉe	Gerieftes unteres gussstÜck	Placa inf. estriada en hierro						-
20	30791800	Ass.cassetto raccoglisughi ps	Drip tray ps	Bac recueille-sauces ps	Sossen-auffangschale ps	CajÓn colector de jugos ps						1
21	30023500	Res.inf.comp.1000w-230v ps/p	1000w-230v ps/p heating eleme	Resistance 1000w-230v ps/p	Untere heizkoerper 1000 w 230v	Resistencia 1000w-230v ps/p						2
22	30921800	Quadrotto isomart ps/pd-pm/vtr	Isomart panel 210x170x4	Tableau isomart 210x170x4	Isolierender trenner 210x170x4	Panel isomart 210x170x4						2
23	30978000	Termofusibile 167°c ps/pm/pd	Thermofuse 167°c ps/pm/pd	Thermofusible 167°c ps/pm/pd	Thermoschmelzdraht 167°c ps/pm	Termofusible 167°c ps/pm/pd						2
24	30868600	Lastra protez. ferro grande	Large protective sheet	Plaque de protection grande	Grosse schutzplatte	Placa de proteccion grande						1
25	30192600	Cavo 5x2.5 pd/ld-st-sx-vtr	Power supply cable 5 x 2,5mm	Cable d'alimentation 5 x 2,5mm	Versorgungskabel 5 x 2,5mm	Cable de alimentacion 5x2,5 mm						1
26	30185800	Passacavo 6k 130 bs	Cable guide	Passe-cÂble	KabelfÜhrung	Aislador pasapanel 6k 130 bs						1
27	30863700	Ass.involucro base pd/ld-vtr-s	Base enclosure pd/ld-vtr-st-sx	Couverture base pd/ld-vtr-st-s	HÜlle basis pd/ld-vtr-st-sx	Envoltura base pd/ld-vtr-st-sx						1
28	30837500	Fondo per pd/ld-st-sx-vtr	Bottom pd/ld-st-sx-vtr	Fond pd/ld-st-sx-vtr	Boden pd/ld-st-sx-vtr	Fondo pd/ld-st-sx-vtr						1
29	30064600	Termostato 270°c. + commutator	270°c thermostat + cycle selec	Thermostat 270°c + commutateur	Thermostat 270°c + umschalter	Termostato 270°c + conmutador						2
30	35877200	Manopola rossa p. 6x4.6 a o° r	Red knob p. 6x4.6 a o° ral3000	Manette rouge p. 6x4.6 a o° r	Drehknopf p. 6x4.6 a o° ral300	Mando rojo p. 6x4.6 a o° ral30						2
30	35876200	Manopola rossa p. 6x4.6 a o°	Red knob 6x4.6 o° c	Manette rouge 6x4.6 o° c	Drehknopf 6x4.6 o° c	Mando rojo 6x4.6 o° c						2
31	30684100	Piedinoxbanc d.30xm8condado ba	Foot h.6mm	Pied h.6mm	Fuss h.6mm	Pata h.6mm						4
32	30184800	Morsettiera laterale fv 77/3	Lateral terminal board fv 77/3	Bornier latÉral fv 77/3	Seitliche klemmenleiste fv 77/	Bornera lateral fv 77/3						2
33	30184200	Morsettiera a 6 poli fv 122 b	Terminal board 6 poles	Bornier 6 poles	Klemmenleiste	Bornera 6 polos						1