lamber

Dishwashers

Ed.
01/2016

Rev. C

from
01/2008

GS800

SPARE PARTS

045F

CE

lamber	WASH COMPONENTS	MOD. GS800	TAV. 1 C ED. 01/2016

TAV. 1 DI 9

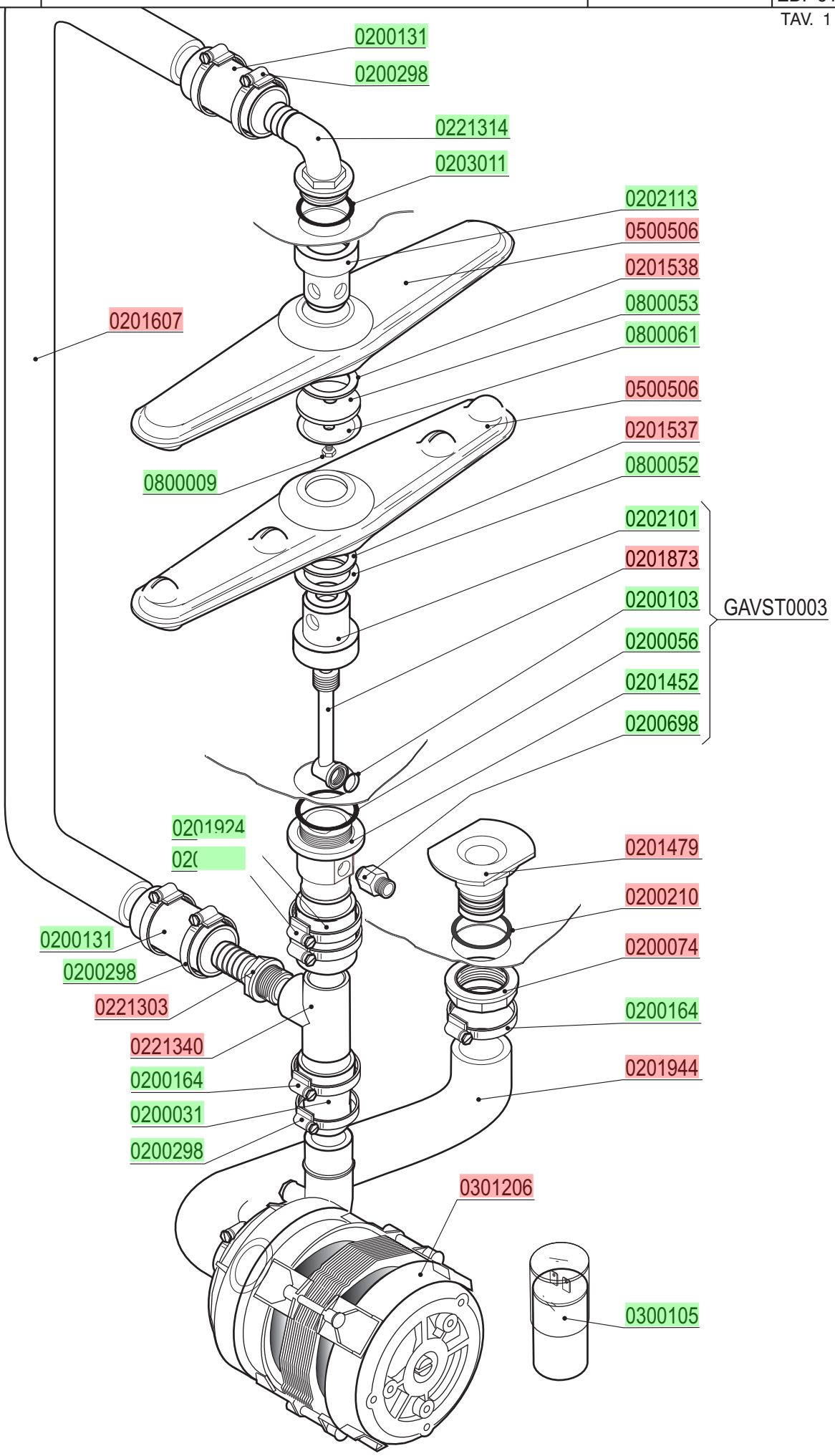

lamber	RINSE COMPONENTS	MOD. GS800	TAV. 2 C ED. 01/2016

TAV. 2 DI 9

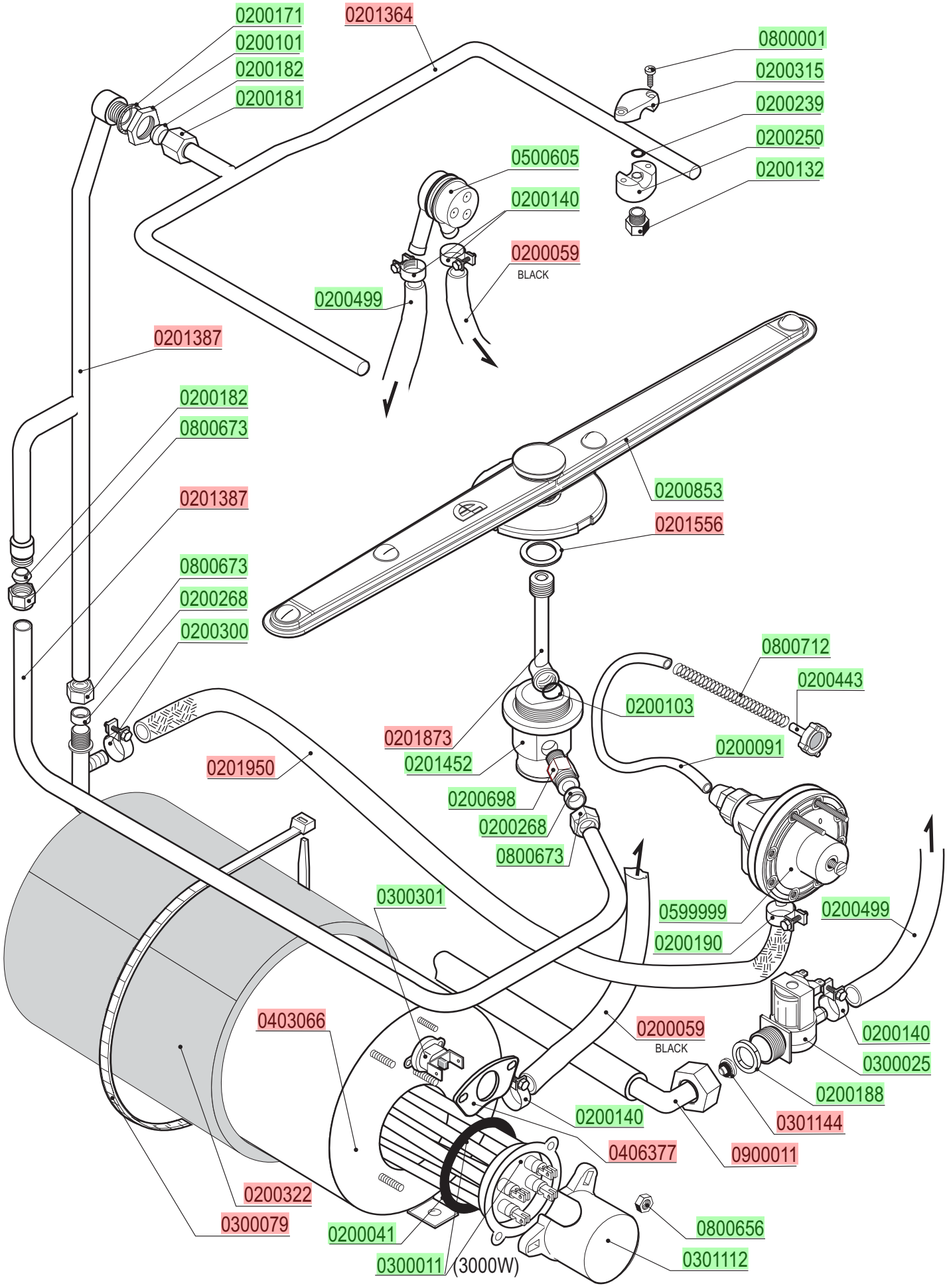

lamber	TANK COMPONENTS	MOD. GS800	TAV. 3 C ED. 01/2016

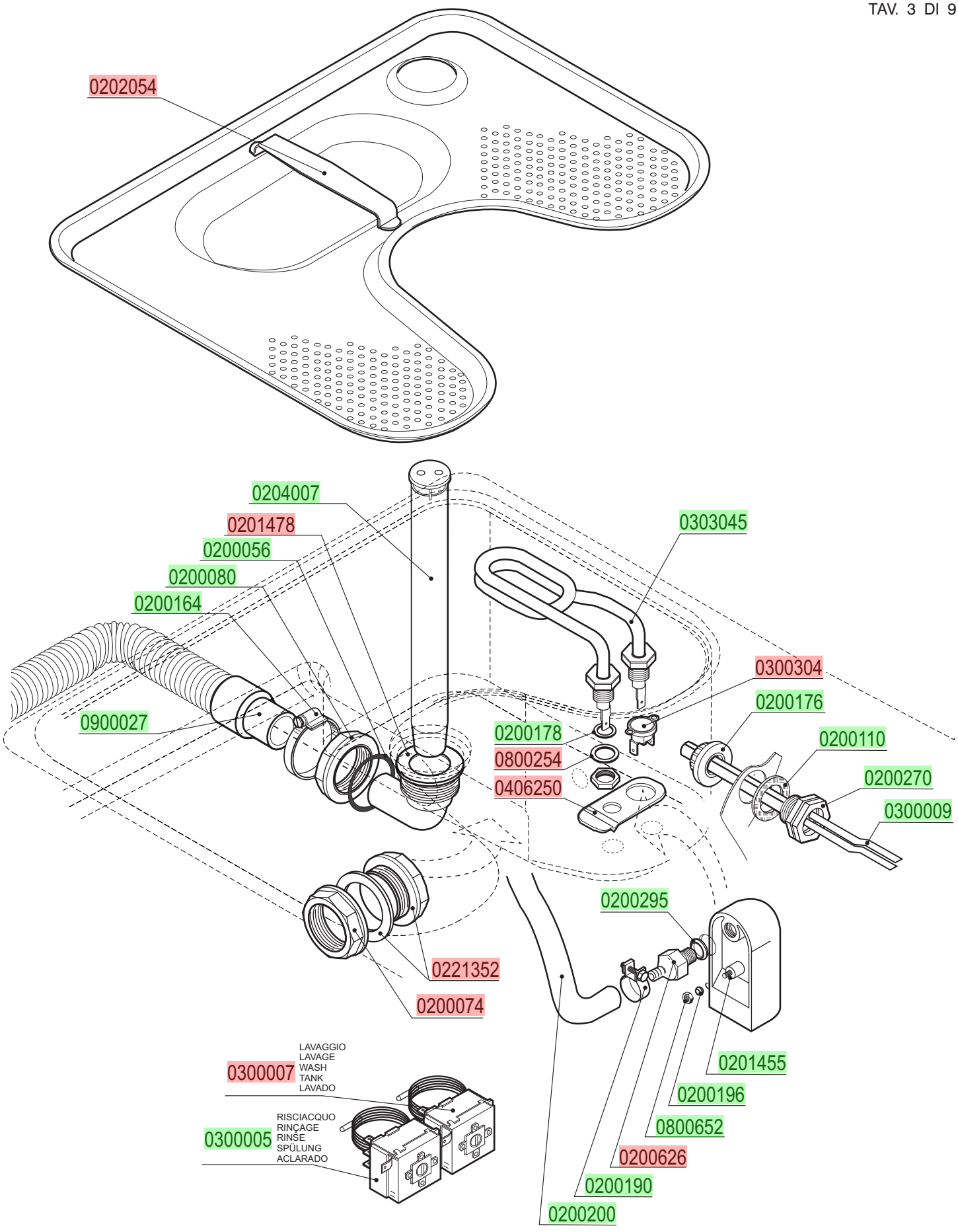

lamber	CONTROL BOX	MOD. GS800	TAV. 4 C ED. 01/2016

TAV. 4 DI 9

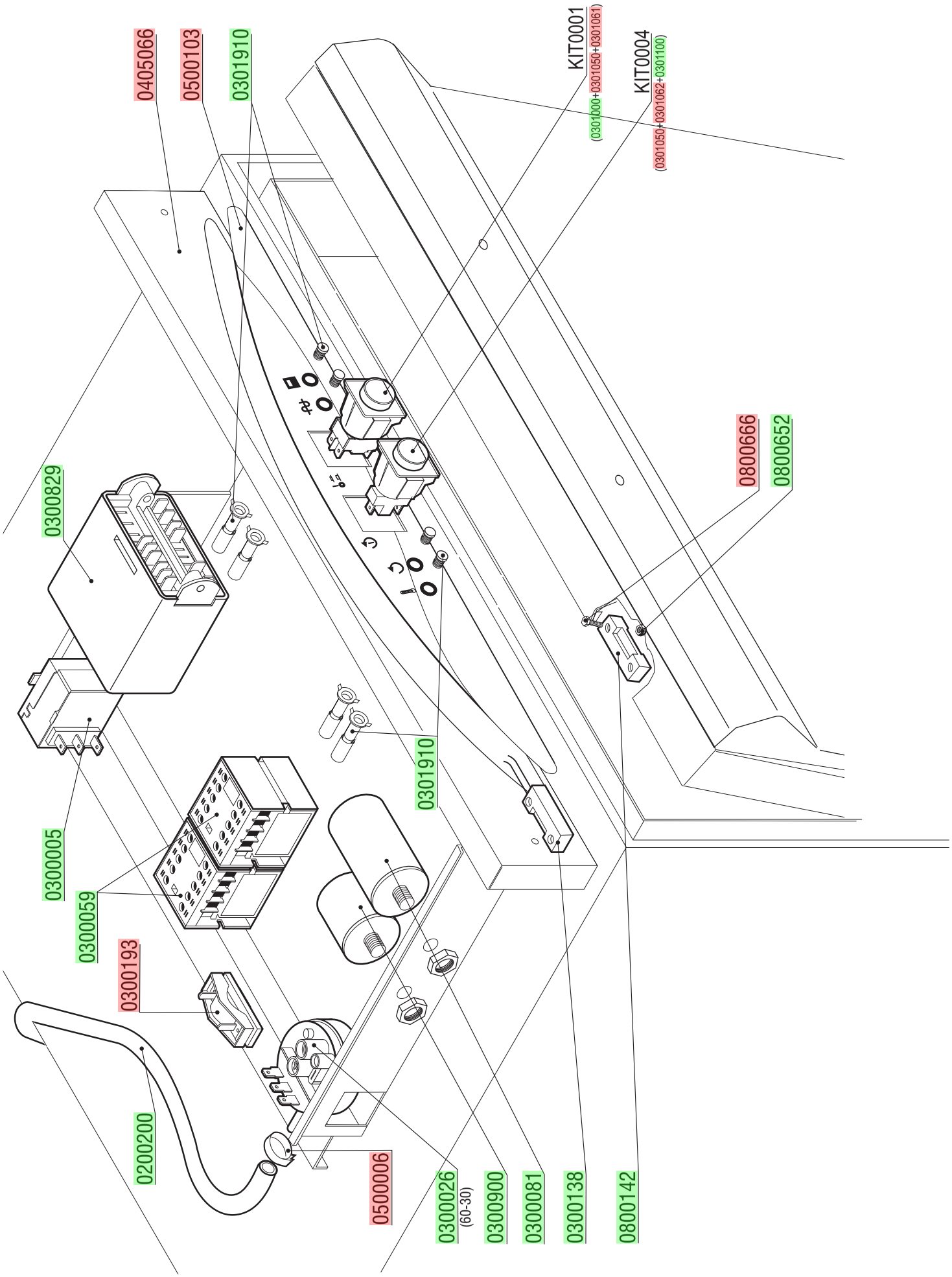

lamber	DRAIN PUMPE PARTS	MOD. GS800	TAV. 5 C ED. 01/2016

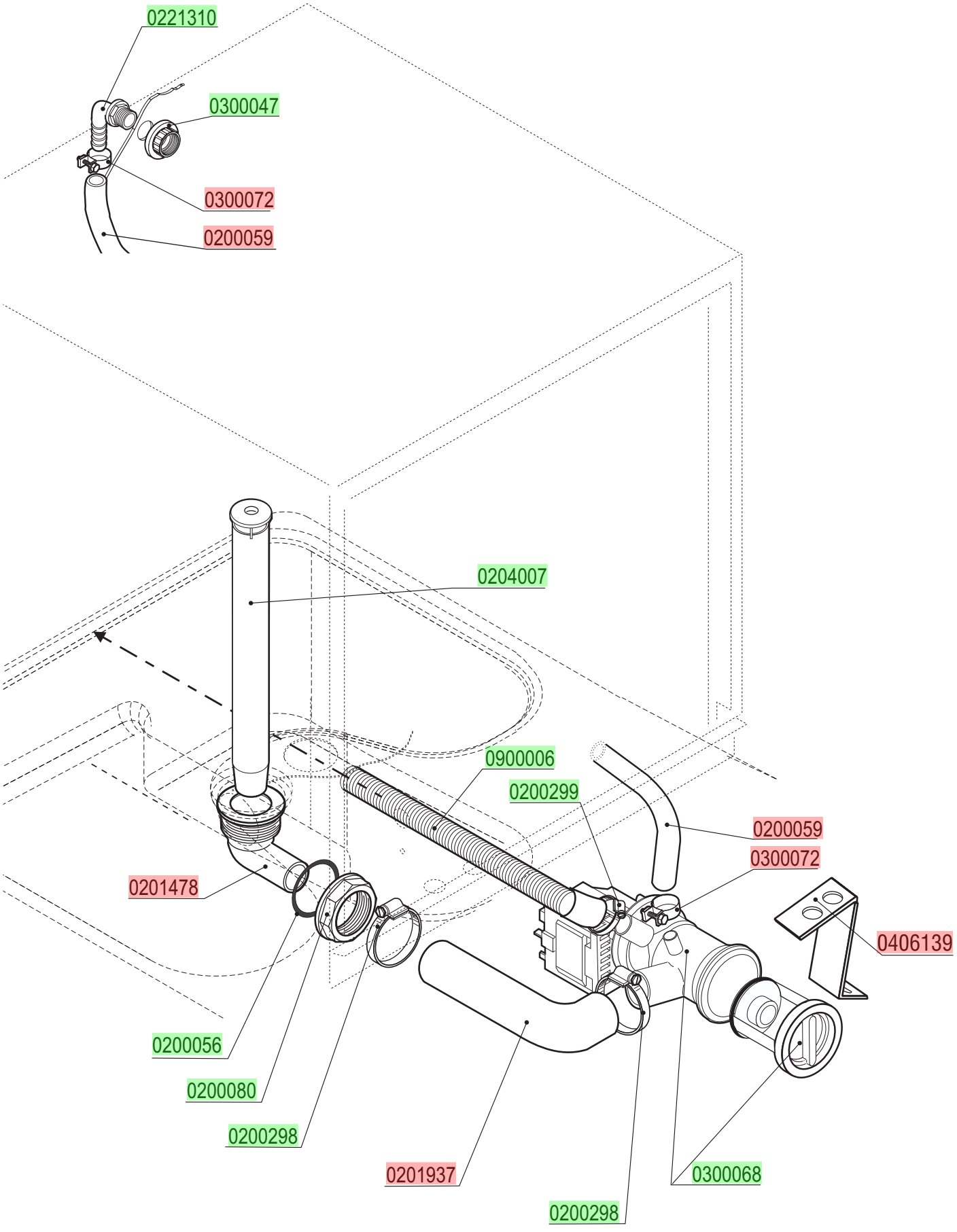

lamber	DOOR	MOD. GS800	TAV. 6 C ED. 01/2016

TAV. 6 DI 9

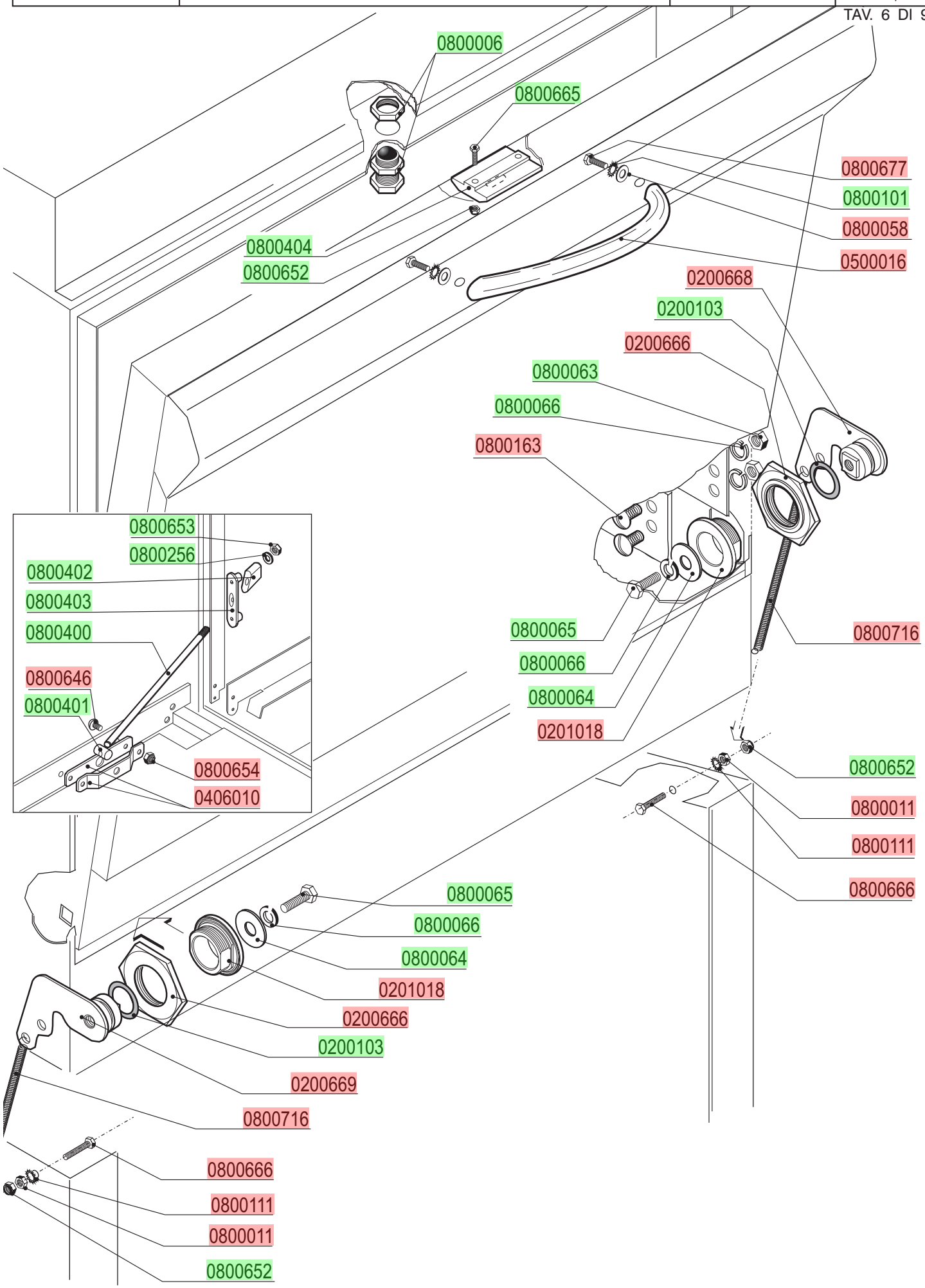

lamber	HOOD	MOD. GS800	TAV. 7 C ED. 01/2016

TAV. 7 DI 9

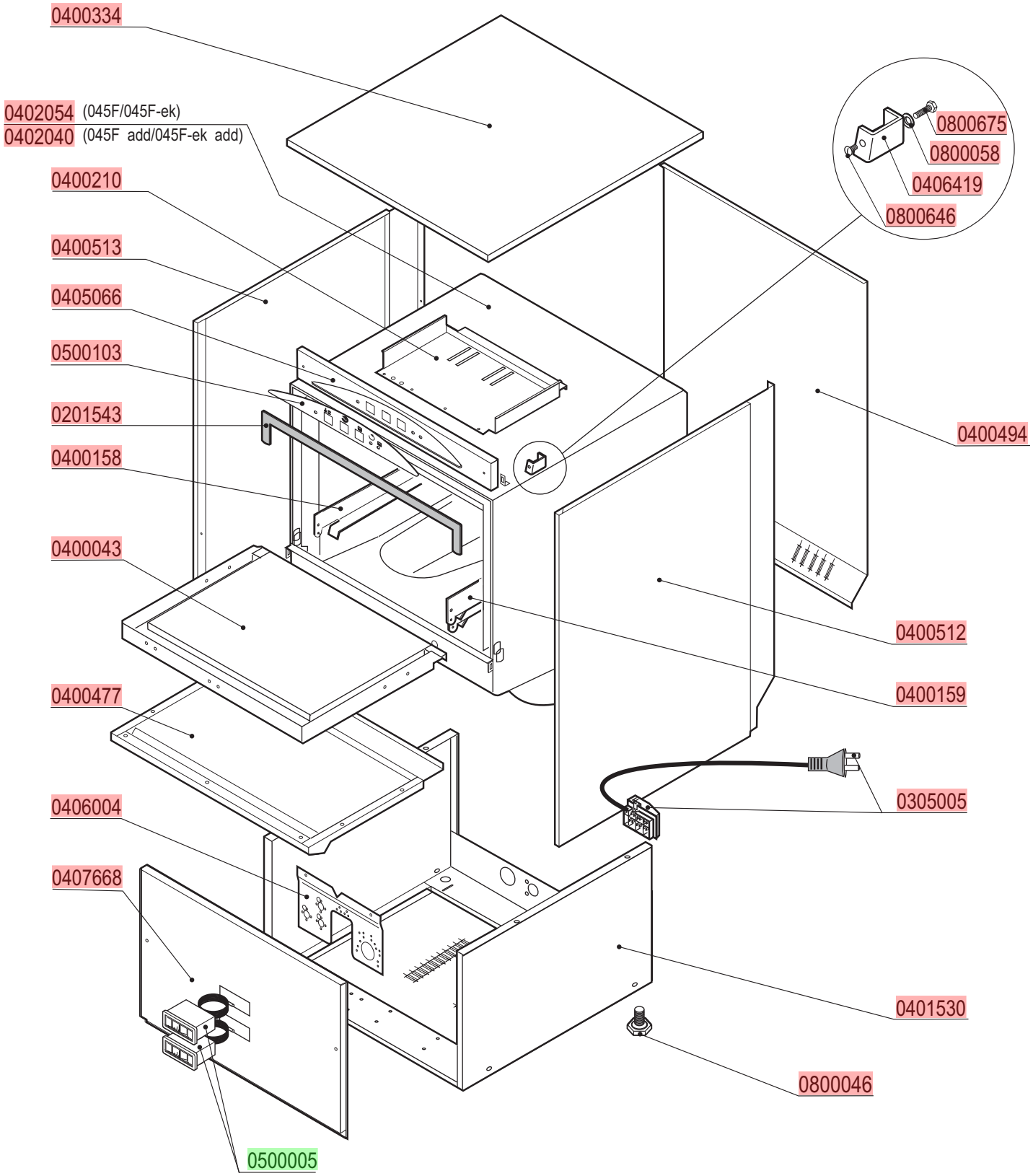

lamber	DISPENSERS	MOD. GS800	TAV. 8 C ED. 01/2016

TAV. 8 DI 9

DETERGENT PUMP

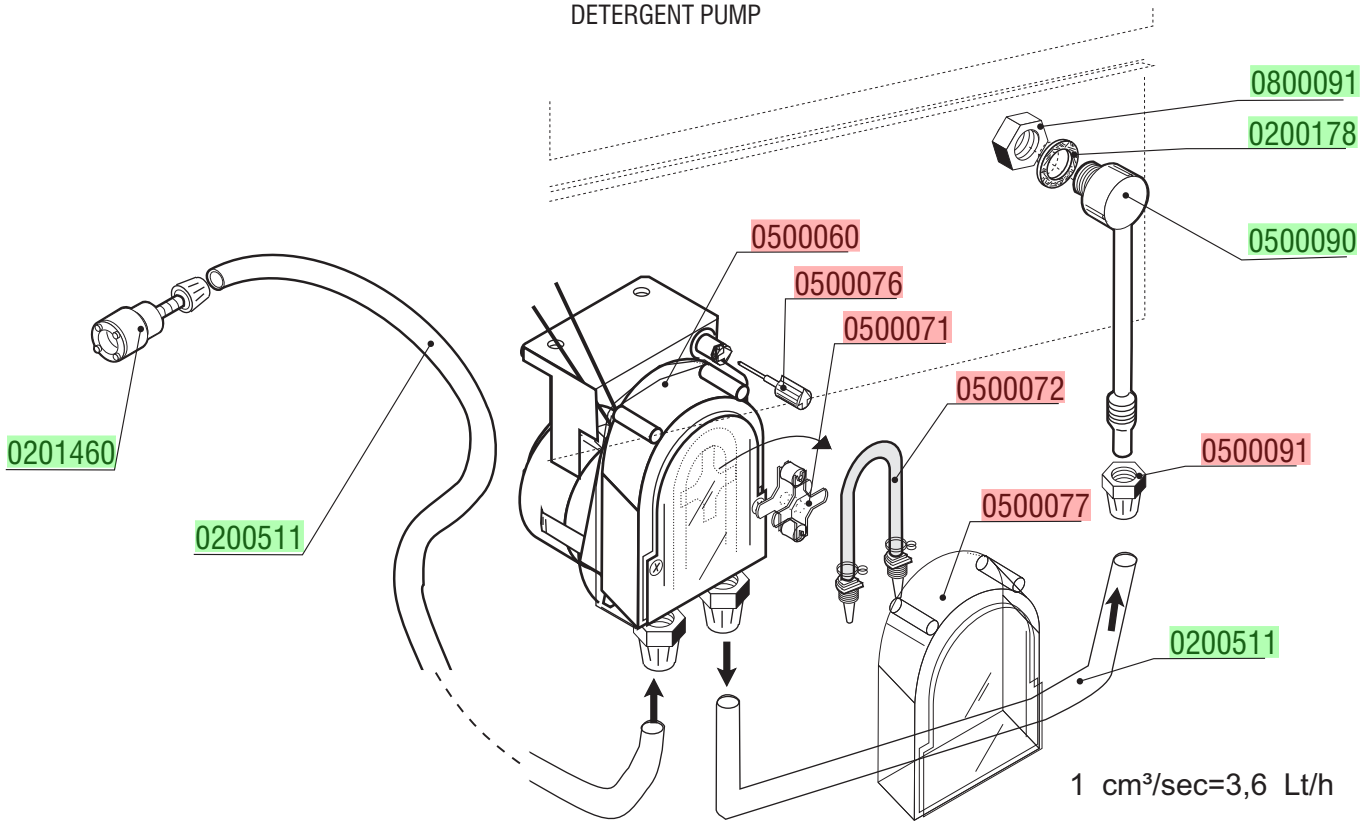

RINSE AID DISPENSER

cod. 0599999

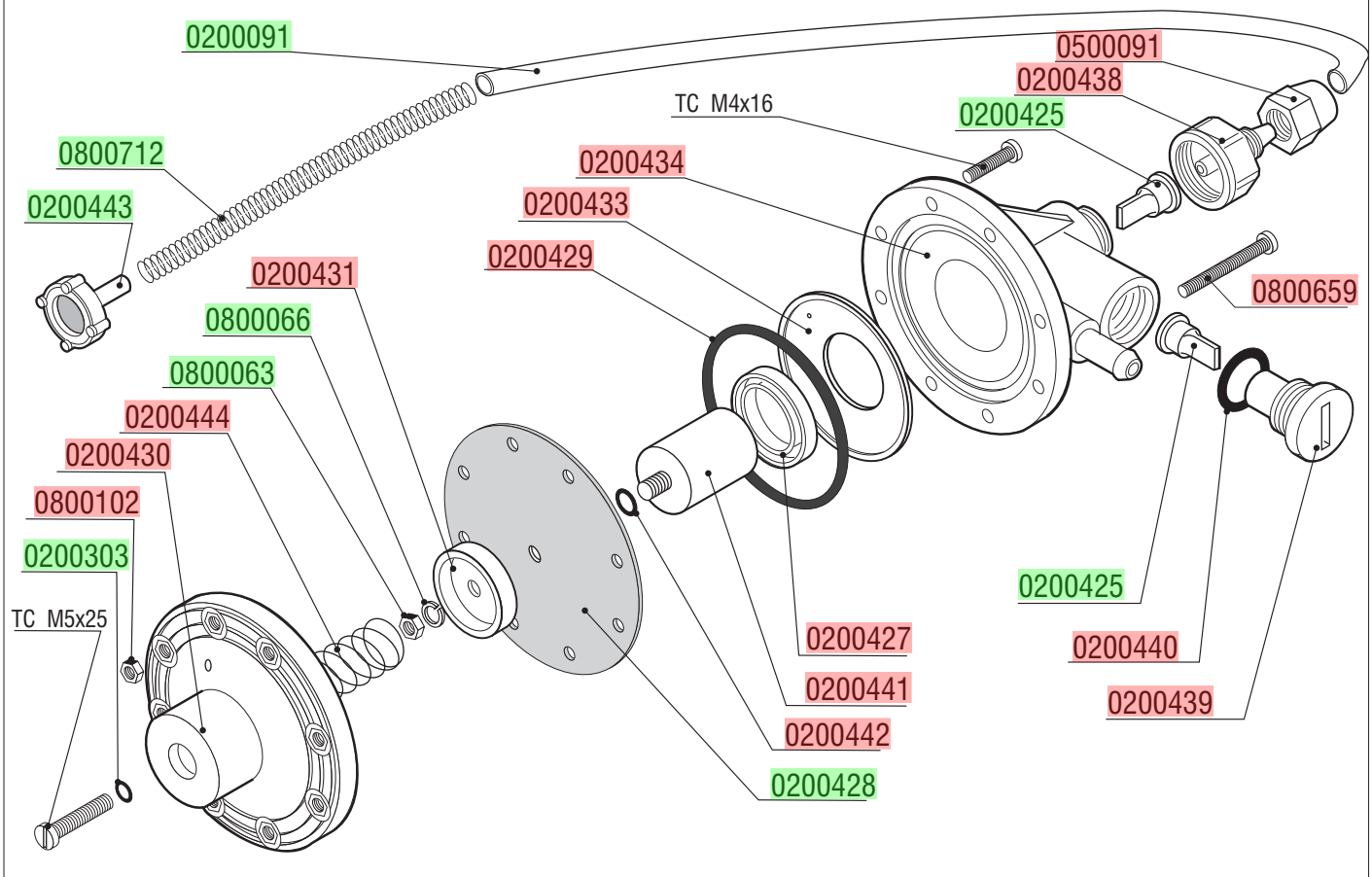

lamber	WASHING PUMP	MOD. GS800	TAV. 9 C ED. 01/2016

TAV.9 DI 9

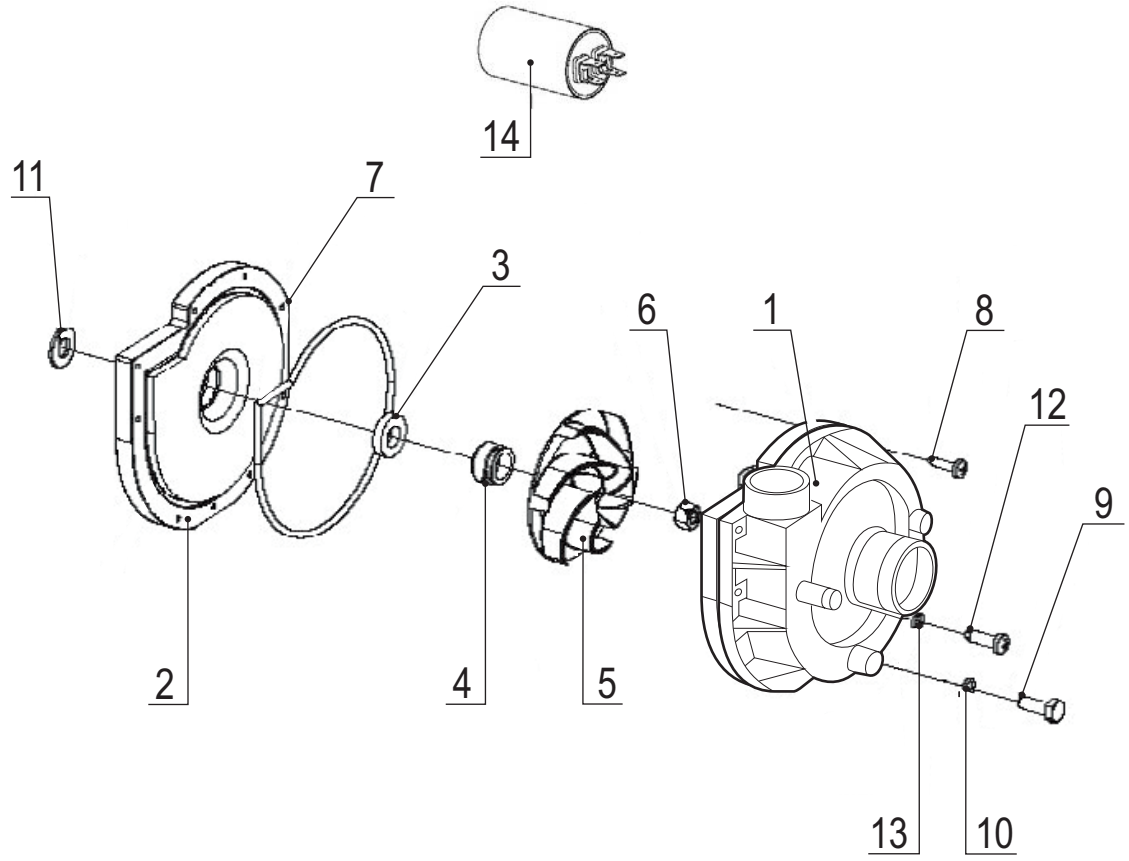

	CODE	Power		Pump delivery	Voltage
		Hp	W	Lt/min	Volt
2421	0301206	0,4	290	-	230 V/3~50Hz

		ENGLISH
Pos.	Codice	Description
1		Pump body
2		Support
3		Fixed seal
4		Sealing gasket
5		Impeller 50Hz
6		Nut
7		Gasket
8		Screw
9		Plug-screw
10		Plug's OR-ring
11		Drop-breaker
12		Rubberpipe fitting screw
13		Rubberpipe titting OR-ring
14		Capacitor

Cod.0301206

