DESPIECE TECNICO / SPARE PARTS BOM

Hornos a gas
Fours à gaz
Gas ovens
Gas heissluftdämpfer
Forni a gas
Fornos a gás

Modelos / Models:

AG-061
ACG-061
APG-061
AG-101
ACG-101
APG-101

Septiembre 2012 September
Revisado Julio 2015 July Revised

FAGOR

FAGOR INDUSTRIAL

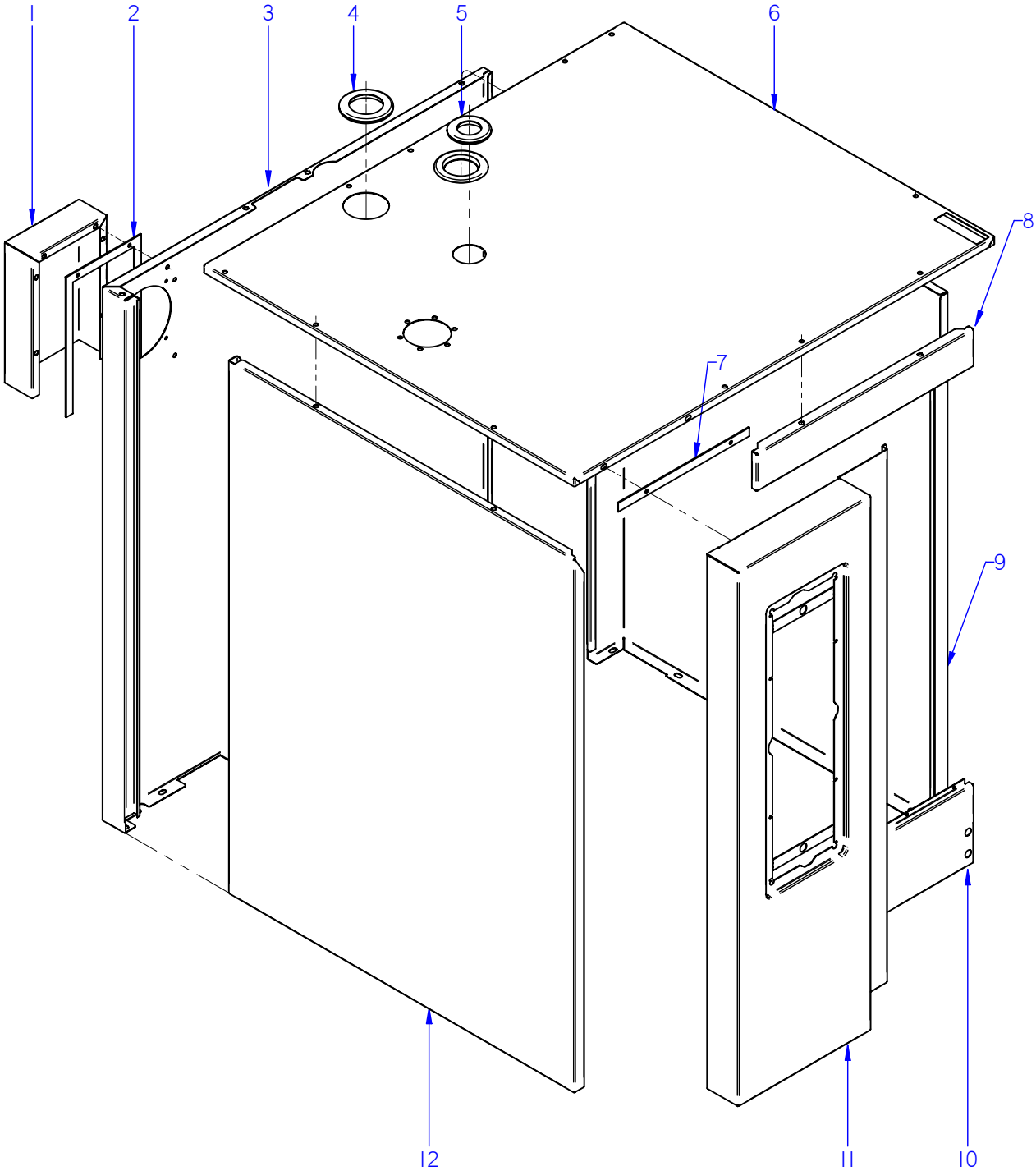

ITEM MARCADO EN COLOR = REPUESTO RECOMENDADO
COLOURED ITEM = RECOMMENDED SPARE PART

Nº plano / N º plane	Firma	Fecha / Date	Denominación / Denomination: MUEBLE / UNIT	Lamina / Sheet	
C-3046		2012-09	HORNOS AG; ACG; APG-061/101	1	Fagor Industrial S.Coop. Oñate FAGOR

MOD.	HORNOS / OVEN	ZONA / ZONE	MUEBLE / UNIT	PLANO DIAGRAM	C-3046

ITEM	CODIGO REFERENCE	DENOMINACION	DENOMINATION	ACG-061	AG-061	APG-061	ACG-101	AG-101	APG-101			ELIMINADO ELIMINATED	INTRODUCID. INTRODUCED	NOTAS
1	12022537	CHAPA SEPARACION IPX5	SEPARATION PLATE IPX5	1	1	1	1	1	1					
2	12024082	JUNTA IPX5	SEAL IPX5	1	1	1	1	1	1					
	12009944	ARANDELA A5	FLAT WASHER A.5	6	6	6	6	6	6					
	12010267	ARANDELA 16X6X1.2 A.304	FLAT WASHER 16X6X1.2 A.304	7	7	7	7	7	7					
	12009882	ARANDELA ABANICO A6 A.304	FAN SHAPED WASHER A.6	7	7	7	7	7	7					
	12010249	TORNILLO EXAGONAL M4X10	HEXAGONAL BOLT M4X10	7	7	7	7	7	7					
	12010186	TORNILLO EXAGONAL M6X15 A304	HEXAGONAL SCREW M6X15	6	6	6	6	6	6					
3	12039596	PANEL POSTER EXTER 061	REAR EXTERIOR PANEL061	1	1	1	_	_	_					
3	12039494	PANEL POSTER EXTER 101	REAR EXTERIOR PANEL101	_	_	_	1	1	1					
4	12024231	PASAMUROS CHIMENEA 101003361	FEED THROUGH FLUE PIPE 10100	2	2	2	2	2	2					
5	12039535	PASAMUROS Ø 38	FEED THROUGH Ø 38	1	1	1	1	1	1					
6	12044094	PANEL SUPERIOR ACG 061	SUP. EXTERIOR PANEL ACG 061	1	_	_	_	_	_					
6	12043261	PANEL SUPERIOR APG 061	SUP. EXTERIOR PANEL APG 061		1	1	_	_	_					
6	12044222	PANEL SUPE. EXTERIOR ACG 101	SUP. EXTERIOR PANEL ACG 101	_	_	_	1	_	_					
6	12043256	PANEL SUPE. EXTERIOR AG 101	SUP. EXTERIOR PANEL AG 101	_	_	_	_	1	1					
7	12039495	JUNTA PORTAMANDOS 101-102	CONTROL PANEL SEAL 101-102	1	1	1	1	1	1					
8	12039595	PANEL ANTERIOR SUP. ADV 1/1	UPPER FRONT PANEL ADV 102	1	1	1	1	1	1					
9	12043484	PANEL DERECHO ADV ELEC 061	RIGHT PANEL ADV ELEC 061	1	_	_	_	_	_					
9	12039673	PANEL DERECHO 061	RIGHT PANEL 061	_	1	1	_	_	_					
9	12043609	PANEL DERECHO ADV ELEC 101	RIGHT PANEL ADV ELEC 101	_	_	_	1	_	_					
9	12039531	PANEL DERECHO 101 G	RIGHT PANEL 101 G	_	_	_	_	1	1					
10	12043678	PANEL FRONTAL INFER. ACE	LOWER FRONT PANEL ACE	1	_	_	1	_	_					
10	12039624	PANEL FRONTAL INFER. VPE	LOWER FRONT PANELVPE	_	1	1	_	1	1					
11	12043680	PORTAMANDOS ACE 061	CONTROL PANEL ACE 061	1	_	_	_	_	_			16.09.13		
11	12043666	PORTAMANDOS AE 061	CONTROL PANEL AE 061	_	1	_	_	_	_			16.09.13		
11	12039625	PORTAMANDOS APE 061	CONTROL PANEL APE 061	1	1	_	_	_	_				16.09.13	
11	12039625	PORTAMANDOS APE 061	CONTROL PANEL APE 061	_	_	1	_	_	_					
11	12043806	PORTAMANDOS ACE101	CONTROL PANEL ACE101	_	_	_	1	_	_			16.09.13		
11	12039533	PORTAMANDOS AG 101	CONTROL PANEL AG 101	_	_	_	_	1	_			16.09.13		
11	12043767	PORTAMANDOS APE-APG 101	CONTROL PANEL APE-APG 101	_	_	_	1	1	_				16.09.13	
11	12043767	PORTAMANDOS APE-APG 101	CONTROL PANEL APE-APG 101	_	_	_	_	_	1					

MOD.	HORNOS / OVEN	ZONA / ZONE	MUEBLE / UNIT	PLANO DIAGRAM	C-3046

ITEM	CODIGO REFERENCE	DENOMINACION	DENOMINATION	ACG-061	AG-061	APG-061	ACG-101	AG-101	APG-101			ELIMINADO ELIMINATED	INTRODUCID. INTRODUCED	NOTAS
12	12043530	PANEL EXTER. IZDO. ADV ELEC.06	REAR LEFT PANEL ADV ELE.061	1	_	_	_	_	_					
12	12039674	PANEL EXTER. IZDO. 061	REAR LEFT PANEL 061	_	1	1	_	_	_					
12	12043702	PANEL EXT. IZDO. ADV ELEC. 101	REAR LEFT PANEL ADV ELEC.101	_	_	_	1	_	_					
12	12039532	PANEL EXTER. IZDO. 101 G	REAR LEFT PANEL 101 G	_	_	_	_	1	1					
	12010163	REMACHE EXAGONAL M.5	HEXAGONAL RIVET M.5	2	2	2	2	2	2					
	12010267	ARANDELA 16X6X1.2 A.304	FLAT WASHER 16X6X1.2 A.304	2	2	2	2	2	2					
	12009882	ARANDELA ABANICO A6 A.304	FAN SHAPED WASHER A.6	2	2	2	2	2	2					
	12010186	TORNILLO EXAGONAL M6X15 A304	HEXAGONAL SCREW M6X15	2	2	2	2	2	2					
	12010242	TORNIL. APLASTADO M5X13 A 304	FLAT SCREW M.5x13	2	2	2	2	2	2					

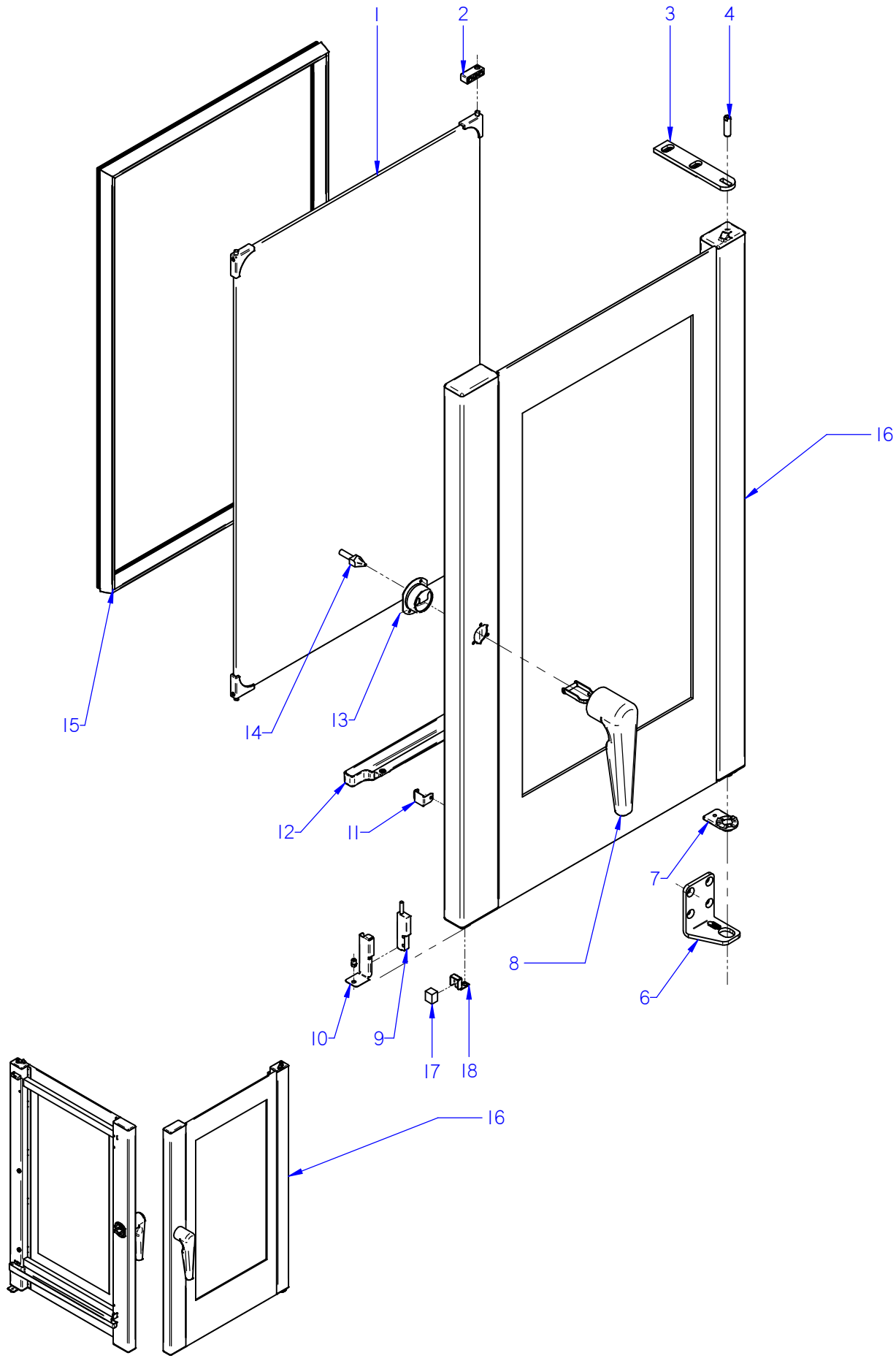

ITEM MARCADO EN COLOR = REPUESTO RECOMENDADO
COLOURED ITEM = RECOMMENDED SPARE PART

Nº plano / N º plane	Firma / Signature	Fecha / Date	Denominación / Denomination: PUERTA / DOOR	Lamina / Sheet	
C-3047	Iban R.	03-2015	HORNOS AG; ACG; APG-061/101	2	Fagor Industrial S.Coop. FAGOR Oñate

MOD.	HORNOS / OVEN	ZONA / ZONE	PUERTA / DOOR	PLANO DIAGRAM	C-3047

ITEM	CODIGO REFERENCE	DENOMINACION	DENOMINATION	ACG-061	AG-061	APG-061	ACG-101	AG-101	APG-101			ELIMINADO ELIMINATED	INTRODUCID. INTRODUCED	NOTAS
1	**12046041**	**KIT CRISTAL INTER. 061**	**061 INNER GLASS KIT**	**1**	**1**	**1**	_	_	_					
1	**12046042**	**KIT CRISTAL INTER. 101**	**101 INNER GLASS KIT**	_	_	_	**1**	**1**	**1**					
2	12041724	BISAGRA CRISTAL INTERIOR	INNER GLASS HINGE	2	2	2	2	2	2					
	12010209	TORNILLO AVELLANADO M5X15	COUNTERSUNK SCREW M.5x15	2	2	2	2	2	2					
3	12039312	BISAGRA SUPERIOR	UPPER HINGE	1	1	1	1	1	1					
	12009882	ARANDELA ABANICO A6 A.304	FAN SHAPED WASHER A.6	3	3	3	3	3	3					
	12010106	TORNILLO ALLEN INOX. M6X35MM	ALLEN BOLT STAINLE.M6X35MM	3	3	3	3	3	3					
4	12023636	EJE SUPERIOR	UPPER SHAFT	1	1	1	1	1	1					
	12023631	ARANDELA AMARRE	DOOR ANCHORING WASHER	1	1	1	1	1	1					
	12023716	RESORTE 06329	SPRING 06329	1	1	1	1	1	1					
	12009882	ARANDELA ABANICO A6 A.304	FAN SHAPED WASHER A.6	1	1	1	1	1	1					
	12010186	TORNILLO EXAGONAL M6X15 A304	HEXAGONAL SCREW M6X15	1	1	1	1	1	1					
6	12043391	BISAGRA INFERIOR ADVANCE	BOTTOM HINGE ADVANCE	1	1	1	1	1	1					
7	12039311	BASE BISAGRA INFERIOR PUERTA	LOWER DOOR HINGE BASE	1	1	1	1	1	1			02.09.13		
7	12047967	BASE BISAGRA INFERIOR 6 DIEN	LOWER HINGE BASE	1	1	1	1	1	1				02.09.13	
	12009890	ARANDELA ABANICO A5 A.304	FAN SHAPED WASHER A.5	1	1	1	1	1	1					
	12009944	ARANDELA A5	FLAT WASHER A.5	1	1	1	1	1	1					
	12010238	TORNILLO EXAGONAL M5x10	HEXAGONAL BOLT M5x10	1	1	1	1	1	1					
	12010199	TORNILLO AVELLANADO M6x16	COUNTERSUNK SCREW M6x16	4	4	4	4	4	4					
8	12047580	REP. MANILLA 1/1 ADVANCE	HANDLE 1/1 ADVANCE	1	1	1	1	1	1					
	12010262	TORNILLO AVELLANADO M4X15	COUNTERSUNK SCREW M.4x15	3	3	3	3	3	3					
9	12024560	INTERRUPTOR MAGNETICO AC	MAGNETIC SWITCH AC	1	1	1	1	1	1					
10	12022166	SOPORTE MICRO PUERTA	DOOR MICRO SWITCH	1	1	1	1	1	1					
	12010242	TORNIL. APLASTADO M5X13 A 304	FLAT SCREW M.5x13	1	1	1	1	1	1					
11	12041725	MUELLE CIERRE CRISTAL INTERIO	INNER GLASS SPRING LOCK	1	1	1	1	1	1					
12	12039485	RECOGEAGUAS PUERTA 101	DOOR SPRING WATER COLLECT	1	1	1	1	1	1					
	12009944	ARANDELA A5	FLAT WASHER A.5	3	3	3	3	3	3					
	12009890	ARANDELA ABANICO A5 A.304	FAN SHAPED WASHER A.5	3	3	3	3	3	3					
	12010242	TORNIL. APLASTADO M5X13 A 304	FLAT SCREW M.5x13	3	3	3	3	3	3					

MOD.	HORNOS / OVEN	ZONA / ZONE	PUERTA / DOOR	PLANO DIAGRAM	C-3047

ITEM	CODIGO REFERENCE	DENOMINACION	DENOMINATION	ACG-061	AG-061	APG-061	ACG-101	AG-101	APG-101			ELIMINADO ELIMINATED	INTRODUCID. INTRODUCED	NOTAS
13	12023553	EMBELLECEDOR POSTERI. ASA	REAR TRIM HANDLE	1	1	1	1	1	1			03.03.14		
13	12091814	EMBELLECEDOR PUERTA ADV-UL	DOOR TRIM ADV-UL	1	1	1	1	1	1				03.03.14	
	12010262	TORNILLO AVELLANADO M4X15	COUNTERSUNK SCREW M.4x15	2	2	2	2	2	2					
14	12023849	ANCLAJE PUERTA	DOOR ANCHORING	1	1	1	1	1	1					
15	12039599	JUNTA PUERTA COMPL. 061	DOOR JOINT 061	1	1	1	_	_	_					
15	12039475	JUNTA PUERTA COMPL. 101	DOOR JOINT 101	_	_	_	1	1	1					
	12009970	REMACHE EXAGONAL M.5 INOX	HEXAGONAL RIVET M.5 INOX	2	2	2	2	2	2					
16	**12046015**	**KIT PUERTA 061**	**DOOR 061 KIT**	**1**	**1**	**1**	_	_	_					
16	**12046018**	**KIT PUERTA 101**	**DOOR 101 KIT**	_	_	_	**1**	**1**	**1**					
17	12024303	IMAN	MAGNET	1	1	1	1	1	1					
18	12049358	SOPORTE IMAN	MAGNET SUPPORT	1	1	1	1	1	1					

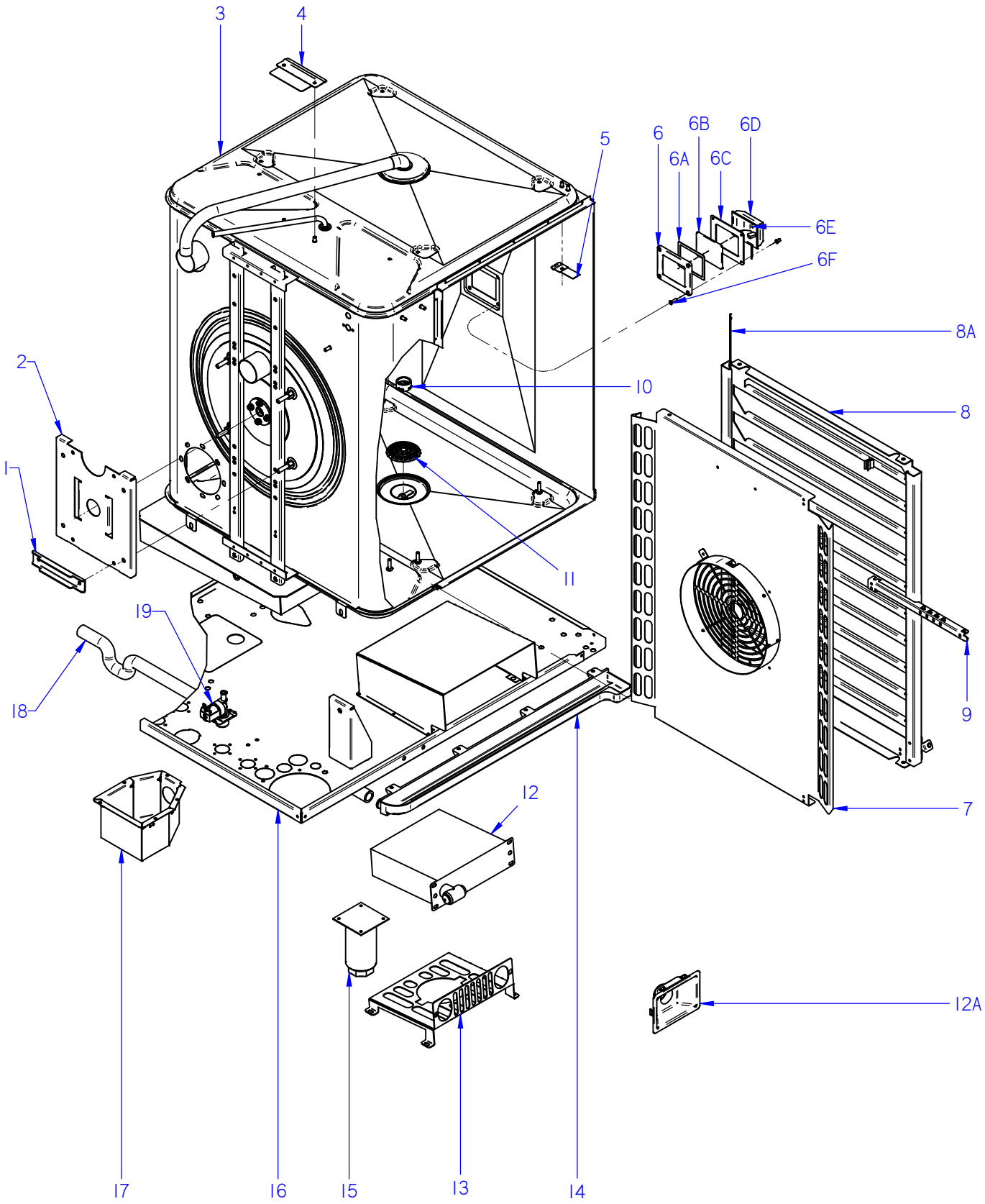

ITEM MARCADO EN COLOR = REPUESTO RECOMENDADO
COLOURED ITEM = RECOMMENDED SPARE PART

Nº plano / N º plane	Firma / Signature	Fecha / Date	Denominación / Denomination: MUEBLE INTERIOR / INTERIOR OVEN	Lamina / Sheet	
C-3048	Iban R.	03-2015	HORNOS AG; ACG; APG-061/101	3	Fagor Industrial S.Coop. FAGOR Oñate

MOD.	HORNOS / OVEN	ZONA / ZONE	MUEBLE INTERIOR / INTERIOR OVEN	PLANO DIAGRAM	C-3048

ITEM	CODIGO REFERENCE	DENOMINACION	DENOMINATION	ACG-061	AG-061	APG-061	ACG-101	AG-101	APG-101			ELIMINADO ELIMINATED	INTRODUCID. INTRODUCED	NOTAS
1	12039460	REFUERZO MOTOR	MOTOR REINFORCEMENT	1	1	1	1	1	1					
	12009944	ARANDELA A5	FLAT WASHER A.5	4	4	4	4	4	4					
	12009890	ARANDELA ABANICO A5 A.304	FAN SHAPED WASHER A.5	4	4	4	4	4	4					
	12010221	TORNILLO EXAGONAL M5X15	HEXAGONAL BOLT M5X15	4	4	4	4	4	4					
2	12039615	SOPORTE MOTOR	SOPORTE MOTOR	1	1	1	1	1	1					
3	12046346	CUERPO INT. COMPL. ACG 061	INTERIOR FULL BODY ACG 061	1	_	_	_	_	_			01.10.12		
3	12044066	CUERPO INT. COMPL. ACG 061	INTERIOR FULL BODY ACG 061	1	_	_	_	_	_				01.10.12	
3	12046301	CUERPO INT. COMPL. AG 061	INTERIOR FULL BODY AG 061	_	1	_	_	_	_			01.10.12		
3	12044034	CUERPO INT. COMPL. AG 061	INTERIOR FULL BODY AG 061	_	1	_	_	_	_				01.10.12	
3	12046277	CUERPO INT. COMPL. APG 061	INTERIOR FULL BODY APG 061	_	_	1	_	_	_			01.10.12		
3	12039659	CUERPO INT. COMPL. APG 061	INTERIOR FULL BODY APG 061	_	_	1	_	_	_				01.10.12	
3	12046377	CUERPO INT. COMPL. ACG 101	INTERIOR FULL BODY ACG 101	_	_	_	1	_	_			01.10.12		
3	12044169	CUERPO INT. COMPL. ACG 101	INTERIOR FULL BODY ACG 101	_	_	_	1	_	_				01.10.12	
3	12046366	CUERPO INT. COMPL. AG 101	INTERIOR FULL BODY AG 101	_	_	_	_	1	_			01.10.12		
3	12039513	CUERPO INT. COMPL. AG 101	INTERIOR FULL BODY AG 101	_	_	_	_	1	_				01.10.12	
3	12046394	CUERPO INT. COMPL. APG 101	INTERIOR FULL BODY APG 101	_	_	_	_	_	1			01.10.12		
3	12044069	CUERPO INT. COMPL. APG 101	INTERIOR FULL BODY APG 101	_	_	_	_	_	1				01.10.12	
4	12039529	SOPORTE LIMITADOR CAMARA	LIMITER BRACKET CAMERA	1	1	1	1	1	1					
	12009868	ARANDELA PLANA INOX 6MM	WASHER FLAT 6 MM INOX.	2	2	2	2	2	2					
	12009882	ARANDELA ABANICO A6 A.304	FAN SHAPED WASHER A.6	2	2	2	2	2	2					
	12010255	TORNILLO EXAGONAL M6 INOX.	HEXAGONAL SCREW M6 INOX.	2	2	2	2	2	2					

MOD.	HORNOS / OVEN	ZONA / ZONE	MUEBLE INTERIOR / INTERIOR OVEN	PLANO DIAGRAM	C-3048

ITEM	CODIGO REFERENCE	DENOMINACION	DENOMINATION	ACG-061	AG-061	APG-061	ACG-101	AG-101	APG-101			ELIMINADO ELIMINATED	INTRODUCID. INTRODUCED	NOTAS
5	12041767	SOPORTE SONDA PINCHO CAMARA	CAMERA PROBE SUPP. PINCHO	2	2	2	2	2	2					
6	12024464	MARCO LAMPARA	LAMP ANCHORING PLATEN	1	1	1	1	1	1					
6A	12023532	JUNTA INTERIOR LAMPARA	LAMP INNER JOINT	1	1	1	1	1	1					
6B	12023668	CRISTAL LAMPARA	LAMP GLASS	1	1	1	1	1	1					
6C	12023578	JUNTA EXTERIOR LAMPARA	LAMP OUTER JOINT	1	1	1	1	1	1					
6D	12024545	PORTALAMPARAS	LAMP HOLDER	1	1	1	1	1	1					
6E	12025123	LAMPARA 10W-12V	LIGHT 10W 12V	1	1	1	1	1	1					
6F	12010262	TORNILLO M4X15MM DIN965	M4X15MM DIN965 SCREW	4	4	4	4	4	4					
7	**12126842**	**CUBREVENTILADOR 061 GAS**	**FAN COVER 061 GAS**	**1**	**1**	**1**	_	_	_					
7	**12126832**	**CUBREVENTILADOR 101 GAS**	**FAN COVER 101 GAS**	_	_	_	**1**	**1**	**1**					
8	**12119263**	**KIT PORTABANDEJAS DCHA. 061**	**RIGHT HOLDER TRAYS ADV 061**	**1**	**1**	**1**	_	_	_					
8	**12119260**	**KIT PORTABANDEJAS IZDA 061**	**LEFT HOLDER TRAYS ADV 061**	**1**	**1**	**1**	_	_	_					
8A	12039594	TOPE BANDEJAS 061	TRAY TOP 061	2	2	2	_	_	_					
8	**12118378**	**KIT PORTABANDEJAS DCHA. 101**	**RIGHT HOLDER TRAYS ADV 101**	_	_	_	**1**	**1**	**1**					
8	**12118377**	**KIT PORTABANDEJAS IZDA 101**	**LEFT HOLDER TRAYS ADV 101**	_	_	_	**1**	**1**	**1**					
8A	12039490	TOPE BANDEJAS 101-102	TRAY TOP101-102	_	_	_	2	2	2					
9	**12126827**	**SOPORTE CORE HOLDER**	**CORE HOLDER SUPPORT**	**1**	**1**	**1**	**1**	**1**	**1**					
10	12023935	PUNTA DIFUSORA LAVADO	WASHING DISPENSER POINT	_	_	1	_	_	1					

MOD.	HORNOS / OVEN	ZONA / ZONE	MUEBLE INTERIOR / INTERIOR OVEN	PLANO DIAGRAM	C-3048

ITEM	CODIGO REFERENCE	DENOMINACION	DENOMINATION	ACG-061	AG-061	APG-061	ACG-101	AG-101	APG-101			ELIMINADO ELIMINATED	INTRODUCID. INTRODUCED	NOTAS
11	12002681	FILTRO DESAGÜE	DRAINAGE FILTER	1	1	1	1	1	1			15.09.13		
11	12095042	FILTRO DESAGÜE Ø53	DRAINAGE FILTER Ø53	1	1	1	1	1	1				15.09.13	
12	12040977	DUCHA	SHOWER	_	1	1	_	1	1					
12A	12041736	EMBELLECEDOR DUCHA ADV.	SHOWER TRIM ADVANCE	_	1	1	_	1	1					
13	12039620	CHAPA AMARRE DUCHA	TIE PLATE SHOWER	_	1	1	_	1	1					
	12009868	ARANDELA PLANA INOX 6MM	WASHER FLAT 6 MM INOX.	_	2	2	_	2	2					
	12009882	ARANDELA ABANICO A6 A.304	FAN SHAPED WASHER A.6	_	2	2	_	2	2					
	12010180	TORNILLO EXAGONAL M6X20 INOX.	HEXAGONAL SCREW M6X20 INOX.	_	2	2	2	2	2					
14	12039627	RECOGEAGUAS HORNO	SPRING WATER COLLE.	1	1	1	1	1	1					
	12010267	ARANDELA 16X6X1.2 A.304	FLAT WASHER 16X6X1.2 A.304	6	6	6	6	6	6					
	12009882	ARANDELA ABANICO A6 A.304	FAN SHAPED WASHER A.6	6	6	6	6	6	6					
	12010186	TORNILLO EXAGONAL M6X16 INOX.	HEXAGONAL SCREW M6X16 INOX.	6	6	6	6	6	6					
15	12009104	PATA REGULABLE	REGULABLE LEG	4	4	4	4	4	4					
	12009868	ARANDELA PLANA INOX 6MM	WASHER FLAT 6 MM INOX.	16	16	16	16	16	16					
	12009882	ARANDELA ABANICO A6 A.304	FAN SHAPED WASHER A.6	16	16	16	16	16	16					
	12010180	TORNILLO EXAGONAL M6X20 INOX.	HEXAGONAL SCREW M6X20 INOX.	16	16	16	16	16	16					
16	12043397	BASE EXTERI. ADV ELEC. 061-101	EXTER. BASE ADV ELEC. 061-101	1	_	_	1	_	_					
16	12039672	BASE EXTERIO. 1/1 GAS	EXTERI. BASE 1/1 GAS	_	1	1	_	1	1					
17	12043836	CAJA IPX5 APE ADVANCE	IPX5 APE ADVANCE COVER	_	_	1	_	_	1					
18	12039498	TUBO RECOGEAGUAS 101	COLLECT WATER PIPE 101	1	1	1	1	1	1					
	12009628	ABRAZADERA ELAST. 26.7-28.1	SPRING CLAMP 26.7-28.1	2	2	2	2	2	2					
19	12025161	ELECTROVALV. 230VAC 50/60Hz 1V	SOLENOID VALVE 230VAC 1 V	_	1	1	_	1	1					

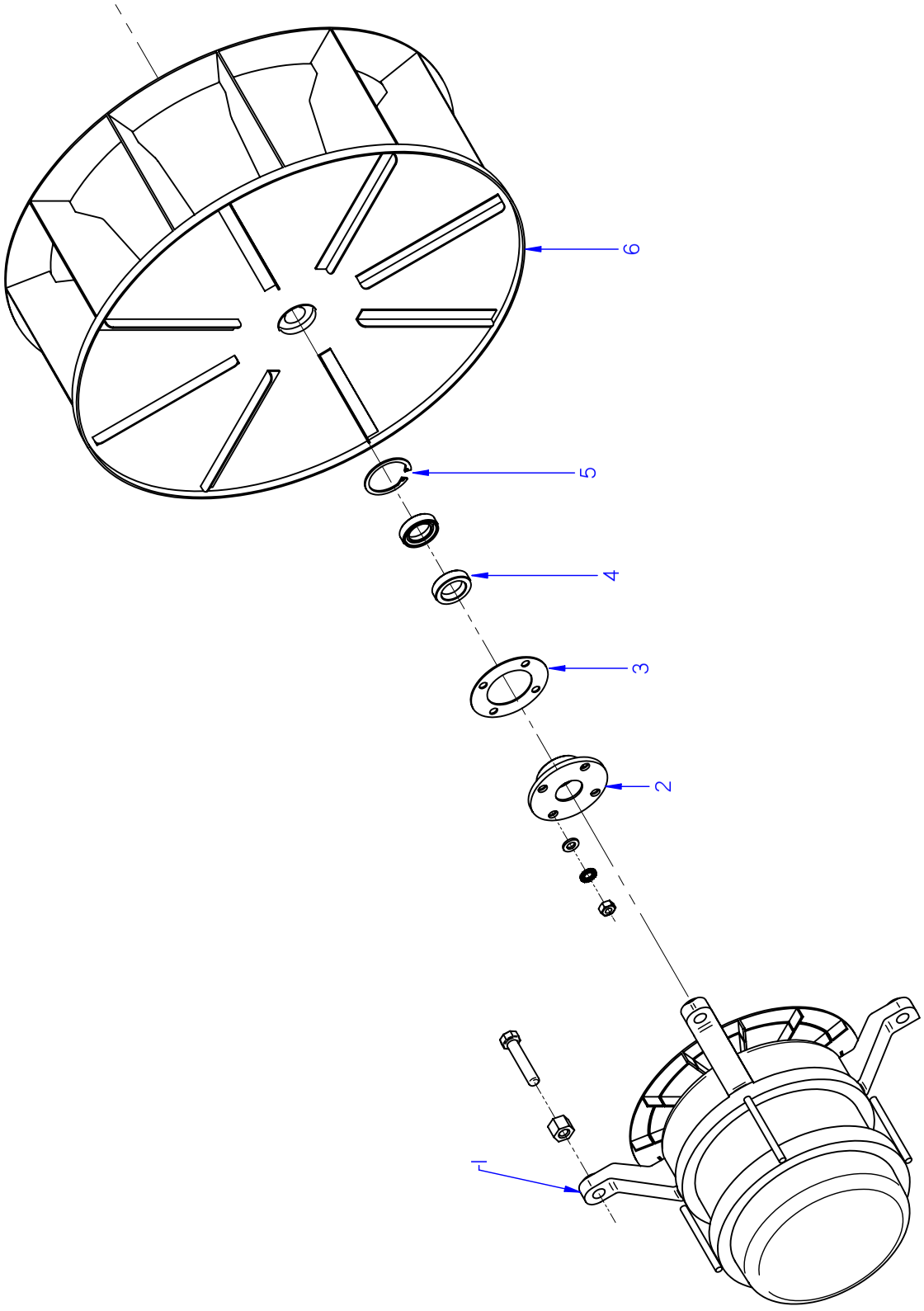

ITEM MARCADO EN COLOR = REPUESTO RECOMENDADO
COLOURED ITEM = RECOMMENDED SPARE PART

Nº plano / N.º plane	Firma	Fecha / Date	Denominación / Denomination: TURBINA / TURBINE	Lamina / Sheet	
C-3049		2012-09	HORNOS AG; ACG; APG-061/101	4	Fagor Industrial S.Coop. FAGOR Oñate

MOD.	HORNOS / OVEN	ZONA / ZONE	TURBINA / TURBINE	PLANO DIAGRAM	C-3049

ITEM	CODIGO REFERENCE	DENOMINACION	DENOMINATION	ACG-061	AG-061	APG-061	ACG-101	AG-101	APG-101			ELIMINADO ELIMINATED	INTRODUCID. INTRODUCED	NOTAS
1	12024325	MOTOR 230VAC3N650KW1450RPM	MOTOR 230V AC 3N650KW 1450	1	1	1	1	1	1					
S/Nº	12023560	DISTANCIADOR MOTOR 10/21	SPACER MOTOR 10/21	4	4	4	4	4	4					
	12010110	ARANDELA PLANA Fe Zn 8,40MM	WASHER FLAT Fe Zn 8,40MM	4	4	4	4	4	4					
	12009840	ARANDELA ABANICO INOX 8MM	FAN SHAPED WASHER NOX 8MM	4	4	4	4	4	4					
	12010210	TORNILLO EXAGONAL INOX 8MM	HEXAGONAL SCREW INOX 8MM	4	4	4	4	4	4					
2	12024742	CASQUILLO RETEN 10/21	SEAL BUSHING 10/21	1	1	1	1	1	1					
3	12024221	JUNTA CASQUILLO RETEN	SEAL BUSHING GASKET	1	1	1	1	1	1					
	12009868	ARANDELA PLANA INOX 6MM	WASHER FLAT 6 MM INOX.	4	4	4	4	4	4					
	12009882	ARANDELA ABANICO A6 A.304	FAN SHAPED WASHER A.6	4	4	4	4	4	4					
	12010255	TORNILLO EXAGONAL M6 INOX.	HEXAGONAL SCREW M6 INOX.	4	4	4	4	4	4					
	12010056	TORNILLO EXAGONAL M8X40 INOX	HEXAGONAL SCREW M8X40 INO	4	4	4	4	4	4					
4	12024510	RETEN 17X28X7V	RETAINER 28x17x7	2	2	2	2	2	2					
5	12010122	ANILLO DE SEGURIDAD Ø 28X1.2	SAFETY RING 28x1,2	1	1	1	1	1	1					
6	12024786	TURBINA ALAB. REC. Ø280x127	TURBINE ALAB. REC. Ø280x127	1	1	1	_	_	_					
6	12024306	TURBINA RECTA Ø350X127 HANN.	TURBINE RECTA Ø350X127 HAN	_	_	_	1	1	1					
	12024190	ARANDELA SEGURIDAD HANNING	HANNING SAFETY WASHER	1	1	1	1	1	1					
	12010030	TORNILLO EXAGONAL M10X20	HEXAGONAL SCREW M10X20	1	1	1	1	1	1					

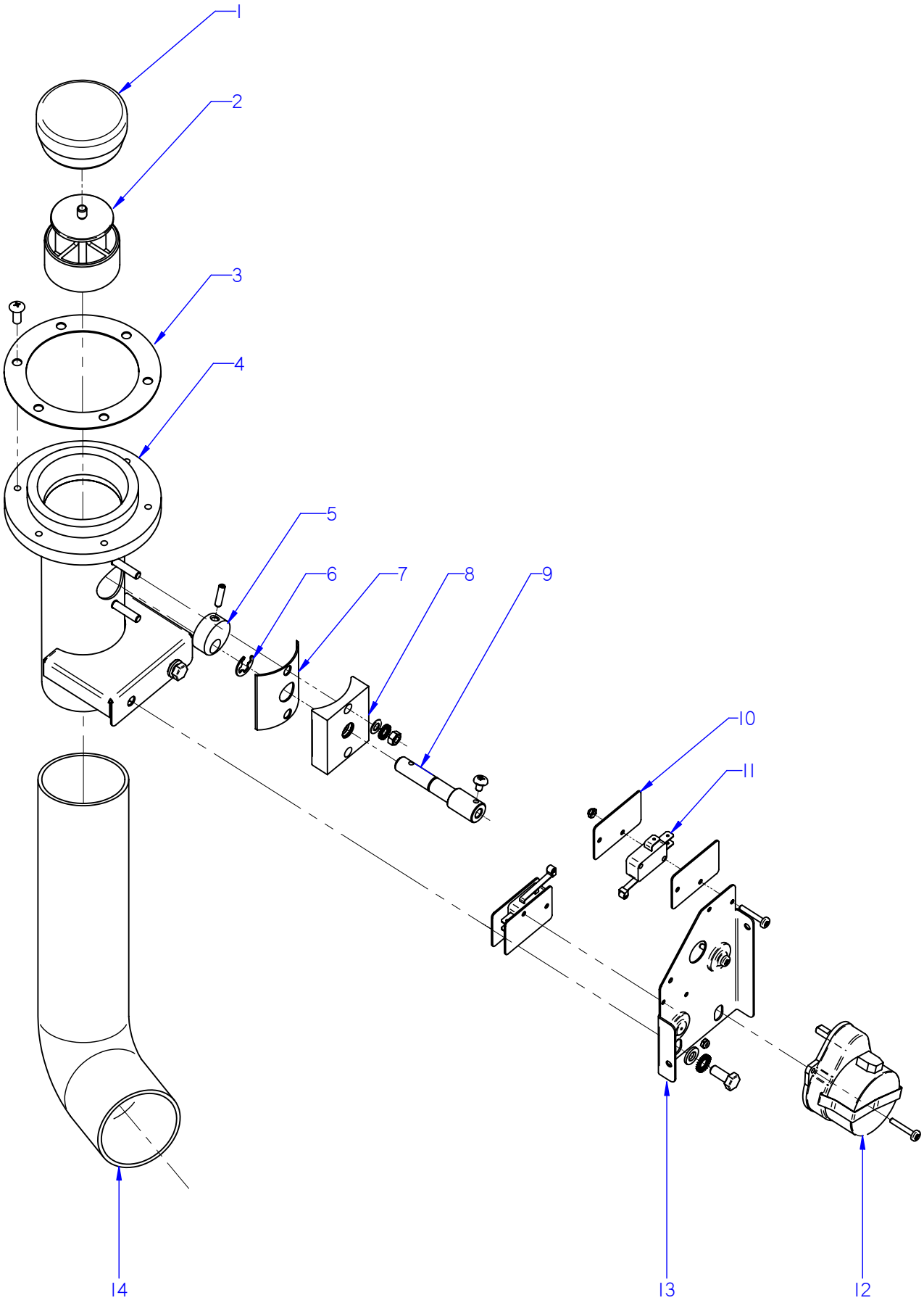

ITEM MARCADO EN COLOR = REPUESTO RECOMENDADO
COLOURED ITEM = RECOMMENDED SPARE PART

Nº plano / N º plane	Firma	Fecha / Date	Denominación / Denomination: CHIMENEA / FLUEPIPE	Lamina / Sheet	
C-3050		2012-09	HORNOS AG; ACG; APG-061/101	5	Fagor Industrial S.Coop. Oñate FAGOR

MOD.	HORNOS / OVEN	ZONA / ZONE	CHIMENEA / FLUEPIPE	PLANO DIAGRAM	C-3050

ITEM	CODIGO REFERENCE	DENOMINACION	DENOMINATION	ACG-061	AG-061	APG-061	ACG-101	AG-101	APG-101			ELIMINADO ELIMINATED	INTRODUCID. INTRODUCED	NOTAS
1	12024520	RETENCION DE VAPORES	CLOSE CHIMNEY	1	1	1	1	1	1					
2	12024500	GUIA RETENCION VAPORES	STEAM RETAINER GUIDE	1	1	1	1	1	1					
3	12023576	JUNTA BASE CHIMENEA	FLUEPIPE BASE SEAL	1	1	1	1	1	1					
S/Nº	12095516	JUNTA TORICA 5x1	O-RING 5x1	6	6	6	6	6	6				17.10.13	
	12010242	TORNIL. APLASTADO M5X13 A 304	FLAT SCREW M.5x13	6	6	6	6	6	6					
4	12022868	CONJUNTO CHIMENEA	COMPLETE CHIMNEY	1	1	1	1	1	1			01.05.14		
4	12104226	CONJUNTO CHIMENEA	COMPLETE CHIMNEY	1	1	1	1	1	1				01.05.14	
	12010126	REMACHE EXAGONAL M.6	HEXAGONAL RIVET M.6	2	2	2	2	2	2					
5	12024328	LEVA EJE CHIMENEA	FLUEPIPE SHAFT CAM	1	1	1	1	1	1					
	12010258	VARILLA ROSCADA M4X16	THREADED ROD M4X16	1	1	1	1	1	1					
6	12010014	ARANDELA DE SEGURIDAD Ø8	SAFETY WASHER Ø8	1	1	1	1	1	1					
7	12023497	JUNTA EJE CHIMENEA	FLUEPIPE SHAFT SEAL	1	1	1	1	1	1					
8	12024436	GUIA EJE CHIMENEA	FLUEPIPE SHAFT GUIDE	1	1	1	1	1	1			01.05.14		
8	12098396	GUIA EJE CHIMENEA	FLUEPIPE SHAFT GUIDE	1	1	1	1	1	1				01.05.14	
	12010274	JUNTA TORICA 9.19x2.62	O-RING 9.19x2.62	1	1	1	1	1	1				01.03.13	
	12009944	ARANDELA A5	FLAT WASHER A.5	2	2	2	2	2	2					
	12010284	TUERCA EXAGONAL M5	HEXAGONAL NUT M.5	2	2	2	2	2	2					
9	12024435	EJE CHIMENEA ELECTRICA	ELECTRIC FLUEPIPE SHAFT	1	1	1	1	1	1			01.05.14		
9	12104228	EJE CHIMENEA ELECTRICA	ELECTRIC FLUEPIPE SHAFT	1	1	1	1	1	1				01.05.14	
	12009876	TORNILLO ALOMADO M4X6 ZINC.	CURVED SCREW M4X6 ZINC.	1	1	1	1	1	1					
10	12009985	PLACA SEPARADORA	SPACER PLATE	4	4	4	4	4	4					
	12010247	TORNILLO ALOMADO M3X20	CURVED SCREW M3X20	4	4	4	4	4	4					
	12010289	TUERCA AUTOBLOCANTE M3	SELF-LOCKING NUT M3	4	4	4	4	4	4					
11	12025193	INTERRUPTOR PUERTA	DOOR SWITCH	2	2	2	2	2	2					
12	12024638	MOTOR CHIMENEA	FLUEPIPE MOTOR	1	1	1	1	1	1					
13	12022146	ESCUA. AMARRE MOTOR CHIMEN.	FLUEPIPE MOTOR FASTENING BRAC	1	1	1	1	1	1					
	12009868	ARANDELA A6	WASHER A6	2	2	2	2	2	2					
	12009882	ARANDELA ABANICO A6 A.304	FAN SHAPED WASHER A.6	2	2	2	2	2	2					
	12010186	TORNILLO EXAGONAL M6X15 A304	HEXAGONAL SCREW M6X15	2	2	2	2	2	2					
14	12024122	TUBO FLEXIBLE Ø53X360	FLEXIBLE TUBE Ø53X360	1	1	1	1	1	1					
	12009962	ABRAZADERA 40*60	CLAMP 40*60	2	2	2	2	2	2					

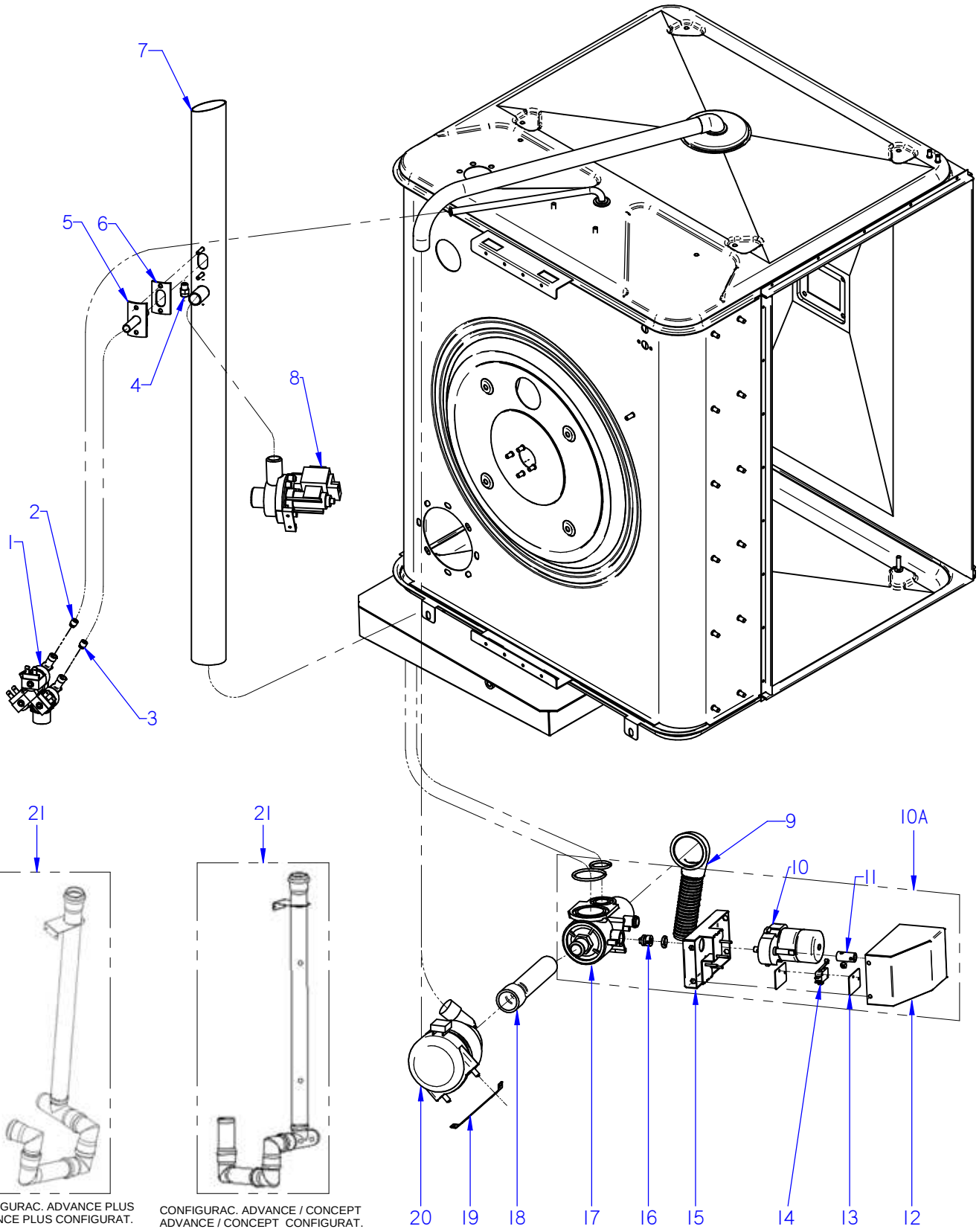

ITEM MARCADO EN COLOR = REPUESTO RECOMENDADO
COLOURED ITEM = RECOMMENDED SPARE PART

Nº plano / N º plane	Firma	Fecha / Date	Denominación / Denomination: CONDUCCIONES DE AGUA / WATER PIPES	Lamina / Sheet	
C-3051		2012-09	HORNOS AG; ACG; APG-061/101	6	Fagor Industrial S.Coop. FAGOR Oñate

MOD.	HORNOS / OVEN	ZONA / ZONE	CONDUCCIONES DE AGUA / WATER PIPES	PLANO DIAGRAM	C-3051

ITEM	CODIGO REFERENCE	DENOMINACION	DENOMINATION	ACG-061	AG-061	APG-061	ACG-101	AG-101	APG-101			ELIMINADO ELIMINATED	INTRODUCID. INTRODUCED	NOTAS
1	12025161	ELECTROVALV. 230VAC 50/60Hz 1V	SOLENOID VALVE 230VAC 1 V	1	_	_	1	_	_					
1	12023921	ELECTR. 230V AC 50/60Hz 3 VIAS A	SOLENOID 230V AC 50/60Hz 3 V	_	1	1	_	1	1			01.08.14		
1	12115418	ELECTR. 230V AC 50/60Hz 3 VIAS A	SOLENOID 230V AC 50/60Hz 3 V	_	1	1	_	1	1				01.08.14	
2	12024509	REGULADOR 0,25L. VERDE	REGULATOR 0.25 L. GREEN	1	1	1	1	1	1					
3	12025263	REGULADOR 1L AMARILLO 255.005	CONTROLLER YELL. 1L 255,005	_	1	1	_	1	1			01.12.13		
3	12096625	REGULADOR 1 L MARFIL	CONTROLLER 1L IVORY	_	1	1	_	1	1				01.12.13	
4	12024000	TOBERA 1/8	NOZZLE 1/8	_	1	1	_	1	1			31.03.13		
4	12049131	BOQUILLA 1/8M-B-1-3	INJECTOR 1/8M-B-1-3	_	1	1	_	1	1				31.03.13	
5	12046239	AMARRE CONDUCC. VAHOS GAS	MOORING DRIVE GAS STEAM	1	_	_	1	_	_					
5	12039468	CONDUCC. VAHOS COMPLETO	COMPLETE VAPOUR DUCT	_	1	1	_	1	1					
6	12023605	JUNTA TUBO INYECTOR	INJECTOR PIPE SEAL	1	1	1	1	1	1					
7	12043803	CHIMENEA COMPLETA ACE 601	COMPL. FLUEPIPE ACE 601	1	_	_	_	_	_					
7	12039631	CHIMENEA COMPLETA 061	COMPLET FLUEPIPE 061	_	1	1	_	_	_			31.03.13		
7	12048029	CHIMENEA COMPLETA 061 AG	COMPLET FLUEPIPE 061 AG	_	1	1	_	_	_				31.03.13	
7	12043845	CHIMENEA COMPLETA ACE 101-102	COMPL. FLUEPIPE ACE 101-102	_	_	_	1	_	_					
7	12039505	CHIMENEA COMPLETA VPE 101	COMPLET FLUEPIPE VPE 101	_	_	_	_	1	1					
S/Nº	12024122	TUBO FLEXIBLE Ø53X360	FLEXIBLE TUBE Ø53X360	1	1	_	1	1	_			01.01.13		
S/Nº	12047901	EMPALME SILICONA Ø53	SILICONE JOINT Ø53	1	1	1	1	1	1				01.01.13	
	12009962	ABRAZADERA 40*60	CLAMP 40*60	2	2	_	2	2	_					
S/Nº	11000003	TUBO SILICONA ALTA Tª Ø53x61	HIGH SILICON PIPE Tº Ø53x61	_	_	1	_	_	1					
	12007943	ABRAZADERA ELASTICA 62*66	ELAST. CLAMP 62*66	_	_	2	_	_	2					
8	12039546	MOTOBOMBA 230V AC 1N 50/60Hz	PUMP 230V AC 50/60Hz 30W 1N	_	1	1	_	1	1					
	12009944	ARANDELA A5	FLAT WASHER A.5	_	2	2	_	2	2					
	12010221	TORNILLO EXAGONAL M5X15	HEXAGONAL BOLT M5X15	_	2	2	_	2	2					
9	12024473	MANGUERA DESAGUE	DRAIN HOSE	_	_	1	_	_	1			02.12.12		
10A	**12093684**	**KIT VALVULA DESAGUE ADVAN.**	**VALVE DRAIN ADVANCE KIT**	_	_	**1**	_	_	**1**				**12.07.13**	
10	12024754	MOTORREDUCTOR 230V AC 1N	MOTOREDUCER 230V AC 1N	_	_	1	_	_	1			02.03.15		
10	12122403	MOTORREDUCTOR 230V AC 1N	MOTOREDUCER 230V AC 1N	_	_	1	_	_	1				02.03.15	
11	12023906	CASQUILLO MOTOR MICRO	MICRO MOTOR BUSHING	_	_	1	_	_	1					
	12009876	TORNILLO ALOMADO M4X6 H.ZIN.	CURVED SCREW M4X6 H.ZIN.	_	_	2	_	_	2					
	12010262	TORNILLO AVELLANADO M4X15	COUNTERSUNK SCREW M.4x15	_	_	2	_	_	2					

MOD.	HORNOS / OVEN	ZONA / ZONE	CONDUCCIONES DE AGUA / WATER PIPES	PLANO DIAGRAM	C-3051

ITEM	CODIGO REFERENCE	DENOMINACION	DENOMINATION	ACG-061	AG-061	APG-061	ACG-101	AG-101	APG-101			ELIMINADO ELIMINATED	INTRODUCID. INTRODUCED	NOTAS
12	12003203	TAPA SISTEMA LAVADO	TOP WASH SYSTEM	_	_	1	_	_	1			02.03.15		
12	12122407	TAPA SISTEMA LAVADO	TOP WASH SYSTEM	_	_	1	_	_	1				02.03.15	
	12010242	TORNIL. APLASTADO M5X13 A 304	FLAT SCREW M.5x13	_	_	4	_	_	4					
13	12009985	PLACA SEPARADORA	SPACER PLATE	_	_	4	_	_	4					
	12010247	TORNILLO ALOMADO M3X20	CURVED SCREW M3X20	_	_	7	_	_	7					
	12010289	TUERCA AUTOBLOCANTE M3	SELF-LOCKING NUT M3	_	_	7	_	_	7					
14	12025193	INTERRUPTOR PUERTA	DOOR SWITCH	_	_	2	_	_	2					
15	12003183	SOPORTE MICROS LAVADO	MICROS WASH STAND	_	_	1	_	_	1			02.03.15		
15	12122404	SOPORTE MICROS LAVADO	MICROS WASH STAND	_	_	1	_	_	1				02.03.15	
16	12023796	PUNTA ACOPLE MOTOR A VALVUL	CONN. POINT MOTOR TO VALVE	_	_	1	_	_	1					
S/Nº	12019645	JUNTA TORICA Ø10x3.5	O-RING Ø10X3.5	_	_	1	_	_	1					
S/Nº	12010273	MANG. SUJEC. 4X14 DIN1481	CLAMPING SLEEVE 4x14 DIN 1481	_	_	1	_	_	1					
17	12024796	CUERPO VALVULA COMPLETO	COMPLETE VALVE BODY	_	_	1	_	_	1					
	12010081	JUNTA TORICA Ø52X3,5	O-RING Ø52X3.5	_	_	1	_	_	1					
	12010131	JUNTA TORICA Ø33x3,5	O-RING Ø33x3.5	_	_	1	_	_	1					
	12024532	JUNTA TEFLON VALVULA	TEFLON VALVE BOARD	_	_	2	_	_	2					
	12009181	JUNTA TEFLON VALVULA	TEFLON VALVE BOARD	_	_	2	_	_	2					
18	12024407	GOMA VALVULA BOMBA GAS	PUMP VALVE RUBBER GAZ	_	_	1	_	_	1					
	12010023	ABRAZADERA 20-32	CLAMP 20-32	_	_	1	_	_	1					
	12009997	ABRAZADERA 25-40	CLAMP 25-40	_	_	1	_	_	1					
19	12001778	SOPORTE BOMBA LAVADO	WASH PUMP SUPPORT	_	_	1	_	_	1					
	12010090	REMACHE AVINOX Ø4X7,5MM	AVINOX RIVET Ø4X7,5MM	_	_	4	_	_	4					
20	12024708	MOTOBOMBA ACLARADO	MOTOR-PUMP	_	_	1	_	_	1					
S/Nº	12025198	MANGUERA ENTRADA AGUA	WATER INLET HOSE	1	1	1	1	1	1					
S/Nº	12024463	CONDENSADOR ELEC. 250V VDE	CONDENSER ELEC. 250V VDE	1	1	1	1	1	1					
21	12047404	MOD CONJUNTO DESAGUE ADV	ADV DRAIN SET MODEL	1	1	1	1	1	1				03,12,12	

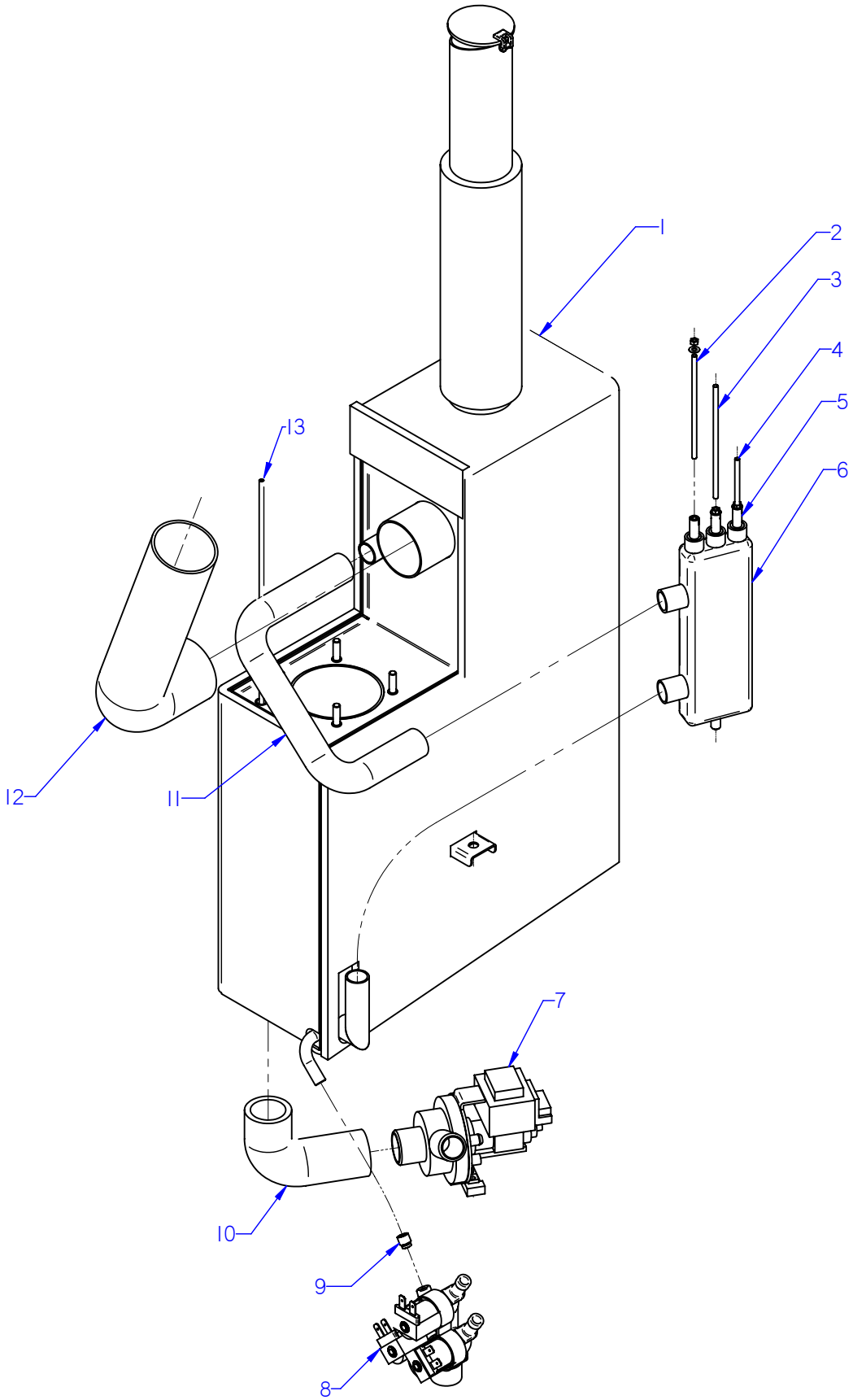

ITEM MARCADO EN COLOR = REPUESTO RECOMENDADO
COLOURED ITEM = RECOMMENDED SPARE PART

Nº plano / N º plane	Firma	Fecha / Date	Denominación / Denomination: CIRCUITO DE VAPOR / STEAM CIRCUIT	Lamina / Sheet	
C-3052		2012-09	HORNOS AG; APG-061 / 101	7	Fagor Industrial S.Coop. FAGOR Oñate

MOD.	HORNOS / OVEN	ZONA / ZONE	CIRCUITO DE VAPOR / STEAM CIRCUIT	PLANO DIAGRAM	C-3052

ITEM	CODIGO REFERENCE	DENOMINACION	DENOMINATION	AG-061	APG-061	AG-101	APG-101					ELIMINADO ELIMINATED	INTRODUCID. INTRODUCED	NOTAS
1	**12046069**	**KIT GENERADOR VAPOR 601**	**STEAM GENERATOR 601 KIT**	**1**	**1**	_	_							
1	**12046099**	**KIT GENERADOR VAPOR 101**	**STEAM GENERATOR 101 KIT**	_	_	**1**	**1**							
2	12023573	ELECTRODO ALTO	HIGH LEVEL ELECTRODE	1	1	1	1							
3	12023574	ELECTRODO BAJO	LOW LEVEL ELECTRODE	1	1	1	1							
4	12023575	ELECTRODO DE MASA	EARTH ELECTRODE	1	1	1	1							
	12009987	ARANDELA A4	FLAT WASHER A4	3	3	3	3							
	12009839	TUERCA EXAGONAL M4	HEXAGONAL NUT M.4º	3	3	3	3							
5	12024460	GUIA AISLANTE	INSULATION GUIDE	3	3	3	3							
6	12024419	BOTE DE NIVELES	LEVELS VESSEL	1	1	1	1					02.06.14		
6	12113061	BOTE DE NIVELES INOX	LEVELS VESSEL S.STEEL	1	1	1	1						02.06.14	
	12010044	TUERCA EXAGONAL M8 PLASTIC	HEXAGONAL NUT M8 PLASTIC	1	1	1	1							
S/Nº	11000157	TUBO SILICONA Tº Ø 26*18	HIGH SILICON PIPE Tº Ø 26*18	2	2	2	2							
	12009628	ABRAZADERA ELASTICA 26,7*28,1	ELAST. CLAMP 26,7*28,1	4	4	4	4							
7	12039546	MOTOBOMBA 230V AC 1N 50/60Hz	PUMP 230V AC 50/60Hz 30W 1N	1	1	1	1							
8	12023921	ELECTR. 230V AC 50/60Hz 3 VIAS A	SOLENOID 230V AC 50/60Hz 3 V	1	1	1	1					01.08.14		
8	12115418	ELECTR. 230V AC 50/60Hz 3 VIAS A	SOLENOID 230V AC 50/60Hz 3 V	1	1	1	1						01.08.14	
S/Nº	11000083	T. GOMA NEGRA Ø17*10	BLACK RUBBER PIPE Ø17*10	1	1	1	1							
	12010036	ABRAZADERA 12*20	CLAMP 12-20	2	2	2	2							
9	12024045	REGULADOR 8L 54.034 ROJO	REGULATOR 8L RED 54.034	1	1	1	1					10.11.13		
9	12096626	REGULADOR 8 L AZUL	BLUE REGULATOR 8L	1	1	1	1						10.11.13	
10	12039649	TUBO DESAGÜE GENERADOR	DRAIN TUBE GENERATOR	1	1	1	1							
	12009997	ABRAZADERA 25-40	CLAMP 25-40	2	2	2	2							
11	12041641	TUBO NIVELES GENERA. 061-101	TUBE GENERA. LEVELS 061-101	1	1	1	1							
12	12041855	TUBO FLEXIBLE Ø53x360 VARIL INOX	FLEXIBLE TUBE ROD Ø53x360 IN	1	1	1	1					01.01.13		
12	12047940	EMPALME GENERADOR AG 061	GENERATOR JOINT AG 061	1	1	_	_						01.01.13	
12	12048044	EMPALME GENERADOR AG 101	GENERATOR JOINT AG 101	_	_	1	1						01.01.13	
	12009962	ABRAZADERA 40-60	CLAMP 40-60	2	2	2	2							
S/Nº	12047901	EMPALME SILICONA Ø53	SILICONE JOINT Ø53	2	2	2	2						01.01.13	
13	12023901	CONJUN. TERMOPAR VAPOR	STEAM THERMOCOUPLE UNIT	1	1	1	1							

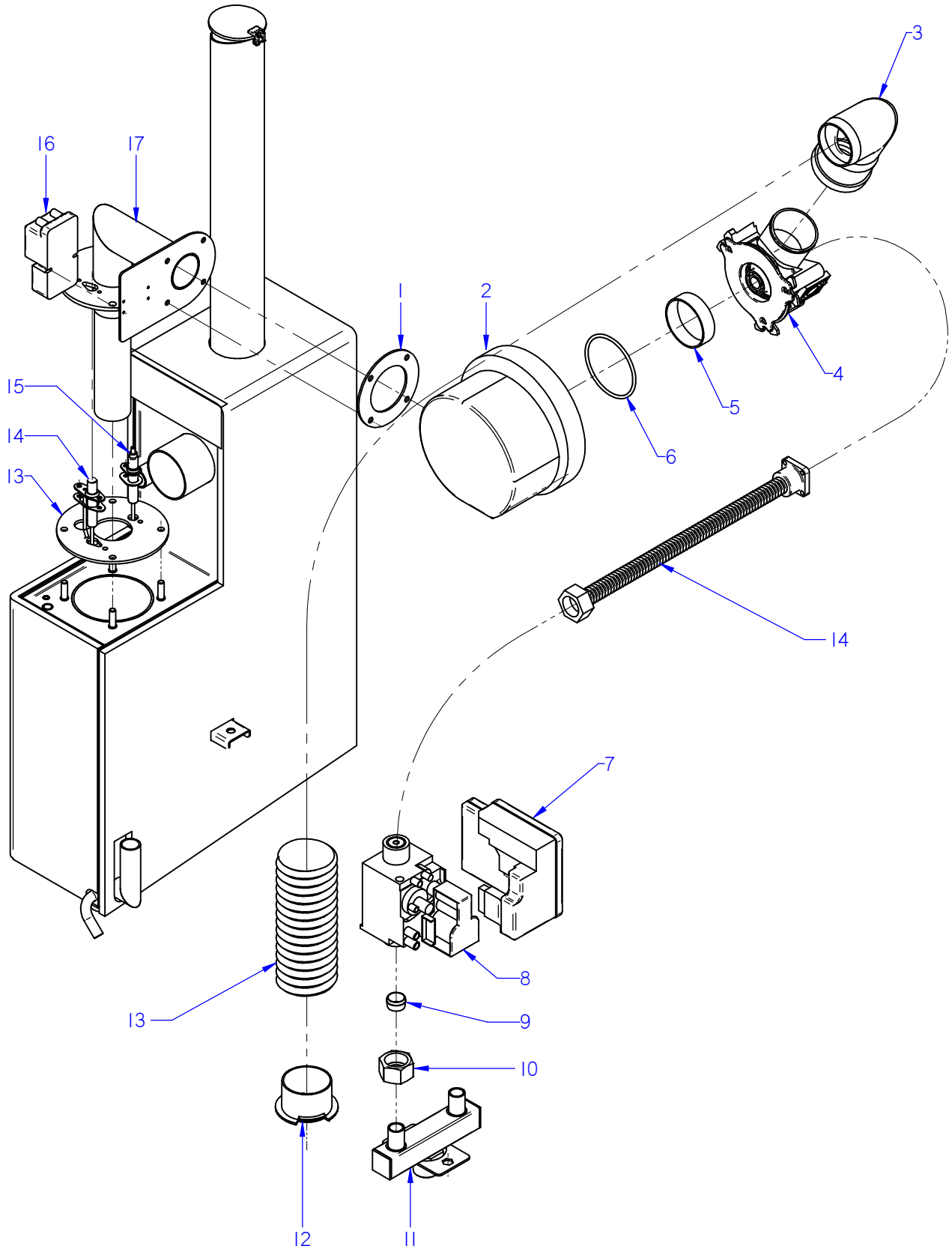

ITEM MARCADO EN COLOR = REPUESTO RECOMENDADO
COLOURED ITEM = RECOMMENDED SPARE PART

Nº plano / N º plane	Firma / Signature	Fecha / Date	Denominación / Denomination: FUNC. GAS GENERADOR / FUNCT. GAS GENERATOR	Lamina / Sheet	
C-3053	Iban R.	2014-09	HORNOS AG; APG-061/101	8	Fagor Industrial S.Coop. FAGOR Oñate

MOD.	HORNOS / OVEN	ZONA / ZONE	FUNCIONAL GAS GENERADOR FUNCTIONAL GAS GENERATOR	PLANO DIAGRAM	C-3053

ITEM	CODIGO REFERENCE	DENOMINACION	DENOMINATION	AG-061	APG-061	AG-101	APG-101					ELIMINADO ELIMINATED	INTRODUCID. INTRODUCED	NOTAS
1	12045252	JUNTA ACOP.SOPLANTE GRAFITO	JOINT COU. GRAPHITE BLOWER	1	1	1	1							
	12009944	ARANDELA A5	FLAT WASHER A.5	4	4	4	4							
	12009890	ARANDELA ABANICO A5 A.304	FAN SHAPED WASHER A.5	4	4	4	4							
	12010284	TORNILLO EXAGONAL M5 INOX.	HEXAGONAL SCREW M5 INOX.	4	4	4	4							
	12010221	TORNILLO EXAGONAL M5X15 INOX	HEXAGONAL SCREW M5X15 INO	4	4	4	4							
2	12044607	SOPLANTE NRG 118 55kw	BLOWER NRG 118 55kw	1	1	1	1							
3	12044447	TUBO DESAGUE ADV 01	DRAIN PIPE ADV 01	1	1	1	1							
4	12039540	MIXER COMPLETO	MIXER COMPLETE	1	1	1	1							
	12009868	ARANDELA PLANA INOX 6MM	WASHER FLAT 6 MM INOX.	3	3	3	3							
	12010084	TORNILLO ALLEN INOX M6X40MM	SCREW ALLEN INOX M6X40MM	3	3	3	3							
S/Nº	12041612	JUNTA TORICA 63X3	O-RING 63X3	1	1	1	1							
5	12039656	ARO VENTURI CIEGO	BLIND RING VENTURI	1	1	1	1							
6	12009940	JUNTA TORICA114x3	O-RING 114x3	1	1	1	1							
7	12039440	CAJA CONTROL DBC 579	DBC CONTROL BOX 579	1	1	1	1							
8	12046364	VALVULA REGUL 50HZ ADV	ADV 50HZ VALVE CONTROLL.	1	1	1	1							
8	12046365	VALVULA REGUL 60HZ ADV	ADV 60HZ VALVE CONTROLL.	1	1	1	1							
9	12045658	TOBERA Ø 3,5 BP	NOZZLE Ø 3,5 BP	1	1	1	1							
9	12039565	TOBERA Ø 4,5 GN	NOZZLE Ø 4,5 GN	1	1	1	1							
10	12008085	TUERCA 3/4	NUT 3/4	1	1	1	1					18.02.13		
10	12048850	TUERCA G 3/4	NUT G 3/4	1	1	1	1						18.02.13	
S/Nº	12008775	BICONO Ø16	BICONE Ø16	1	1	1	1							
11	12041050	ENTRADA GAS ADV 061/01 SUB	ADV GAS INLET 061/01 SUB	1	1	1	1							
	12009944	ARANDELA A5	FLAT WASHER A.5	2	2	2	2							
	12009890	ARANDELA ABANICO A5 A.304	FAN SHAPED WASHER A.5	2	2	2	2							
	12010221	TORNILLO EXAGONAL M5X15 INOX	HEXAGONAL SCREW M5X15 INO	2	2	2	2							
12	12039679	AMARRE TUBOS AIRE	MOORING PIPES AIR	1	1	1	1							
13	11000232	TUBO AIRE VULCANO PUZ 50	AIR TUBE VULCANO PUZ 50	1	1	1	1							
14	12039568	TUBO GAS FLEXIBLE 500	FLEXIBLE GAS PIPE 500	1	1	1	1							

MOD.	HORNOS / OVEN	ZONA / ZONE	FUNCIONAL GAS GENERADOR FUNCTIONAL GAS GENERATOR	PLANO DIAGRAM	C-3053

ITEM	CODIGO REFERENCE	DENOMINACION	DENOMINATION	AG-061	APG-061	AG-101	APG-101					ELIMINADO ELIMINATED	INTRODUCID. INTRODUCED	NOTAS
13	12039592	061 JUNTA QUEMADOR GENERA	GENERATOR GASKET BURNER	1	1	1	1							
	12009868	ARANDELA PLANA INOX 6MM	WASHER FLAT 6 MM INOX.	4	4	4	4							
	12009882	ARANDELA ABANICO A6 A.304	FAN SHAPED WASHER A.6	4	4	4	4							
	12010130	TUERCA EXAGONAL M6 LATON	HEXAGONAL NUT M6 BRASS	4	4	4	4							
14	12039585	ELECTRODO IGNICION GEN 061	IGNITION ELECTRODEGEN 061	1	1	1	1							
S/Nº	12039587	JUNTA BUJIA GENERADOR 06/101	PLUG BOARD GENERATOR 06/10	1	1	1	1							
	12045140	TORNILLO M4X10 LATON	SCREW M4 BRASS	2	2	2	2							
	12010244	TUERCA EXAGONAL M4 LATON	HEXAGONAL NUT M4 BRASS	2	2	2	2							
15	12039586	ELECTRODO DETECCI. 6/101/102	DETECTION ELECTRODE 6/101/1	1	1	1	1							
S/Nº	12039450	JUNTA BUJIA CONVECCION 102	SPARK CONVECTI. BOARD 102	1	1	1	1							
	12045140	TORNILLO M4X10 LATON	SCREW M4 BRASS	2	2	2	2							
	12010244	TUERCA EXAGONAL M4 LATON	HEXAGONAL NUT M4 BRASS	2	2	2	2							
16	12039544	CHISPA BRAHMA	BRAHMA SPARK	1	1	1	1							
	12009971	TORNILLO ALOMADO M3X30 H.ZIN	CURVED SCREW M3X30 H.ZINC	2	2	2	2							
	12010289	TUERCA AUTOBLOCANTE M3	SELF-LOCKING NUT M3	2	2	2	2							
17	12039583	QUEMADOR GENERADOR 06/101	BURNER GENERATOR 06/101	1	1	1	1							

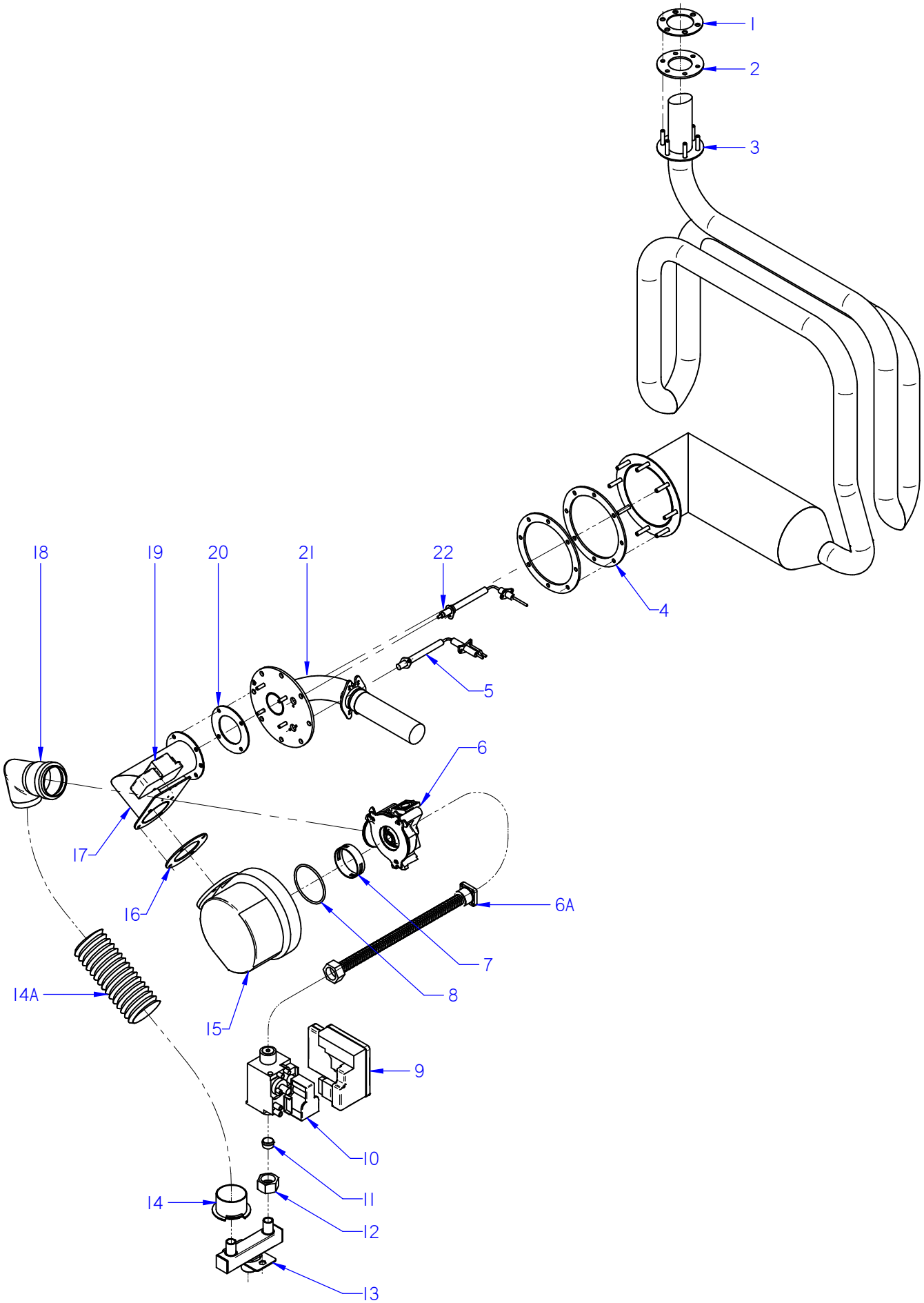

ITEM MARCADO EN COLOR = REPUESTO RECOMENDADO
COLOURED ITEM = RECOMMENDED SPARE PART

Nº plano / N º plane	Firma / Signature	Fecha / Date	Denominación / Denomination:FUNC. GAS CONVECCION / FUNCT. GAS CONVECTION	Lamina / Sheet	
C-3054	Iban R.	2014-09	HORNOS AG; ACG; APG-061/101	9	Fagor Industrial S.Coop. FAGOR Oñate

MOD.	HORNOS / OVEN	ZONA / ZONE	FUNCIONAL GAS CONVECCION FUNCTIONAL GAS CONVECTION	PLANO DIAGRAM	C-3054

ITEM	CODIGO REFERENCE	DENOMINACION	DENOMINATION	ACG-061	AG-061	APG-061	ACG-101	AG-101	APG-101			ELIMINADO ELIMINATED	INTRODUCID. INTRODUCED	NOTAS
1	12039653	061 CHAPA CIERRE INTERCAMB.	EXCHANGES CLOSING PLATE 06	1	1	1	_	_	_					
1	12039517	AMARRE SALIDA CUERPO INT 101	INSIDE OUT BODY TIE 101	_	_	_	1	1	1					
2	12039652	JUNTA SALIDA INTERCAMBOR 061	OUTPUT BOARD EXCHANG. 061	1	1	1	_	_	_					
2	12039474	JUNTA SALIDA INTERCAMBOR 201	OUTPUT BOARD EXCHANG. 201	_	_	_	1	1	1					
	12009868	ARANDELA PLANA INOX 6MM	WASHER FLAT 6 MM INOX.	6	6	6	6	6	6					
	12010130	TUERCA EXAGONAL M6 LATON	HEXAGONAL NUT M6 BRASS	6	6	6	6	6	6					
3	12039650	INTERCAMBIAD. CALOR 061 ADV	HEAT EXCHANGER 061 ADV	1	1	1	_	_	_					
3	12039552	INTERCAMBIAD. CALOR 101ADV	HEAT EXCHANGER 101 ADV	_	_	_	1	1	1					
4	12039651	061 JUNTA ENTRADA INTERCAM	061 EXCHANGER INPUT BOARD	2	2	2	_	_	_					
4	12039559	JUNTA AMARRE QUEMADOR 101	BURNER TIE BOARD 101	_	_	_	2	2	2					
	12009868	ARANDELA PLANA INOX 6MM	WASHER FLAT 6 MM INOX.	8	8	8	8	8	8					
	12009882	ARANDELA ABANICO A6 A.304	FAN SHAPED WASHER A.6	8	8	8	8	8	8					
	12010130	TUERCA EXAGONAL M6 LATON	HEXAGONAL NUT M6 BRASS	8	8	8	8	8	8					
5	12039684	BUJIA CONVECCION 061	SPARK CONVECTION 061	1	1	1	1	1	1					
S/Nº	12039449	102 JUNTA BUJIA CONVECCION	102 SPARK CONVECTI. BOARD	1	1	1	1	1	1					
	12045140	TORNILLO M4X10 LATON	SCREW M4 BRASS	2	2	2	2	2	2					
	12010244	TUERCA EXAGONAL M4 LATON	HEXAGONAL NUT M4 BRASS	2	2	2	2	2	2					
6	12039540	MIXER COMPLETO	MIXER COMPLETE	1	1	1	1	1	1					
	12009868	ARANDELA PLANA INOX 6MM	WASHER FLAT 6 MM INOX.	3	3	3	3	3	3					
	12010084	TORNILLO ALLEN INOX M6X40MM	SCREW ALLEN INOX M6X40MM	3	3	3	3	3	3					
S/Nº	12041612	JUNTA TORICA 63X3	O-RING 63X3	1	1	1	1	1	1					
6A	12039567	TUBO GAS FLEXIBLE 300-90º	FLEXIBLE GAS PIPE 300-90º	1	1	1	1	1	1					
7	12039541	ARO VENTURI ROJO	RED RING VENTURI	1	1	1	1	1	1					
8	12009940	JUNTA TORICA114x3	O-RING 114x3	1	1	1	1	1	1					
9	12039440	CAJA CONTROL DBC 579	DBC CONTROL BOX 579	1	1	1	1	1	1					
10	12046364	VALVULA REGUL 50HZ ADV	ADV 50HZ VALVE CONTROLL.	1	1	1	1	1	1					
10	12046365	VALVULA REGUL 60HZ ADV	ADV 60HZ VALVE CONTROLL.	1	1	1	1	1	1					
11	12039657	TOBERA Ø4,4 BP	NOZZLE Ø4,4 BP	1	1	1	_	_	_					
11	12039566	TOBERA Ø6 GN	NOZZLE Ø6 GN	1	1	1	_	_	_					
11	12039570	TOBERA Ø5 BP	NOZZLE Ø5 BP	_	_	_	1	1	1					
11	12039569	TOBERA Ø7 GN	NOZZLE Ø7 GN	_	_	_	1	1	1					

MOD.	HORNOS / OVEN	ZONA / ZONE	FUNCIONAL GAS CONVECCION FUNCTIONAL GAS CONVECTION	PLANO DIAGRAM	C-3054

ITEM	CODIGO REFERENCE	DENOMINACION	DENOMINATION	ACG-061	AG-061	APG-061	ACG-101	AG-101	APG-101			ELIMINADO ELIMINATED	INTRODUCID. INTRODUCED	NOTAS
12	12008085	TUERCA 3/4	NUT 3/4	_	1	1	_	1	1			18.02.13		
12	12048850	TUERCA G 3/4	NUT G 3/4	_	1	1	_	1	1				18.02.13	
S/Nº	12008775	BICONO Ø16	BICONE Ø16	_	1	1	_	1	1					
13	12041050	ENTRADA COMP ADV 061/01 SUB	ADV GAS INLET 061/01 SUB	_	1	1	_	1	1					
	12009944	ARANDELA A5	FLAT WASHER A.5	_	2	2	_	2	2					
	12009890	ARANDELA ABANICO A5 A.304	FAN SHAPED WASHER A.5	_	2	2	_	2	2					
	12010221	TORNILLO EXAGONAL M5X15 INOX	HEXAGONAL SCREW M5X15 INC	_	2	2	_	2	2					
14	12039679	AMARRE TUBOS AIRE	MOORING PIPES AIR	1	1	1	1	1	1					
14A	11000232	TUBO AIRE VULCANO PUZ 50	AIR TUBE VULCANO PUZ 50	1	1	1	1	1	1					
15	12044607	SOPLANTE NRG 118 55kw	BLOWER NRG 118 55kw	1	1	1	1	1	1					
16	12045252	JUNTA ACOP.SOPLANTE GRAFITO	JOINT COU. GRAPHITE BLOWER	1	1	1	1	1	1					
	12009944	ARANDELA A5	FLAT WASHER A.5	4	4	4	4	4	4					
	12009890	ARANDELA ABANICO A5 A.304	FAN SHAPED WASHER A.5	4	4	4	4	4	4					
	12010284	TORNILLO EXAGONAL M5 INOX.	HEXAGONAL SCREW M5 INOX.	4	4	4	4	4	4					
17	12039654	CAMARA SILENCIADOR 061	CHAMBER MUFFLER 061	1	1	1	_	_	_					
17	12039560	CAMARA SILENCIADOR 101	CHAMBER MUFFLER 101	_	_	_	1	1	1					
	12010221	TORNILLO EXAGONAL M5X15 INOX	HEXAGONAL SCREW M5X15 INC	4	4	4	4	4	4					
18	12044447	TUBO DESAGUE ADV 01	DRAIN PIPE ADV 01	1	1	1	1	1	1					
19	12039544	CHISPA BRAHMA	BRAHMA SPARK	1	1	1	1	1	1					
	12009971	TORNILLO ALOMADO M3X30 H.ZIN	CURVED SCREW M3X30 H.ZINC	2	2	2	2	2	2					
	12010289	TUERCA AUTOBLOCANTE M3	SELF-LOCKING NUT M3	2	2	2	2	2	2					
20	12045252	JUNTA ACOP.SOPLANTE GRAFITO	JOINT COU. GRAPHITE BLOWER	1	1	1	1	1	1					
	12009944	ARANDELA A5	FLAT WASHER A.5	4	4	4	4	4	4					
	12009890	ARANDELA ABANICO A5 A.304	FAN SHAPED WASHER A.5	4	4	4	4	4	4					
	12010284	TORNILLO EXAGONAL M5 INOX.	HEXAGONAL SCREW M5 INOX.	4	4	4	4	4	4					
21	12039680	QUEMADOR CONVECCION 061	BURNER CONVECTION 061	1	1	1	_	_	_					
21	12039556	QUEMADOR CONVECCION 101	BURNER CONVECTION 101	_	_	_	1	1	1					
22	12039685	DETECTOR CONVECCION 061	CONVECTION DETECTOR 061	1	1	1	1	1	1					
S/Nº	12039450	JUNTA BUJIA CONVECCION 102	PLUG BOARD CONVECTION 102	1	1	1	1	1	1					
	12045140	TORNILLO M4X10 LATON	SCREW M4 BRASS	2	2	2	2	2	2					
	12010244	TUERCA EXAGONAL M4 LATON	HEXAGONAL NUT M4 BRASS	2	2	2	2	2	2					

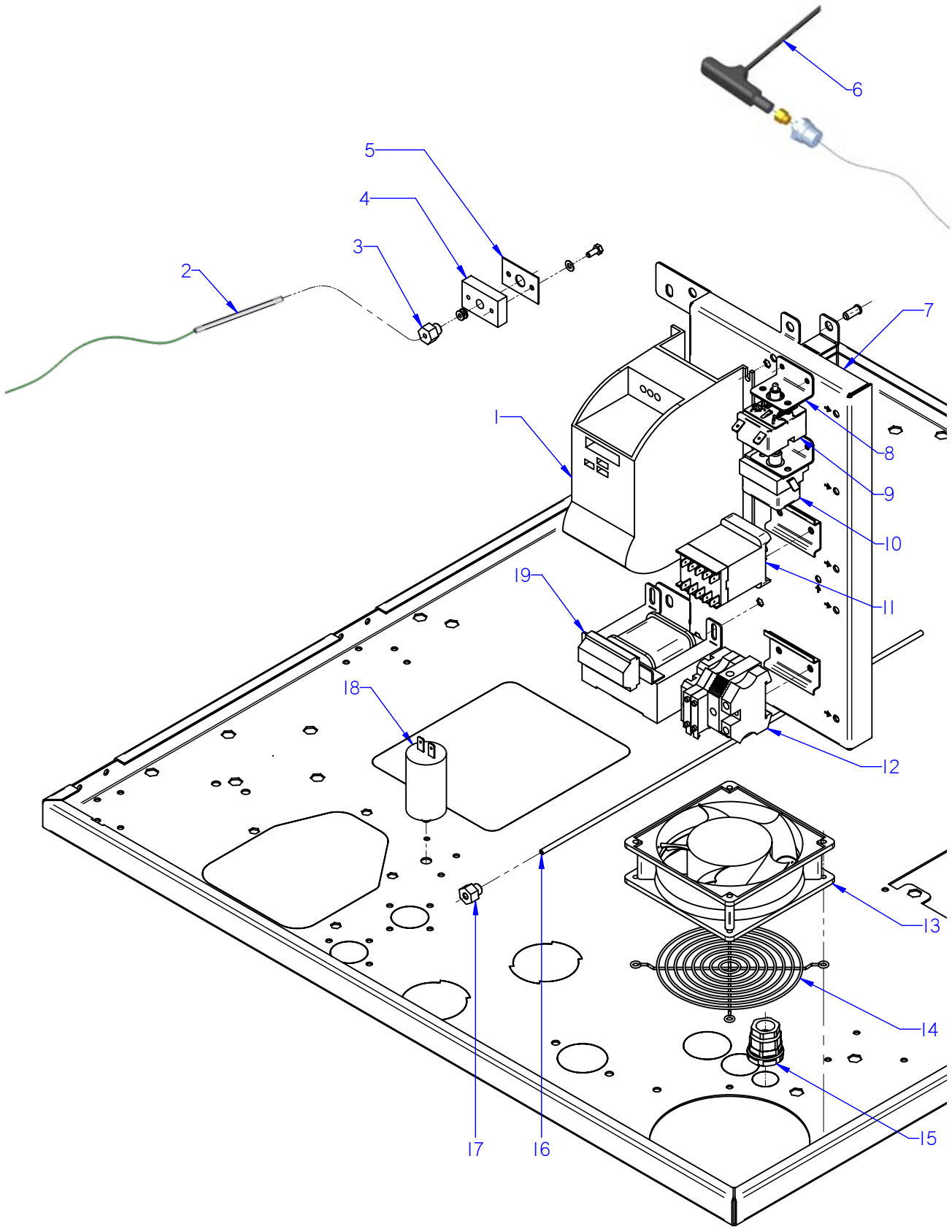

ITEM MARCADO EN COLOR = REPUESTO RECOMENDADO
COLOURED ITEM = RECOMMENDED SPARE PART

Nº plano / N º plane	Firma	Fecha / Date	Denominación / Denomination: CUADRO ELECTRICO / ELECTRIC PANEL	Lamina / Sheet	
C-3055		2012-09	HORNOS AG; ACG; APG-061/101	10	Fagor Industrial S.Coop. FAGOR Oñate

MOD.	HORNOS / OVEN	ZONA / ZONE	CUADRO ELECTRICO / ELECTRIC PANEL	PLANO DIAGRAM	C-3055

ITEM	CODIGO REFERENCE	DENOMINACION	DENOMINATION	ACG-061	AG-061	APG-061	ACG-101	AG-101	APG-101			ELIMINADO ELIMINATED	INTRODUCID. INTRODUCED	NOTAS
1	12024329	VARIADOR FRECUENCIA SIE 0,37KW	FREQUENCY VARIATOR SIE 0.37	1	1	1	1	1	1			26.02.13		
1	12048798	REP VARIADOR REGULADO ADV	REGULATED VARIATOR ADV	1	1	1	1	1	1				26.02.13	
	12009928	ARANDELA ABANICO A4 A.304	FAN SHAPED WASHER A.4	6	6	6	6	6	6					
	12010278	TORNILLO ALOMADO M4X10	CURVED SCREW M.4x10	6	6	6	6	6	6					
S/Nº	12025235	CONECTOR PASO 3,96MM 8 VIAS	CONNECTOR ROUTES 3,96MM 8	1	1	1	1	1	1					
2	12024642	CONJUN. TERMOPAR CAMARA (K)	CHAMBER THERMOCOUPLE UNIT (K)	1	1	1	1	1	1					
3	12023581	RACORD CIERRE SONDA	PROBE CLOSING ADAPTOR	2	2	2	2	2	2					
S/Nº	12024247	BICONO CIERRE SONDA	PROBE CLOSING BICONE	1	1	1	1	1	1					
4	12023737	BASE CIERRE SONDA	FIXING CORE PROBE	1	1	1	1	1	1					
5	12023504	JUNTA PASAMUROS SIMPLE	SIMPLE	1	1	1	1	1	1					
	12009987	ARANDELA A4	FLAT WASHER A.4	4	4	4	4	4	4					
	12010249	TORNILLO EXAGONAL M4X10	HEXAGONAL BOLT M4X10	4	4	4	4	4	4					
6	12039548	SONDA PINCHO ADVANCE	ADVANCE PROBE PINCHO	1	1	1	1	1	1					
	12010110	ARANDELA Ø 8.4X20X1.5	FLAT WASHER Ø 8.4X20X1.5	1	1	1	1	1	1					
	12040566	CONTRATUERCA H 1/4"	COUNTERNUT H 1/4"	1	1	1	1	1	1					
7	12039677	CHAPA CUADRO ELECT APG	ELECTRICAL PANEL APG	1	1	1	1	1	1					
	12010158	REMACHE EXAGONAL M.4	HEXAGONAL RIVET M.4	6	6	6	6	6	6					
	12009944	ARANDELA A5	FLAT WASHER A.5	3	3	3	3	3	3					
	12010221	TORNILLO EXAGONAL M5x15	HEXAGONAL SCREW M.5x15	3	3	3	3	3	3					
8	12022001	SOPORTE TERMOS VAPOR	THERMOSTAT SUPPORT	2	2	2	2	2	2					
	12023499	TUERCA M.10x1 EGO 00.00600.075	NUT M.10x1 EGO 00.00600.075	2	2	2	2	2	2					
9	12024591	TERMOSTATO LIMITADOR 10/21	LIMITER THERMOSTAT10/21	1	1	1	1	1	1					
10	12024884	TERMOSTATO LIMITADOR CORTE	THERMOSTAT LIMITER	_	1	1	_	1	1					
11	12024011	CONTACTOR 230 V. 50-60 HZ	230 V. 50-60 HZ CONTACTOR	1	1	1	1	1	1					
12	12025158	BORNAS PORTA FUSIBLES	FUSE HOLDER TERMINAL	2	2	2	2	2	2					
S/Nº	12024152	FUSIBLE 10A Ø5MM 20X5	10A Ø5MM 20X5 FUSE	2	2	2	2	2	2					
	12024743	BORNA TIERRA 10 WPE-10103.O	EARTH TERMINAL10 WPE-10103.O	1	1	1	1	1	1					
	12024199	TOPE FINAL BORNA 10mm2 UL	FINAL STOP TERMINAL UL 10	1	1	1	1	1	1					
13	12023862	VENTILADOR 230V.50-60HZ	FAN 230V 50/60HZ	2	2	2	2	2	2			02.09.13		
13	12049846	VENTILADOR 230V.50-60HZ 53W	FAN 230V 50/60HZ 53W	2	2	2	2	2	2			28.10.13	02.09.13	
13	12023862	VENTILADOR 230V.50-60HZ	FAN 230V 50/60HZ	2	2	2	2	2	2				28.10.13	

MOD.	HORNOS / OVEN	ZONA / ZONE	CUADRO ELECTRICO / ELECTRIC PANEL	PLANO DIAGRAM	C-3055

ITEM	CODIGO REFERENCE	DENOMINACION	DENOMINATION	ACG-061	AG-061	APG-061	ACG-101	AG-101	APG-101			ELIMINADO ELIMINATED	INTRODUCID. INTRODUCED	NOTAS
14	12024615	PROTECCION VENTILADOR	FAN PROTECTION	1	1	1	1	1	1					
	12010087	REMACHE PLASTICO D4 L7,5-8,5	PLASTIC RIVET D4 L7,5-8,5	4	4	4	4	4	4					
15	12009966	PRENSA ESTOPAS	STUFFING BOX	1	1	1	1	1	1					
	12010121	CONTRATUERCA (GAES)790.1300.(	COUNTERNUT (GAES) 790.1300.0	1	1	1	1	1	1					
	12010046	JUNTA GOMA (GAES)	RUBBER BOARD (GAES)	1	1	1	1	1	1					
16	12041634	CONJUN.TERMOPAR VAPOR Ø4-06	STEAM THERMOCOUPLE UNIT Ø4	1	1	_	1	1	_					
16	12044609	CONJUNTO TERMOPAR L425	THERMOCOUPLE UNIT L425	_	_	1	_	_	1					
17	12041049	RACORD CIERRE SONDA Ø 4	PROBE CLOSING ADAPTOR Ø 4	1	1	1	1	1	1					
S/Nº	12043409	BICONO CIERRE SONDA Ø4	PROBE CLOSING BICONE Ø4	1	1	1	1	1	1					
18	12025135	CONDENSADOR 3 µF	CONDENSER 3 µF	_	_	1	_	_	1					
19	12024173	TRANSFORMADOR 12-0-12-0,24-0	TRANSFORMER 12-0-12-0,24-0	1	1	1	1	1	1					

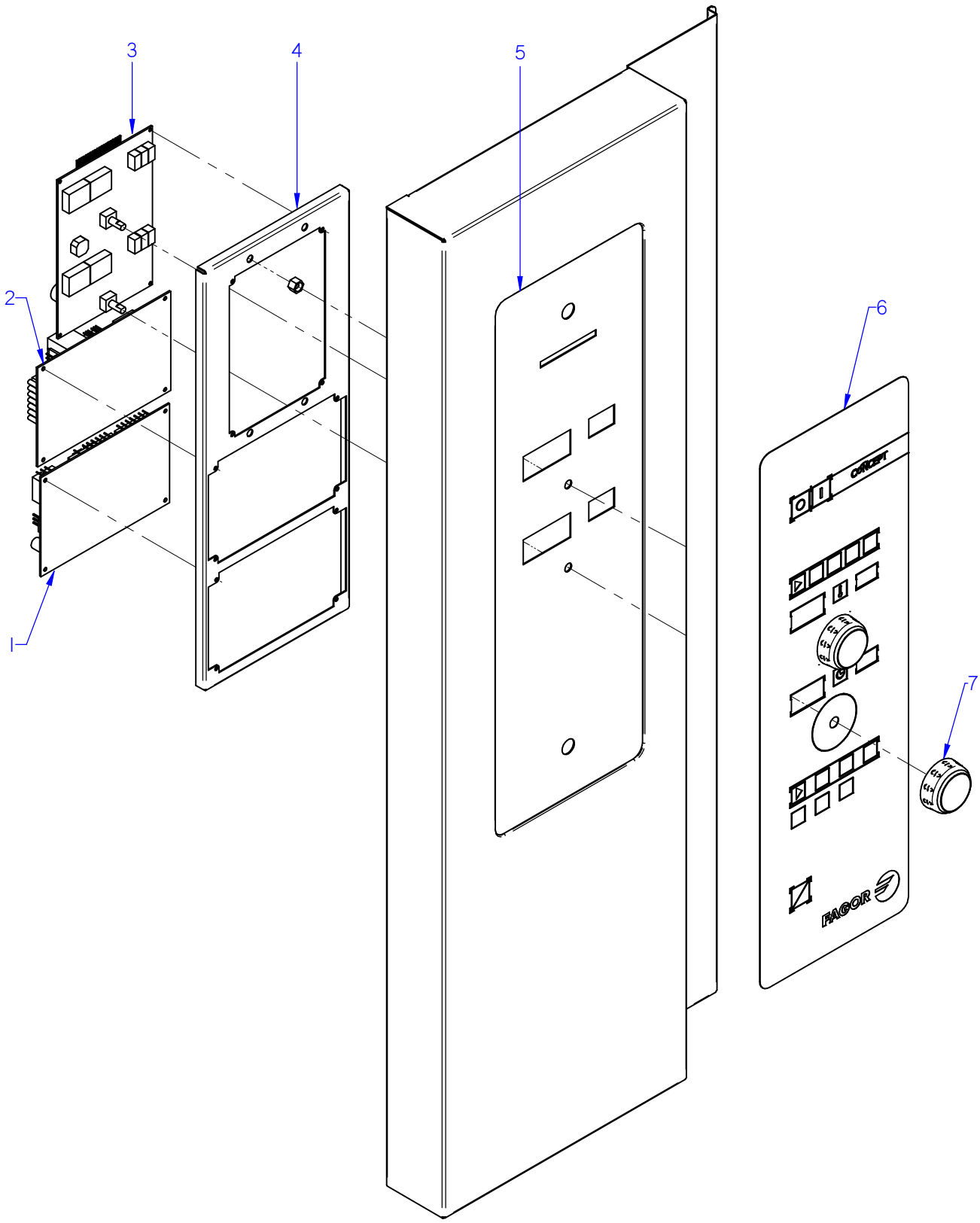

ITEM MARCADO EN COLOR = REPUESTO RECOMENDADO
COLOURED ITEM = RECOMMENDED SPARE PART

Nº plano / N º plane	Firma	Fecha / Date	Denominación / Denomination: PORTAMANDOS / CONTROL HOLDER	Lamina / Sheet	
C-3056		2012-09	HORNOS ACG-061 / 101	11	Fagor Industrial S.Coop. FAGOR Oñate

MOD.	HORNOS / OVEN	ZONA / ZONE	CONJUNTO ELECTRICO PORTAMANDOS / CONTROL HOLDER ELECTRIC UNIT	PLANO DIAGRAM	C-3056

ITEM	CODIGO REFERENCE	DENOMINACION	DENOMINATION	ACG-061	ACG-101							ELIMINADO ELIMINATED	INTRODUCID. INTRODUCED	NOTAS
1	12046673	CONTROL TARJETA GAS	GAS CONTROL BOARD	1	1									
2	12046659	CONTROL TARJETA CAM.12V AC .	CARD CONTROL 12V AC 50/60Hz	1	1									
3	12046671	VISUALIZADOR 12V AC 50/60Hz 12D	12V AC 50/60Hz 12D DISPLAY	1	1									
4	12043668	SOPORTE PROGRA. CONCEPT ADV.	CIRCUIT SUPPORT CONCEPT AD	1	1									
5	12093219	FRENTE PORTAM. CONCEPT	CONTROL PANEL FRONT CONC.	1	1								16.09.13	
S/Nº	12041815	JUNTA PORTAMANDOS ADV PLUS	CONTROL PANEL SEAL ADV PLUS	1	1								16.09.13	
6	12044176	SERIGRAFIA ADV CONCEPT GAS	SERIGRAPHY ADV CONCEPT G	1	1									
7	12046201	BOTON CONCEPT ADV	CONTROL BUTTON CONC. ADV	2	2									

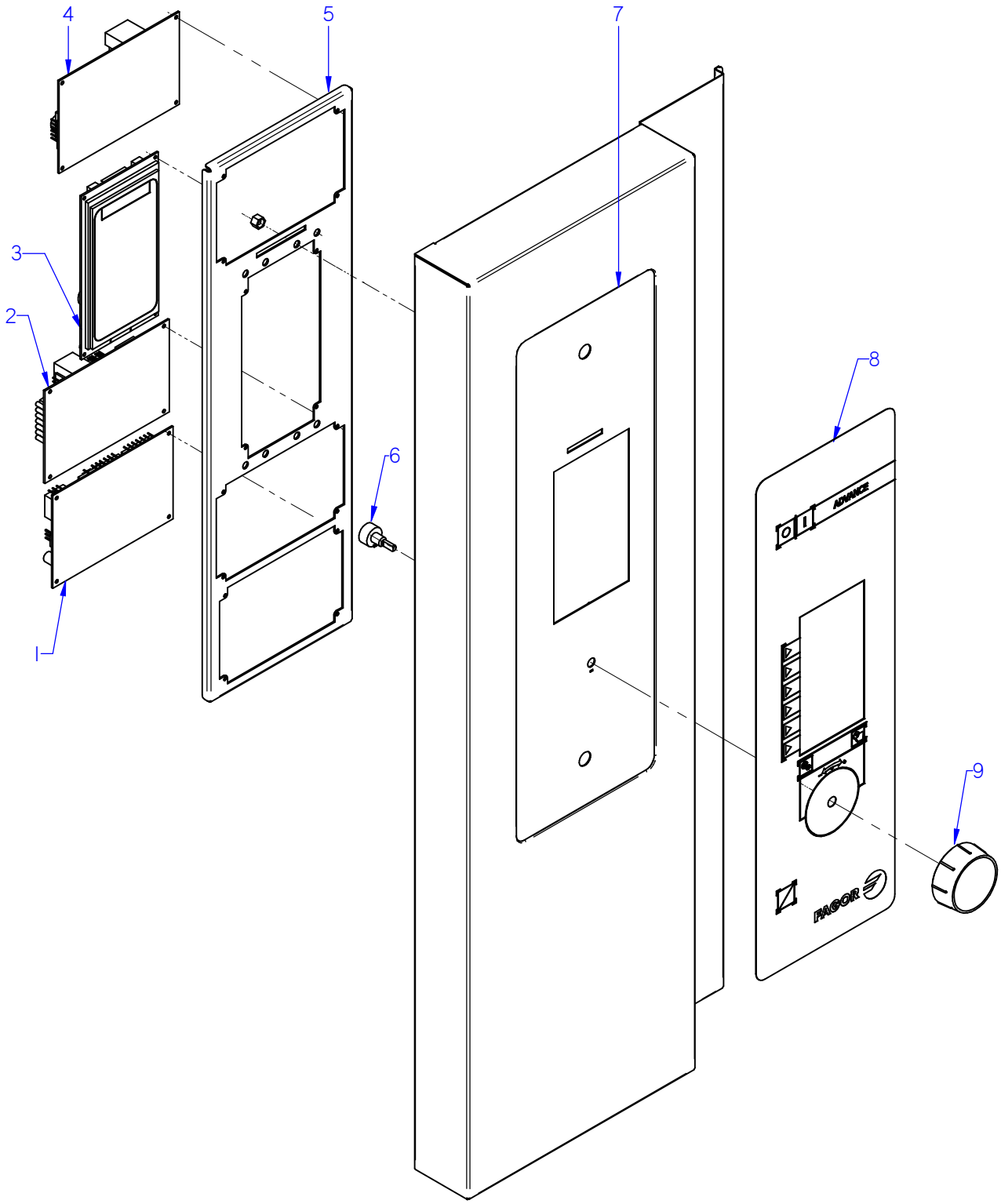

ITEM MARCADO EN COLOR = REPUESTO RECOMENDADO
COLOURED ITEM = RECOMMENDED SPARE PART

Nº plano / N º plane	Firma	Fecha / Date	Denominación / Denomination: PORTAMANDOS / CONTROL HOLDER	Lamina / Sheet	
C-3057		2012-09	HORNOS AG-061 / 101	12	Fagor Industrial S.Coop. FAGOR Oñate

MOD.	HORNOS / OVEN	ZONA / ZONE	CONJUNTO ELECTRICO PORTAMANDOS / CONTROL HOLDER ELECTRIC UNIT	PLANO DIAGRAM	C-3057

ITEM	CODIGO REFERENCE	DENOMINACION	DENOMINATION	AG-061	AG-101							ELIMINADO ELIMINATED	INTRODUCID. INTRODUCED	NOTAS
1	12046673	CONTROL TARJETA GAS	GAS CONTROL BOARD	1	1									
2	12046659	CONTROL TARJETA CAM.12V AC .	CARD CONTROL 12V AC 50/60Hz	1	1									
3	12046672	VISUALIZADOR 12V AC 50/60Hz 32	12V AC 50/60Hz 32 D DISPLAY	1	1									
4	12046670	CONTROL TARJETA CALD. 12V AC	CARD CONTROL 12V AC 50/60Hz	1	1									
5	12039536	SOPORTE CIRCUITOS ADVANCE	CIRCUIT SUPPORT ADVANCE	1	1									
	12009944	ARANDELA A5	FLAT WASHER A.5	4	4									
	12010281	TUERCA EXAGONAL AUT M5 H. ZI.	HEXAGONAL NUT M5 H. ZINC,	4	4									
6	12043405	ENCODER GAMA ADVANCE	ADVANCE RANGE ENCODER	1	1									
7	12093236	FRENTE PORTAM. AE-AG COMP.	CONTROL PANEL FRONT AE-AG	1	1								16.09.13	
S/Nº	12041815	JUNTA PORTAMANDOS ADV PLUS	CONTROL PANEL SEAL ADV PLU	1	1								16.09.13	
8	12044139	SERIGRAFIA ADVANCE	ADVANCE SERIGRAPHY	1	1									
9	12044074	BOTON DE MANDO ADV	ADV CONTROL BUTTON	1	1									

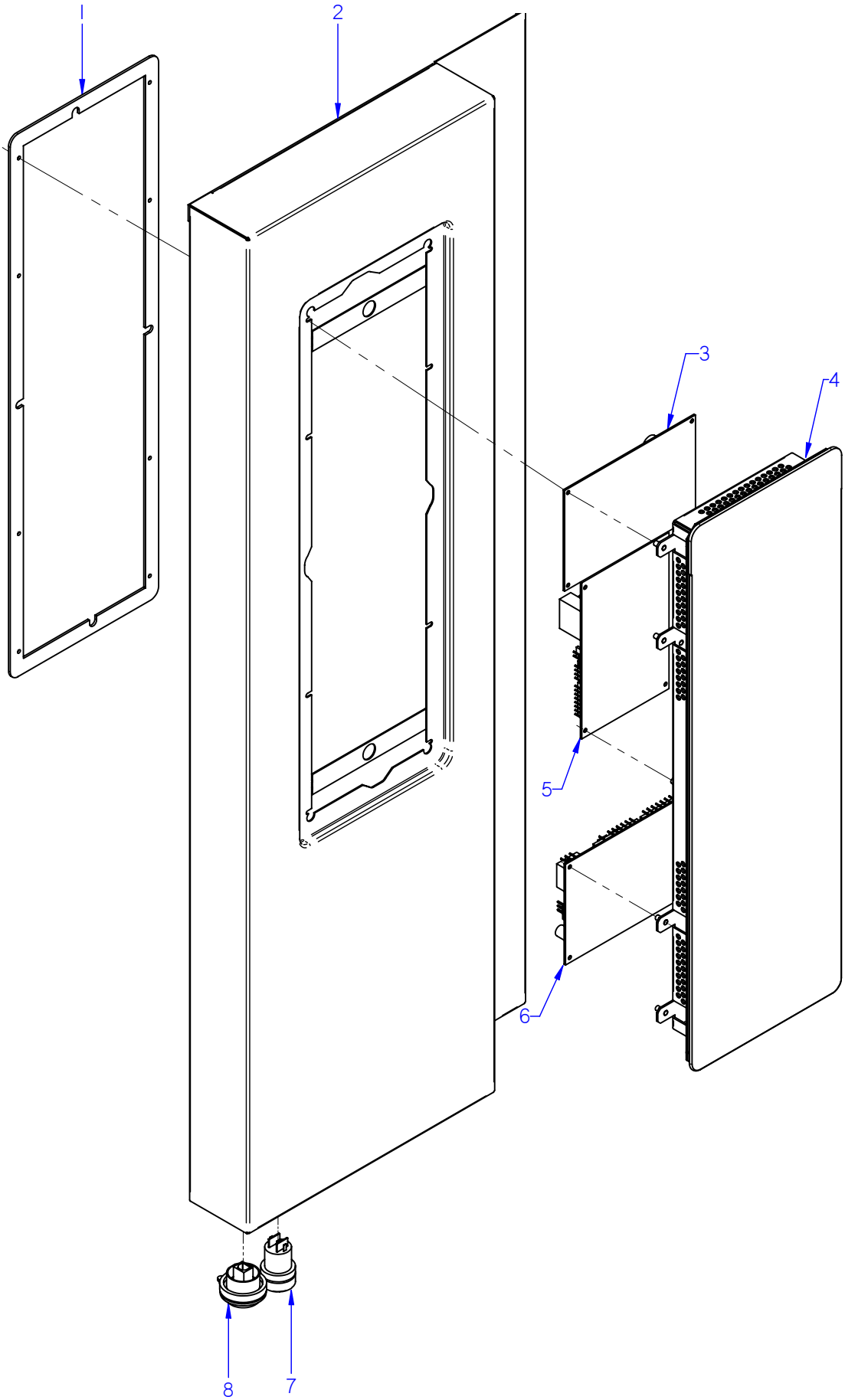

ITEM MARCADO EN COLOR = REPUESTO RECOMENDADO
COLOURED ITEM = RECOMMENDED SPARE PART

Nº plano / N º plane	Firma	Fecha / Date	Denominación / Denomination: PORTAMANDOS / CONTROL HOLDER	Lamina / Sheet	
C-3058		2012-09	HORNOS APG-061 / 101	13	Fagor Industrial S.Coop. FAGOR Oñate

MOD.	HORNOS / OVEN	ZONA / ZONE	CONJUNTO ELECTRICO PORTAMANDOS / CONTROL HOLDER ELECTRIC UNIT	PLANO DIAGRAM	C-3058

ITEM	CODIGO REFERENCE	DENOMINACION	DENOMINATION	APG-061	APG-101							ELIMINADO ELIMINATED	INTRODUCID. INTRODUCED	NOTAS
1	12041815	JUNTA PORTAMANDOS ADV PLUS	CONTROL PANEL SEAL ADV PLUS	1	1									
	12010289	TUERCA AUTOB. M3 DIN985	SELF-LOCK NUT M3 DIN985	6	6									
	12010288	CLIP SUJECIÓN RÁPIDA Ø 4	RAPID CONNECT CLIP Ø 4	12	12									
2	12039625	PORTAMANDOS APE 061	CONTROL PANEL APE 061	1	_									
2	12043767	PORTAMANDOS APE-APG 101	CONTROL PANEL APE-APG 101	_	1									
3	12046670	CONTROL TARJETA CALD. 12V AC 50/6	CARD CONTROL 12V AC 50/60Hz	1	1									
4	12046579	PLAT ADV PLUS CON SOFTWARE	ADV PLUS SOFTWARE PLATF.	1	1							25.05.15		
4	12121349	PLAT ADV PLUS CON SOFTWARE	ADV PLUS SOFTWARE PLATF.	1	1								25.05.15	
5	12046659	CONTROL TARJETA CAM.12V AC .	CARD CONTROL 12V AC 50/60Hz	1	1									
6	12046673	CONTROL TARJETA GAS	GAS CONTROL BOARD	1	1									
7	12023927	PULSADOR SERIE MICRO	MICRO SWITCH SERIES	1	1									
8	12024064	CONECTOR USB VISUAL PLUS	VISUAL PLUS USB CONNECTOR	1	1									
S/Nº	12023647	TAPA USB VISUAL PLUS	VISUAL PLUS USB COVER	1	1									

MOD.	HORNOS / OVEN	ZONA / ZONE	VARIOS / MISCELLANEOUS	PLANO DIAGRAM	

ITEM	CODIGO REFERENCE	DENOMINACION	DENOMINATION	ACG-061	AG-061	APG-061	ACG-101	AG-101	APG-101			ELIMINADO ELIMINATED	INTRODUCID. INTRODUCED	NOTAS
	12045296	MANUAL DE USUARIO ADV CONCE	USER MANUAL ADV CONCEPT	1	_	_	1	_	_					
	12044972	MANUAL INSTAL. CONCEPT GAS	INSTALLATI. MANUA CONC. GAS	1	_	_	1	_	_					
	12045298	MANUAL DE USUARIO ADVANCE	USER MANUAL ADVANCE	_	1	_	_	1	_					
	12044973	MANUAL NSTALACION ADV GAS	INSTALLATI. MANUAL ADV GAS	_	1	_	_	1	_					
	12045299	MANUAL DE USUARIO ADV PLUS	USER MANUAL ADV PLUS	_	_	1	_	_	1					
	12044974	MANUAL INSTAL. ADV PLUS GAS	INST. MANUAL ADV PLUS GAS	_	_	1	_	_	1					
	12039676	ESQUE. TEORICO ACG, AG, APG	THEO. DIAGRAM ACG, AG, APG	1	1	1	1	1	1					
	12039293	PLANO MONTAJE ACG, AG, APG	ASSEMBLY PLAN ACG, AG, APG	1	1	1	1	1	1					
	12044401	INSTAL. ELECT. ACG, 061,101,102	ELEC. INSTALL. ACG, 061,101,102	1	_	_	1	_	_					
	12039537	INSTAL. ELECT. APG,061,101,102	ELEC. INSTAL. APG,061,101,102	_	1	1	_	1	1					
	12024453	CABL. DETEC-LLAMA-CAM. 20-21	FLAME DETECT. CAMERA WIR. 2	1	1	1	1	1	1					
	12024399	CABL. DETEC-LLAMA-CAM. 10-21	FLAME DETECT. CAMERA WIR. 2	1	1	1	1	1	1					
	12008032	CABLEADO TIERRA CG9-41	EARTH WIRING CG9-41	1	1	1	1	1	1					
	12024569	CABLEADO LUZ INTERIOR HVG10-	INTERIOR LIGHT WIRING HVG10-	1	1	1	1	1	1					
	12023696	CABLEADO BMF	WIRING BMF	1	1	1	1	1	1					
	12039456	CABL. ADAPTADOR SOPLANTE	BLOWER ADAPTER WIRING	_	_	_	1	1	1					
	12024655	CABLEADO VAR-SOPL HGV20-21	BLOWER DRIVE WIR. HGV20-21	1	1	1	1	1	1					
	12008929	CABLEADO VAR-SOPL HGC-20-21	BLOWER DRIVE WIR. HGC-20-21	_	1	1	1	1	1					
	12040567	CABLEADO LAVADO 201-102-202	WIRING CABLE 201-102-202	_	_	1	_	_	1					
	12009059	CABLEADO LAVADO 06,101	WIRING CABLE 06,101	_	_	1	_	_	1					
	12008976	CABLEADO PULSADOR RESET	RESET BUTTON WIRING	_	_	1	_	_	1					
	12023775	CABLE USB VISUAL PLUS 1,5M	VISUAL PLUS USB CABLE 1,5M	_	_	1	_	_	1					
	12009257	CABLE. TRANSFORMADOR TFT UL	TRANSFORMER WIRING TFT UL	_	_	1	_	_	1					
	12009277	CD HACCP VISUAL COMPLETO	HACCP CD COMPLETE VISUAL	_	_	1	_	_	1					
	12022177	LEYENDA HORNOS	LEGEND OVENS	1	1	1	1	1	1					

MOD.	HORNOS / OVEN	ZONA / ZONE	REPUESTOS RECOMENDADOS RECOMMENDED SPARE PART	PLANO DIAGRAM	

ITEM	CODIGO REFERENCE	DENOMINACION	DENOMINATION	ACG-061	AG-061	APG-061	ACG-101	AG-101	APG-101			ELIMINADO ELIMINATED	INTRODUCID. INTRODUCED	NOTAS
16	**12046015**	**KIT PUERTA 061**	**DOOR 061 KIT**	**1**	**1**	**1**	_	_	_					C-3047
16	**12046018**	**KIT PUERTA 101**	**DOOR 101 KIT**	_	_	_	**1**	**1**	**1**					C-3047
1	**12046041**	**KIT CRISTAL INTER. 061**	**061 INNER GLASS KIT**	**1**	**1**	**1**	_	_	_					C-3047
1	**12046042**	**KIT CRISTAL INTER. 101**	**101 INNER GLASS KIT**	_	_	_	**1**	**1**	**1**					C-3047
7	12039311	BASE BISAGRA INFERIOR PUERTA	LOWER DOOR HINGE BASE	1	1	1	1	1	1			02.09.13		C-3047
7	12047967	BASE BISAGRA INFERIOR 6 DIEN	LOWER HINGE BASE	1	1	1	1	1	1				02.09.13	C-3047
8	12047580	REP. MANILLA 1/1 ADVANCE	HANDLE 1/1 ADVANCE	1	1	1	1	1	1					C-3047
9	12024560	INTERRUPTOR MAGNETICO AC	MAGNETIC SWITCH AC	1	1	1	1	1	1					C-3047
14	12023849	ANCLAJE PUERTA	DOOR ANCHORING	1	1	1	1	1	1					C-3047
15	12039599	JUNTA PUERTA COMPL. 061	DOOR JOINT 061	1	1	1	_	_	_					C-3047
15	12039475	JUNTA PUERTA COMPL. 101	DOOR JOINT 101	_	_	_	1	1	1					C-3047
12	12040977	DUCHA	SHOWER	_	1	1	_	1	1					C-3048
19	12025161	ELECTROVALV. 230VAC 50/60Hz 1V	SOLENOID VALVE 230VAC 1 V	_	1	1	_	1	1					C-3048
1	12024325	MOTOR 230VAC3N650KW1450RPM	MOTOR 230V AC 3N650KW 1450	1	1	1	1	1	1					C-3049
4	12024510	RETEN 17X28X7V	RETAINER 28x17x7	2	2	2	2	2	2					C-3049
5	12010122	ANILLO DE SEGURIDAD Ø 28X1.2	SAFETY RING 28x1,2	1	1	1	1	1	1					C-3049
11	12025193	INTERRUPTOR PUERTA	DOOR SWITCH	2	2	2	2	2	2					C-3050
12	12024638	MOTOR CHIMENEA	FLUEPIPE MOTOR	1	1	1	1	1	1					C-3050
14	12024122	TUBO FLEXIBLE Ø53X360	FLEXIBLE TUBE Ø53X360	1	1	1	1	1	1					C-3050
1	12025161	ELECTROVALV. 230VAC 50/60Hz 1V	SOLENOID VALVE 230VAC 1 V	1	_	_	1	_	_					C-3051
1	12115418	ELECTR. 230V AC 50/60Hz 3 VIAS A	SOLENOID 230V AC 50/60Hz 3 V	_	1	1	_	1	1					C-3051
8	12039546	MOTOBOMBA 230V AC 1N 50/60Hz	PUMP 230V AC 50/60Hz 30W 1N	_	1	1	_	1	1					C-3051
10A	**12093684**	**KIT VALVULA DESAGUE ADVAN.**	**VALVE DRAIN ADVANCE KIT**	_	_	**1**	_	_	**1**					C-3051
20	12024708	MOTOBOMBA ACLARADO	MOTOR-PUMP	_	_	1	_	_	1					C-3051
21	12047404	MOD CONJUNTO DESAGUE ADV	ADV DRAIN SET MODEL	1	1	1	1	1	1				03,12,12	C-3051
1	**12046069**	**KIT GENERADOR VAPOR 601**	**STEAM GENERATOR 601 KIT**	_	_	**1**	**1**	_	_					C-3052
1	**12046099**	**KIT GENERADOR VAPOR 101**	**STEAM GENERATOR 101 KIT**	_	_	_	_	**1**	**1**					C-3052
2	12023573	ELECTRODO ALTO	HIGH LEVEL ELECTRODE	_	_	1	1	1	1					C-3052
3	12023574	ELECTRODO BAJO	LOW LEVEL ELECTRODE	_	_	1	1	1	1					C-3052
4	12023575	ELECTRODO DE MASA	EARTH ELECTRODE	_	_	1	1	1	1					C-3052
7	12039546	MOTOBOMBA 230V AC 1N 50/60Hz	PUMP 230V AC 50/60Hz 30W 1N	_	_	1	1	1	1					C-3052

MOD.	HORNOS / OVEN	ZONA / ZONE	REPUESTOS RECOMENDADOS RECOMMENDED SPARE PART	PLANO DIAGRAM	

ITEM	CODIGO REFERENCE	DENOMINACION	DENOMINATION	ACG-061	AG-061	APG-061	ACG-101	AG-101	APG-101			ELIMINADO ELIMINATED	INTRODUCID. INTRODUCED	NOTAS
8	12023921	ELECTR. 230V AC 50/60Hz 3 VIAS A	SOLENOID 230V AC 50/60Hz 3 V	_	_	1	1	1	1					C-3052
10	12039649	TUBO DESAGÜE GENERADOR	DRAIN TUBE GENERATOR	_	_	1	1	1	1					C-3052
12	12047940	EMPALME GENERADOR AG 061	GENERATOR JOINT AG 061	_	_	1	1	_	_					C-3052
12	12048044	EMPALME GENERADOR AG 101	GENERATOR JOINT AG 101	_	_	_	_	1	1					C-3052
S/Nº	12047901	EMPALME SILICONA Ø53	SILICONE JOINT Ø53	_	_	2	2	2	2					C-3052
13	12023901	CONJUN. TERMOPAR VAPOR	STEAM THERMOCOUPLE UNIT	_	_	1	1	1	1					C-3052
2	12044607	SOPLANTE NRG 118 55kw	BLOWER NRG 118 55kw	_	_	1	1	1	1					C-3053
7	12115418	CAJA CONTROL DBC 579	DBC CONTROL BOX 579	_	_	1	1	1	1					C-3053
8	12046364	VALVULA REGUL 50HZ ADV	ADV 50HZ VALVE CONTROLL.	_	_	1	1	1	1					C-3053
8	12046365	VALVULA REGUL 60HZ ADV	ADV 60HZ VALVE CONTROLL.	_	_	1	1	1	1					C-3053
14	12039585	ELECTRODO IGNICION GEN 061	IGNITION ELECTRODEGEN 061	_	_	1	1	1	1					C-3053
15	12039586	ELECTRODO DETECCI. 6/101/102	DETECTION ELECTRODE 6/101/102	_	_	1	1	1	1					C-3053
16	12039544	CHISPA BRAHMA	BRAHMA SPARK	_	_	1	1	1	1					C-3053
17	12039583	QUEMADOR GENERADOR 06/101	BURNER GENERATOR 06/101	_	_	1	1	1	1					C-3053
5	12039684	BUJIA CONVECCION 061	SPARK CONVECTION 061	1	1	1	1	1	1					C-3054
9	12039440	CAJA CONTROL DBC 579	DBC CONTROL BOX 579	1	1	1	1	1	1					C-3054
10	12046364	VALVULA REGUL 50HZ ADV	ADV 50HZ VALVE CONTROLL.	1	1	1	1	1	1					C-3054
10	12046365	VALVULA REGUL 60HZ ADV	ADV 60HZ VALVE CONTROLL.	1	1	1	1	1	1					C-3054
15	12044607	SOPLANTE NRG 118 55kw	BLOWER NRG 118 55kw	1	1	1	1	1	1					C-3054
18	12044447	TUBO DESAGUE ADV 01	DRAIN PIPE ADV 01	1	1	1	1	1	1					C-3054
19	12039544	CHISPA BRAHMA	BRAHMA SPARK	1	1	1	1	1	1					C-3054
21	12039680	QUEMADOR CONVECCION 061	BURNER CONVECTION 061	1	1	1	_	_	_					C-3054
21	12039556	QUEMADOR CONVECCION 101	BURNER CONVECTION 101	_	_	_	1	1	1					C-3054
22	12039685	DETECTOR CONVECCION 061	CONVECTION DETECTOR 061	1	1	1	1	1	1					C-3054
1	12048798	REP VARIADOR REGULADO ADV	REGULATED VARIATOR ADV	1	1	1	1	1	1					C-3055
2	12024642	CONJUN. TERMOPAR CAMARA (K)	CHAMBER THERMOCOUPLE UNIT (K)	1	1	1	1	1	1					C-3055
6	12039548	SONDA PINCHO ADVANCE	ADVANCE PROBE PINCHO	1	1	1	1	1	1					C-3055
9	12024591	TERMOSTATO LIMITADOR 10/21	LIMITER THERMOSTAT10/21	1	1	1	1	1	1					C-3055
10	12024884	TERMOSTATO LIMITADOR CORTE	THERMOSTAT LIMITER	_	1	1	_	1	1					C-3055
13	12049846	VENTILADOR 230V.50-60HZ 53W	FAN 230V 50/60HZ 53W	2	2	2	2	2	2					C-3055

MOD.	HORNOS / OVEN	ZONA / ZONE	REPUESTOS RECOMENDADOS RECOMMENDED SPARE PART	PLANO DIAGRAM	

ITEM	CODIGO REFERENCE	DENOMINACION	DENOMINATION	ACG-061	AG-061	APG-061	ACG-101	AG-101	APG-101			ELIMINADO ELIMINATED	INTRODUCID. INTRODUCED	NOTAS
16	12041634	CONJUN.TERMOPAR VAPOR Ø4-061	STEAM THERMOCOUPLE UNIT Ø4-06	1	1	_	1	1	_					C-3055
16	12044609	CONJUNTO TERMOPAR L425	THERMOCOUPLE UNIT L425	_	_	1	_	_	1					C-3055
17	12041049	RACORD CIERRE SONDA Ø 4	PROBE CLOSING ADAPTOR Ø 4	1	1	1	1	1	1					C-3055
18	12025135	CONDENSADOR 3 µF	CONDENSER 3 µF	_	_	1	_	_	1					C-3055
19	12024173	TRANSFORMADOR 12-0-12-0,24-0	TRANSFORMER 12-0-12-0,24-0	1	1	1	1	1	1					C-3055
1	12046673	CONTROL TARJETA GAS	GAS CONTROL BOARD	1	_	_	1	_	_					C-3056
2	12046659	CONTROL TARJETA CAM.12V AC .	CARD CONTROL 12V AC 50/60Hz	1	_	_	1	_	_					C-3056
3	12046671	VISUALIZADOR 12V AC 50/60Hz 12D	12V AC 50/60Hz 12D DISPLAY	1	_	_	1	_	_					C-3056
6	12044176	SERIGRAFIA ADV CONCEPT GAS	SERIGRAPHY ADV CONCEPT G	1	_	_	1	_	_					C-3056
1	12046673	CONTROL TARJETA GAS	GAS CONTROL BOARD	_	1	_	_	1	_					C-3057
2	12046659	CONTROL TARJETA CAM.12V AC .	CARD CONTROL 12V AC 50/60Hz	_	1	_	_	1	_					C-3057
3	12046672	VISUALIZADOR 12V AC 50/60Hz 32 D	12V AC 50/60Hz 32 D DISPLAY	_	1	_	_	1	_					C-3057
4	12046670	CONTROL TARJETA CALD. 12V AC 50/6	CARD CONTROL 12V AC 50/60Hz	_	1	_	_	1	_					C-3057
6	12043405	ENCODER GAMA ADVANCE	ADVANCE RANGE ENCODER	_	1	_	_	1	_					C-3057
8	12044139	SERIGRAFIA ADVANCE	ADVANCE SERIGRAPHY	_	1	_	_	1	_					C-3057
1	12041815	JUNTA PORTAMANDOS ADV PLUS	CONTROL PANEL SEAL ADV PLUS	_	_	1	_	_	1					C-3058
3	12046670	CONTROL TARJETA CALD. 12V AC 50/6	CARD CONTROL 12V AC 50/60Hz	_	_	1	_	_	1					C-3058
4	12121349	PLAT ADV PLUS CON SOFTWARE	ADV PLUS SOFTWARE PLATF.	_	_	1	_	_	1					C-3058
5	12046659	CONTROL TARJETA CAM.12V AC .	CARD CONTROL 12V AC 50/60Hz	_	_	1	_	_	1					C-3058
6	12046673	CONTROL TARJETA GAS	GAS CONTROL BOARD	_	_	1	_	_	1					C-3058
7	12023927	PULSADOR SERIE MICRO	MICRO SWITCH SERIES	_	_	1	_	_	1					C-3058
8	12024064	CONECTOR USB VISUAL PLUS	VISUAL PLUS USB CONNECTOR	_	_	1	_	_	1					C-3058
S/Nº	12023647	TAPA USB VISUAL PLUS	VISUAL PLUS USB COVER	_	_	1	_	_	1					C-3058

SIT

APG 06 1, APG 10 1, APG 20 1,
APG 10 2, APG 20 2

AG 06 1, AG 10 1, AG 20 1,
AG 10 2, AG 20 2

ACG 06 1, ACG 10 1, ACG 20 1,
ACG 10 2, ACG 20 2

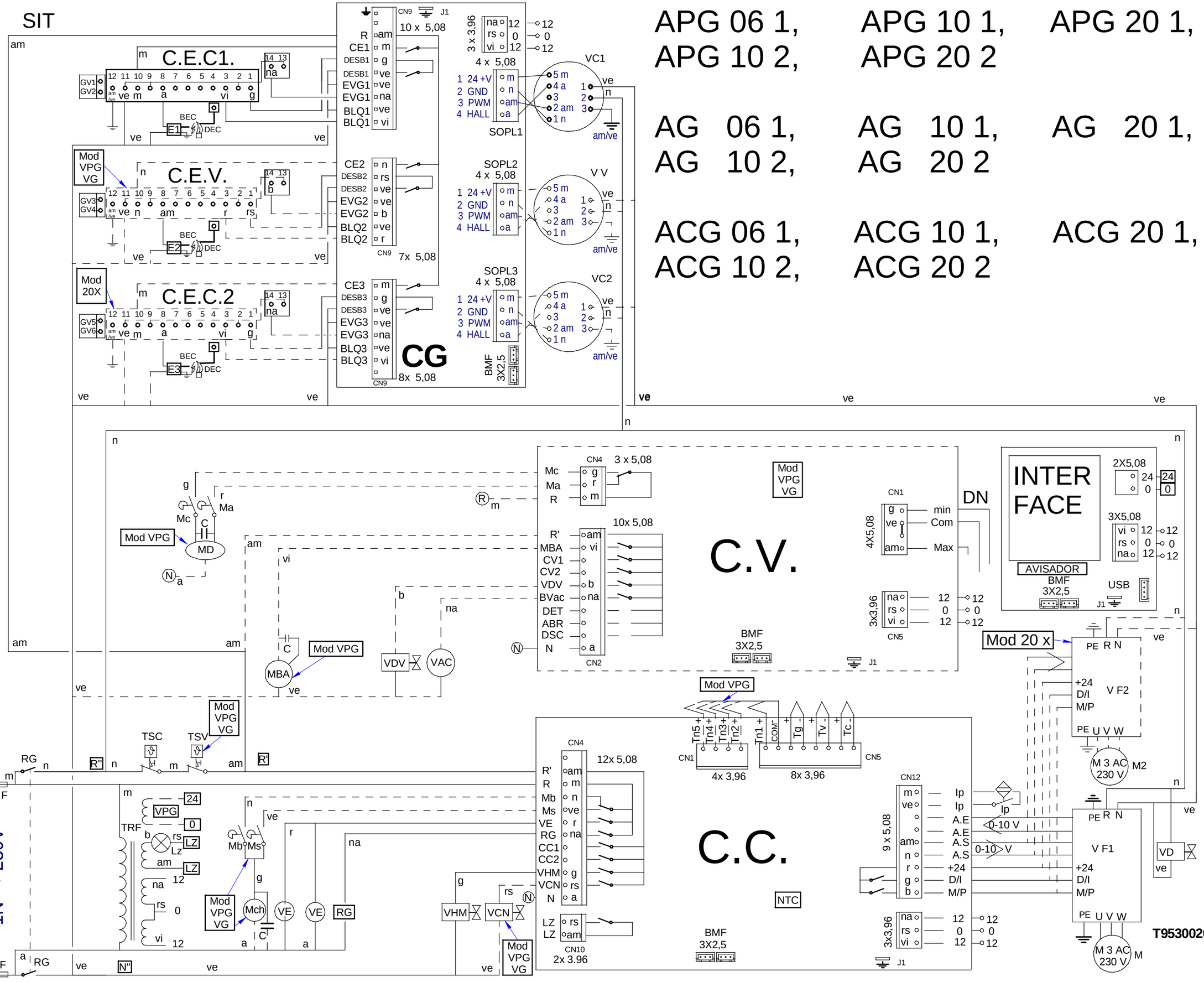

Variador de Siemens.
Pulsar [P] paraentrar o salir de los Parmetros.
Nota. Si se modifica algunvalor del nivel Basico, hay que volver a grabar el nivel 3.

P0010 = 1 Para inicio programación. (Nivel Basico)
P0100 = 0 (Valor en KW 50Hz Europa)
P0304 = 230 (Vn V)
P0305 = 1,8 (Inb A)
P0307 = 0,37 (Pn KW)
P0310 = 50 (Fn Hz)
P0311 = 1400 (rpm Nom)
P0700 = 2 (Terminal)
P1000 = 2 (Consigna ADC)
P1080 = 25 (F.min Hz)
P1082 = 50 (F.Max Hz)
P1120 = 5" (Ton ")
P1121 = 5" (Toff ")
P3900 = 1 (Fin de la programación y grabación de datos.)
P0003 =3 (Nivel 3 Experto).
P0005 = 27 (Visualizacion = Corriente de salida)
P0611 = 16000 (Tiempo de activación de sobrecarga Seg.)
P0640 = 150 (Sobrecarga de corriente en %)
P1210 = 6 (Rearranque automático)
P1300 = 2 (Modo Parábola, Ventilador)
P1800 = 16 (F.Base KHz) (Cuanto mas alto: - ruido acústico)
P2000 = 50 (F.Refencia de la consigna Hz)

COPIAR PARAMETROS DESDE EL BOP AL VARIADOR

P0003 = 3
P0010= 30
P0803 = 1

SOLO USAR CUANDO EL BOP SE HA BORRADO

P0802 desde Variador a BOP

		10 2	20 2
		VG	VPG	VG
Genrl	1	T643007000	
Soplt	2	T303058	T493011
Ig.C	3	T303034	T493012
Dll.C	4	T303035	T493013
Ig.V	5	T303036000	
Dll.V	6	T303037	T493014
BMF	7	T903006000	
VF2	8		T743002
Proln	9	----------	
Lz	10	T303031	T493010
Lav	11	T333009	
Rst	12	T523004	
TFT	13	T853003	
USB	14	T723008	
Esquema	-	T643005000	
Leyenda	-	T303042000	
Ind.Comp	-	T303043000	

-	Plano Montaje HGV-HGP 380V	-	-	T953003000	-
Zk./Nº	Pieza	Cant.	Materiala/Material	Klas. zk/Nº Clas.	Gainazal akabera/Tratamiento
Zk./Nº	Aldaketa/Modificaciones		Nork proposatua/Propuesta de	Data/Fecha	Perdoi orokorrak Tolerancias generales
1	Modificar distanciade las canaletas de 150 a175 mm.		jeskibel	2007-07-05	< 5 ± 0.2 / 50 ÷ 100 ± 0.8
-	-		-	-	5 ÷ 25 ± 0.4 / >100± 1
-	-		-	-	25 ÷ 50 ± 0.6 / α ± 1
-	-		-	-	
-	-		-	-	

	Sinadura/Firma	Data/Fecha
Marraztua/Dibujado	M.Maillo	2011-07-05
Proiektatua/Proyectado	M.Maillo	2011-07-05
Egiaztatua/Comprobado	LIBURETAGOIENA	2011-07-05
Eskala/Escala	-	

FAGOR
Fagor Industrial,Koop.Elk, Mugatua

HORNOS

Plano hau ezin daiteke erabili, ez berriztatu, gure baimenik gabe.

Gainazal perdoia Mecanizado superficial —

Plano Zk./Plano Nº HD -13183

- Zk. ord. du
- Zk.gaitik ord.

	ESPAÑOL	FRANÇAIS	ENGLISH	DEUTSCH	ITALIANO
BEC	Bujía Encendido Cámara	Bougie Allumage Chambre	Chamber Spark Plug	Zündkerze Einschalten Garraum	Candela di Accensione Camera
BEV	Bujía Encendido Caldera	Bougie Allumage Chaudière	Boiler Spark Plug	Zündkerze Einschalten Boile	Candela di Accensione Caldaia
C.C.	Control Camara	Contrôle Chambre	Chamber Control	Steuerung Garraum	Controllo Camera
C.E.C	Control Combustión Cámara	Contrôle Combustion Chambre	Chamber Combustion Control	Steuerung Verbrennung Garraum	Controllo Combustione Camera
C.E.V	Control Combustión Caldera	Contrôle Combustion Chaudière	Boiler Combustion Control	Steuerung Verbrennung Boiler	Controllo Combustione Caldaia
C.G.	Control Gas	Contrôle Gaz	Control Gas	Steuern Sie Gas	Controlli il gas
C.V.	Control Caldera	Contrôle Chaudière	Boiler Control	Steuerung Boiler	Controllo Caldaia
CC1, CC2	Contactor Resistencia Cámara	Contacteur Élément Chauffant Chambre	Chamber Heating Element Contactor	Schütz Heizwiderstand Garraum	Contattore Resistenza Camera
CK1, CK2	Contactor General Calentamiento	Relais Élément Chauffant	Heating Element Relay	Relais Heizwiderstand	Relè Resistenza
CV1, CV2	Contactor Resistencias Caldera	Contacteur Élément Chauffant Chaudière	Boiler Heating Element Contactor	Schütz Heizwiderstand Boiler	Contattore Resistenza Caldaia
DEC	Detector Llama Cámara	Détecteur Flamme Chambre	Chamber Flame Detector	Flammendetektor Garraum	Rilevatore di Fiamma Camera
DEV	Detector Llama Caldera	Détecteur Flamme Chaudière	Boiler Flame Detector	Flammendetektor Boiler	Rilevatore di Fiamma Caldaia
DN	Detector Nivel Caldera	Détecteur Niveau Chaudière	Boiler Level Detector	Pegeldetektor Boiler	Rilevatore Livello Caldaia
F	Fusibles	Fusibles	Fuses	Sicherungen	Fusibili
FI	Filtro Interferencias	Filtre Interférences	Interference Filter	Störungsfilter	Filtro Interferenze
FM	Térmico Motor	Thermique Moteur	Thermal Engine	Thermoschalter Motor	Termico Motore
GV1, GV2	Electro válvula Gas Cámara	Électrovanne Gaz Chambre	Chamber Gas Solenoid Valve	Elektroventil Gas Garraum	Elettrovalvola Gas Camera
GV3, GV4	Electro válvula Gas Caldera	Électrovanne Gaz Chaudière	Boiler Gas Solenoid Valve	Elektroventil Gas Boiler	Elettrovalvola Gas Caldaia
Ip	Interruptor Seguridad Puerta	Interrupteur Sécurité Porte	Door Safety Switch	Sicherheitsschalter Tür	Iterruttore Sicurezza Porta
Lz	Luz Interior	Éclairage Intérieur	Inner Light	Innenbeleuchtung	Luce Interna
M, M2	Motor Turbina	Moteur Turbine	Turbine Engine	Motor Turbine	Motore Turbina
Ma	Interruptor Micro Abierto	Microrupteur Ouvert	Open Microswitch	Mikroschalter Geöffnet	Iterruttore Micro Aperto
Mb	Interruptor Micro Bajada	Microrupteur Descente	Drop Microswitch	Mikroschalter Senken	Iterruttore Micro Discesa
Mc	Interruptor Micro Cerrado	Microrupteur Fermé	Closed Microswitch	Mikroschalter Geschlossen	Iterruttore Micro Chiuso
Mch	Motor Chimenea	Moteur Cheminée	Stack Engine	Motor Abluftkamin	Motore Canna
MD	Motor Desague	Moteur évacuation	Drain Engine	Motor Abfluss	Motore scolo
Ms	Interruptor Micro Subida	Microrupteur Montée	Rise Microswitch	Mikroschalter Heben	Iterruttore Micro Salita
PF	Potenciómetro Selector Funciones	Potentiomètre Sélecteur Fonctions	Functions Selector Potentiometer	Potentiometer Funktionswahlschalter	Potenziometro Selettore Funzioni
RC	Resistencias Cámara	Éléments Chauffants Chambre	Chamber Heating Element	Heizwiderstände Garraum	Resistenze Camere
RG	Rele General	Relais Général	Main Relay	Hauptrelais	Relè principale
RV	Resistencias Caldera	Éléments Chauffants Chaudière	Boiler Heating Element	Heizwiderstände Boiler	Resistenze Caldaia
Tc	Sonda Cámara	Sonde Chambre	Chamber Probe	Sonde Garraum	Sonda Camera
TCN	Termostato Condensación	Thermostat Condensation	Condensation Thermostat	Thermostat Kondensierung	Termostato Condensazione
Tg	Sonda Caldera	Sonde Chaudière	Boiler Probe	Sonde Boiler	Sonda Caldaia
Tn	Sonda Núcleo	Sonde Noyau	Core Probe	Kerntemperaturmessonde	Sonda Nucleo
TRF	Transformador	Transformateur	Transformer	Transformator	Trasformatore
TSC	Termostato Seguridad Cámara	Thermostat Sécurité Chambre	Chamber Safety Thermostat	Sicherheitsthermostat Garraum	Termostato Sicurezza Camera
TSV	Termostato Seguridad Caldera	Thermostat Sécurité Chaudière	Boiler Safety Thermostat	Sicherheitsthermostat Boiler	Termostato Sicurezza Caldaia
Tv	Sonda Vapor	Sonde Vapeur	Steam Probe	Sonde Dampf	Sonda Vapore
VAC	Bomba Vaciado	Pompe Vidange	Vacuum Pump	Ablasspumpe	Pompa scarico
MBA	Moto Bomba Aclarado	Pompe Rinçage	Rinsing Pump	Pumpe Ausspülen	Pompa Risciacquo
VC1, VC2	Ventilador Soplante Camara	Ventilateur Soufflant	Blowing Fan	Ventilator Gebläse	Ventilatore Soffiante
VCN	Electro válvula Condensación	Électrovanne Condensation	Condensation Solenoid Valve	Elektroventil Kondensierung	Elettrovalvola Condensazione
VDV	Electro válvula Llenado Caldera	Électrovanne Remplissage Chaudière	Chamber Filling Solenoid Valve	Elektroventil Füllung Boiler	Elettrovalvola di Riempimento Caldaia
VE	Ventilador Cuadro Eléctrico	Ventilateur Tableau Électrique	Fan Switchboard	Ventilator Elektrotafel	Ventilatore Quadro Elettrico
VF1,VF2	Variador de Frecuencia	Variateur Vitesse	Speed Variator	Geschwindigkeitsregler	Variatore di Velocità
VHM	Electro válvula Humidificador	Électrovanne Humidificateur	Humidifier Solenoid Valve	Elektroventil Befeuchtungsvorrichtung	Elettrovalvola Umidificatore
Vv	Ventilador Soplante Caldera	Ventilateur soufflement chaudière	Boiler Blowing Fan	Durchbrennenventilator zum Dampfkessel	Ventilatore Soffiante caldaia
	COLORES	**COULEURS**	**COLOUR**	**FARBEN**	**COLORE**
a	Azul	Bleu	Blue	Blau	Blu
am	Amarillo	Jaune	Yellow	Gelb	Giallo
am/ve	Amarillo/verde	Jaune / vert	Yellow / green	Gelb/grün	Giallo/verde
b	Blanco	Blanc	White	Weiß	Bianco
g	Gris	Gris	Grey	Grau	Grigio
m	Marrón	Marron	Brown	Braun	Marrone
n	Negro	Noir	Black	Schwarz	Nero
na	Naranja	Orange	Orange	Orange	Arancio
r	Rojo	Rouge	Red	Rot	Rosso
rs	Rosa	Rose	Pink	Rosa	Roseo
ve	Verde	Vert	Green	Grün	Verde
vi	Violeta	Violet	Purple	Violett	Viola
					T303042000