SIMAG

SD 40
SD 60

"J" SERIES

R 134 A VERSION

SPARE PARTS LIST
CATALOGO RICAMBI
CATALOGUE PIÈCES DÉTACHÉES
ERSATZTEILENKATALOG

090090.09 REV. 11/2007

PAGE PAGINA PAGE SEITE	TABLE OF CONTENTS	INDICE	TABLE DES MATIÈRES	INHALTVERZEICHNIS
1	TABLE OF CONTENTS	INDICE	TABLE DES MATIÈRES	INHALTVERZEICHNIS
2-3	UNIT PANELS	ASSIEME MOBILE	ENS. CARROSSERIE	MACHINE GEHÄUSE
4-5	REFRIGERANT SYSTEM AIR COOLED	SISTEMA REFRIGERANTE RAFFR. AD ARIA	CIRCUIT FRIGORIFIQUE REFROID. A AIR	GEFRIERSYSTEM LUFTGEKÜHLT
6-7	REFRIGERANT SYSTEM WATER COOLED	SISTEMA REFRIGERANTE RAFFR. AD ACQUA	CIRCUIT FRIGORIFIQUE REFROID. A EAU	GEFRIERSYSTEM WASSERGEKÜHLT
8-9	WATER SYSTEM	CIRCUITO IDRAULICO	CIRCUIT HYDRAULIQUE	WASSER SYSTEM
10-11	CONTROL BOX	SCATOLA DI CONTROLLO	BOITE ELECTRIQUE	SCHALTSCHRANK
12	COMPRESSON AND ELECTRIC COMPONENT CHARTS	TABELLA COMPRESSORI E COMPONENTI ELETTRICI	LISTE DES COMPRESSEURS ET COMPOSANTS ELECTRIQUE	KOMPRESSOR UND ELEKTRISCHER TEILLISTE

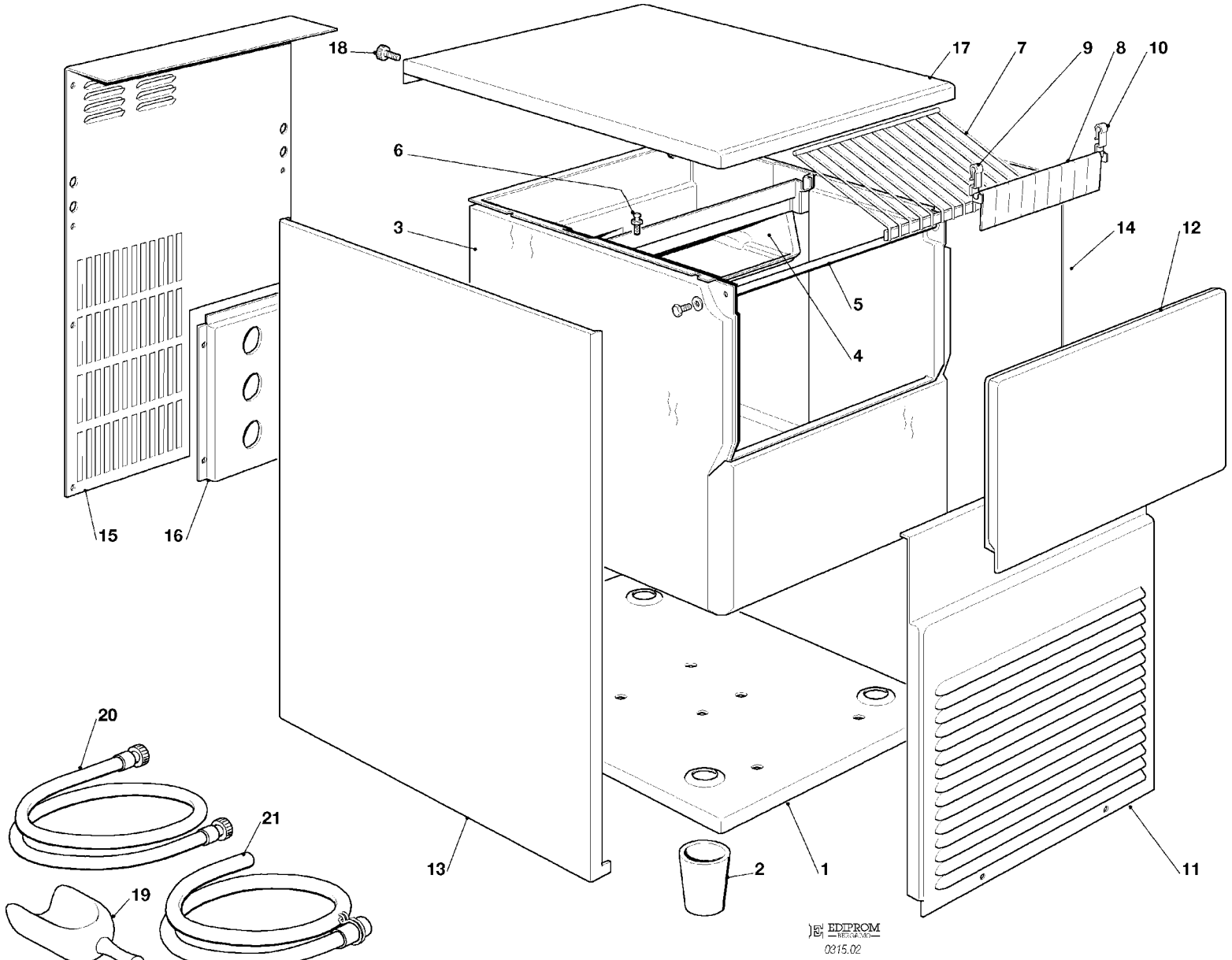
18
17
7
9
8
10
6
3
14
12
5
4
15
16
20
21
19
13
2
1
11
EDIPROM
0315.02

SD 40 - SD 60 - UNIT PANELS - ASSIEME MOBILE - ENS. CARROSSERIE - MACHINE GEHAUSE

ITEM NO POS NO REP. NO REF. NO	PART NO - CODICE REFERENCE - STUECK NR. **SD 40**	**SD 60**	DESCRIPTION	DESCRIZIONE	DESIGNATION	BESCHREIBUNG
1	781406 08		BASE	PIASTRA DI BASE	PLAQUE DE BASE	GRUNDPLATTE
2	660638 00		LEG	PIEDE REGOLABILE	PIED RÉGLABE	GERÄTEFUSS
3	782094 01R	782094 02R	INSULATED BIN ASSY	ASSIEME CELLA ISOLATA	ENS. CABINE	ISOLIEREISSPEICHER
4	660635 01		EVAPORATOR HOUSING	INVOLUCRO EVAPORATORE	CHAMBRE INTERIEUR	CELLE INTERN
5	732016 08		BIN DOOR BRACKET	ASTA SPORTELLO	TIGE PORTE	KLAPPENACHSE
6	650790 00		STUD	PERNO	AXE	STIFT
7	650714 00		ICE DEFLECTOR	GRIGLIA SCORRIMENTO CUBETTI	GRILLE GLISSEMENT GLAÇON	ABGLEITGRILL
8	783172 00R		CURTAIN ASSY	ASSIEME TENDINA	ENS. LAMELLE	ABDECKKLAPPE GESAMTHEIT
9	660388 00		RIGHT CURTAIN SUPPORT	SUPP. TENDINA DESTRO	SUPP. LAMELLE DROITE	RECHTE ABDECKLAPPE HALTERUNG
10	660388 01		LEFT CURTAIN SUPPORT	SUPP. TENDINA SINISTRO	SUPP. LAMELLE GAUCHE	LINKE ABDECKLAPPE HALTERUNG
11	721845 00	721846 00	FRONT PANEL S.S.	PANNELLO ANTERIORE INOX	PANNEAU AVANT ACIER INOX	VORDERWAND EDELSTAHL
12	782092 06		BIN DOOR	SPORTELLO	PORTE CABINE	SPEICHERTUER
13	721842 00	721844 00	LEFT SIDE PANEL S.S.	PANNELLO SINISTRO INOX	JOUE GAUCHE ACIER INOX	LINKE GEHÄUSESEITE EDELSTAHL
14	721841 00	721843 00	RIGHT SIDE PANEL S.S.	PANNELLO DESTRO INOX	JOUE DROITE ACIER INOX	RECHTEGEHÄUSESEITE EDELSTAHL
15	702324 00	702325 00	REAR PANEL	PANNELLO POSTERIORE	PANNEAU POSTERIEUR	HINTERE ABDECKUNG
16	702301 00		METAL BRACKET FOR FITTING	SUPPORTO ATTACCHI	SUPPORT DE RACCORDS	METALLTRÄGER
17	781432 02R		TOP PANEL S.S.	PANNELLO SUPERIORE INOX	ENS. COUVERCLE	DECKEL GESAMTHEIT
18	650806 00		REAR STUD	PERNO POSTERIORE	AXE ARRIÉRE	TRÄGER - HINTEN
19	650071 00		ICE SCOOP	SESSOLA	SASSE	EISSCHAUFEL
20	060513 00		KIT WATER SUPPLY HOSE	KIT TUBO ALIM. ACQUA	KIT TUYAU D'ALIM. EAU	WASSERANSCHLUSSCHLAUCH
21	060513 01		KIT WATER DRAIN HOSE	KIT TUBO SCARICO ACQUA	KIT TUYAU VIDANGE EAU	WASSER SLAUFSCHLAUCH
*	650805 00		SIMAG LOGO	TARGHETTA SIMAG	EMBLEME SIMAG	SIMAG ABGEBILDET
*	650805 14		SD 40 LOGO	TARGHETTA SD 40	EMBLEME SD 40	SD 40 ABGEBILDET
*	650805 15		SD 60 LOGO	TARGHETTA SD 60	EMBLEME SD 60	SD 60 ABGEBILDET

* only SD 60 A
solo SD 60 A

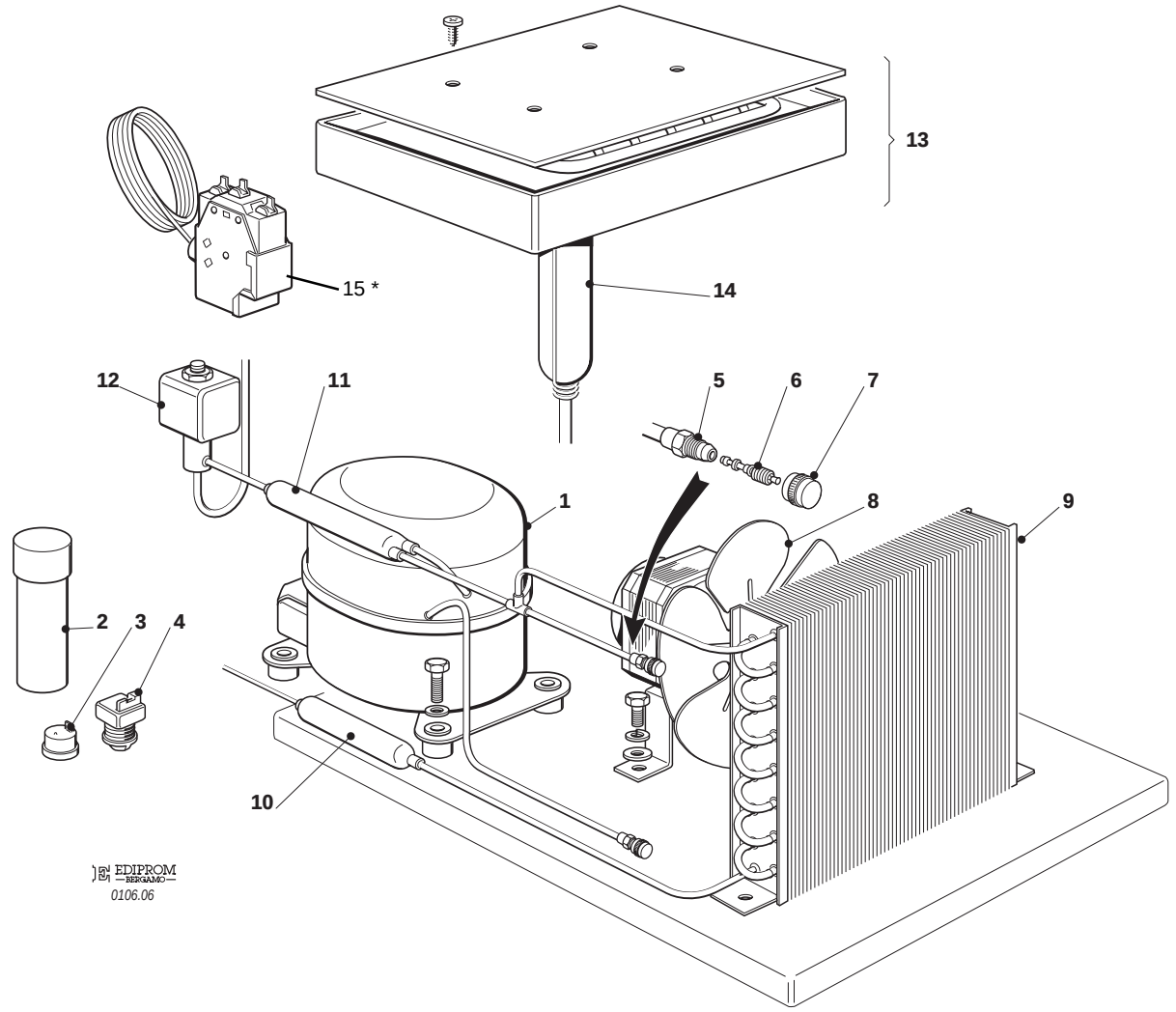

SD 40 - SD 60 - REFRIGERANT SYSTEM AIR COOLED - SISTEMA REFRIGERANTE RAFFR. AD ARIA
CIRCUIT FRIGORIFIQUE REFROID. PAR AIR - LUFTGEKÜHLT GEFRIERSYSTEM

ITEM NO POS NO REP. NO REF. NO	PART NO - CODICE REFERENCE - STUECK NR.		DESCRIPTION	DESCRIZIONE	DESIGNATION	BESCHREIBUNG
	SD 40	**SD 60**				
1	670100 00	670100 01	COMPRESSOR	COMPRESSORE	COMPRESSEUR	KOMPRESSOR
2	620167 29	620167 29	START CAPACITOR	CONDENSATORE D'AVVIAMENTO	CAPACITE DE DEMARRAGE	START CONDENSATOR
3	620478 03	620058 67	PROTECTOR	PROTETTORE	PROTECTEUR	SCHUTZGERAT
4	620057 31	620057 56	RELAY	RELÈ	RELAIS	RELAIS
5	650109 00		VALVE BODY	CORPO VALVOLA	CORPS DE VANNE	VENTILGEHAUSE
6	670012 00		VALVE PISTON	PISTONCINO VALVOLA	PISTON	VENTILKOLBEN
7	650106 00		VALVE CAP	CAPPUCCIO VALVOLA	CAPUCHON DE VANNE	VENTILKLAPPE
8	620419 02 620419 32	620419 33	FAN MOTOR FAN BLADE	MOTOVENTILATORE VENTOLA	MOTO-VENTILATEUR HELICE	LÜFTERMOTOR FLÜGEL
9	620420 00	620439 00	AIR COOLED CONDENSER	CONDENSATORE AD ARIA	CONDENSEUR	KONDENSATOR
10	630003 05		DRIER	FILTRO DEUMIDIFICATORE	FILTRE DESHYDRATEUR	TROCKNER
11	630137 00	630137 01	MECHANICAL FILTER	FILTRO MECCANICO	FILTRE MECANIQUE	MECHANISCHFILTERN
12	620306 48 620306 27		HOT GAS VALVE COIL HOT GAS VALVE BODY	BOBINA VALVOLA GAS CALDO CORPO VALVOLA GAS CALDO	BOBINE VANNE GAZ CHAUDS CORP VANNE GAZ CHAUDS	HEISSGAZ VENTIL SPULE VENTILGEHAUSE
13	784480 00	784480 01	EVAPORATOR ASSY	ASSIEME EVAPORATORE	ENS. EVAPORATEUR	VERDAMPFER
14	784444 03	784444 15	ACCUMULATOR ASSY	ASSIEME ACCUMULATORE	ENS. ACCUMULATEUR	SAMMLER UND SAUGLEITUNGEN
15	–	620075 00	PRESSURE CONTROL	PRESSOSTATO	PRESSOSTAT	PRESSOSTAT

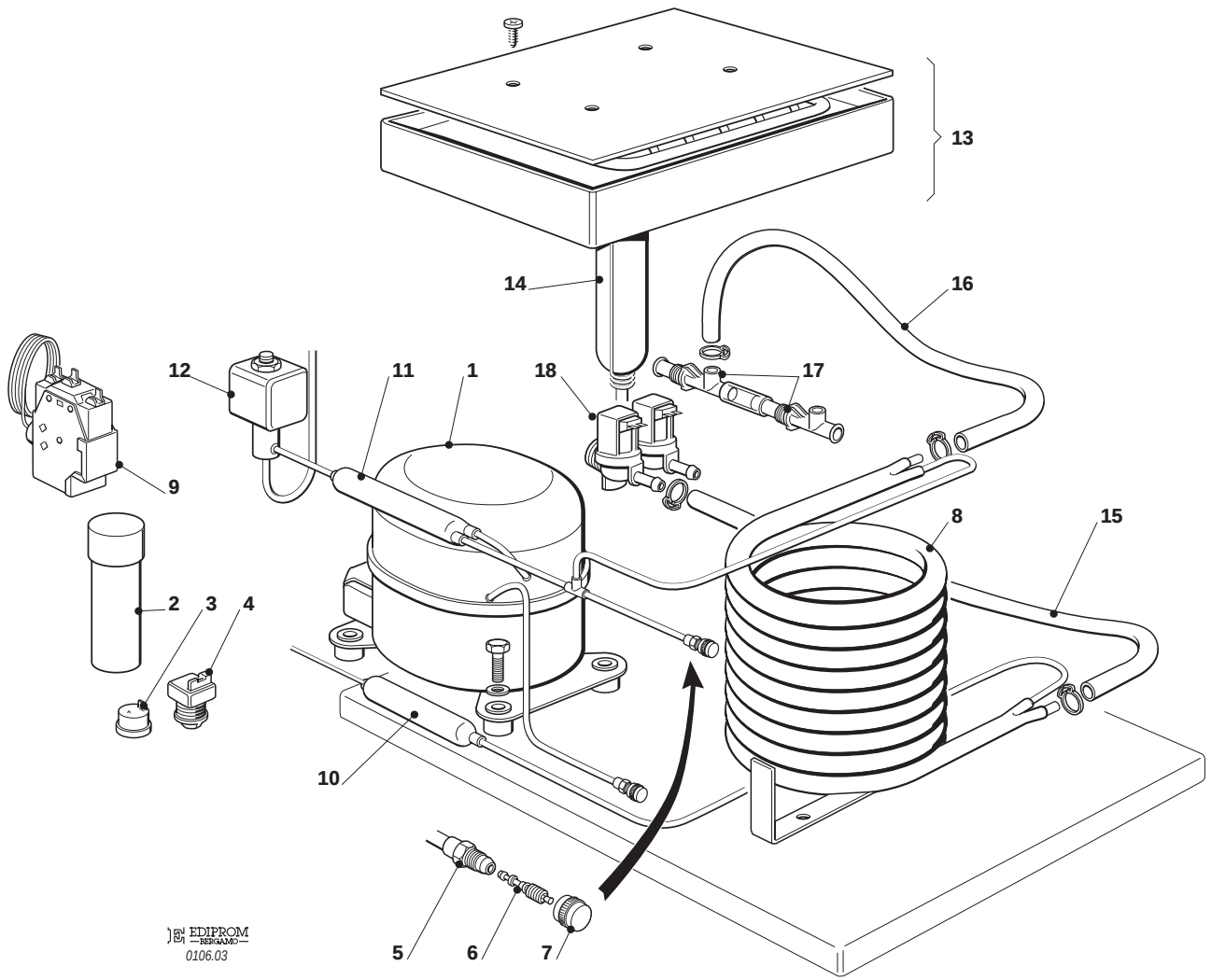
13
14
16
12
11
1
18
17
9
8
15
2
3
4
10
5
6
7
EDIPROM
BERGAMO
0106.03

SD 40 - SD 60 - REFRIGERANT SYSTEM WATER COOLED - SISTEMA REFRIGERANTE RAFFR. AD ACQUA
CIRCUIT FRIGORIFIQUE REFROID. PAR EAU - WASSERGEKOHL T GEFRIERSYSTEM

ITEM NO / POS NO / REP. NO / REF. NO	PART NO - CODICE / REFERENCE - STUECK NR. SD 40	SD 60	DESCRIPTION	DESCRIZIONE	DESIGNATION	BESCHREIBUNG
1	670100 00	67010001	COMPRESSOR	COMPRESSORE	COMPRESSEUR	KOMPRESSOR
2	620167 29	620167 29	START CAPACITOR	CONDENSATORE D'AWIAMENTO	CAPACITE DE DEMARRAGE	START CONDENSATOR
3	620478 03	620058 67	PROTECTOR	PROTETTORE	PROTECTEUR	SCHUTZGERAT
4	620057 31	620057 56	RELAY	RELÈ	RELAIS	RELAIS
5	650109 00		VALVE BODY	CORPO VALVOLA	CORPS DE VANNE	VENTILGEHAUSE
6	670012 00		VALVE PISTON	PISTONCINO VALVOLA	PISTON	VENTILKOLBEN
7	650106 00		VALVE CAP	CAPPUCCIO VALVOLA	CAPUCHON DE VANNE	VENTILKLAPPE
8	620389 00		WATER COOLED CONDENSER	CONDENSATORE ACQUA	CONDENSEUR A EAU	WASSER KONDENSATOR
9	620075 00*		PRESSURE CONTROL	PRESSOSTATO	PRESSOSTAT	PRESSOST A T
10	630003 05		DRIER	FILTRO DEUMIDIFICATORE	FILTRE DESHYDRATEUR	TROCKNER
11	630137 00	63013701	MECHANICAL FILTER	FILTRO MECCANICO	FIL TRE MECANIQUE	MECHANISCHFIL TERN
12	620306 48 620306 27		HOT GAS VALVE COI L HOT GAS VALVE BODY	BOBINA VALVOLA GAS CALDO CORPO VALVOLA GAS CALDO	BOBINE VANNE GAZ CHAUDS CORP VANNE GAZ CHAUDS	HEISSGAZ VENTI L SPULE VENTILGEHAUSE
13	784480 00	784480 01	EVAPORATOR ASSY	ASSIEME EVAPORATORE	ENS. EVAPORATEUR	VERDAMPFER
14	784444 03	784444 15	ACCUMULATOR ASSY	ASSIEME ACCUMULATORE	ENS. ACCUMULATEUR	SAMMLER UND SAUGLEITUNGEN
15	281900 01		PLASTIC TUBE - PER METER	TUBO PVC - PER METRO	TUYAU EN PLASTIQUE - POUR MT.	PLASTIK ROHR - PRO METER
16	281900 01		PLASTIC TUBE - PER METER	TUBO PVC - PER METRO	TUYAU EN PLASTIQUE - POUR MT.	PLASTIK ROHR - PRO METER
17	660224 00		WATER DRAIN FITTING	RACCORDO SCARICO ACQUA	RACCORD EVACUATION EAU	WASSERABFLUSSANSCHLUSSE
18	650105 70		WATER INLET VALVE	ELETTROV AL VOLA DOPPIA	VANNE ARRIVÈE EAU	ELEKTROVENTIL
	* 620499 01		FROM SD 40 S.N. MD 371526 SD 60 S. N. ME 461069	DA SD 40 MATRICOLA MD 371526 SD 60 MATRICOLA ME 461069	A PARTIR DU SD 40 N.S, MD 371526 SD 60 N.S. ME 461069	VON SD 40 S.N. MD 371526 SD 60 S.N. ME 461069

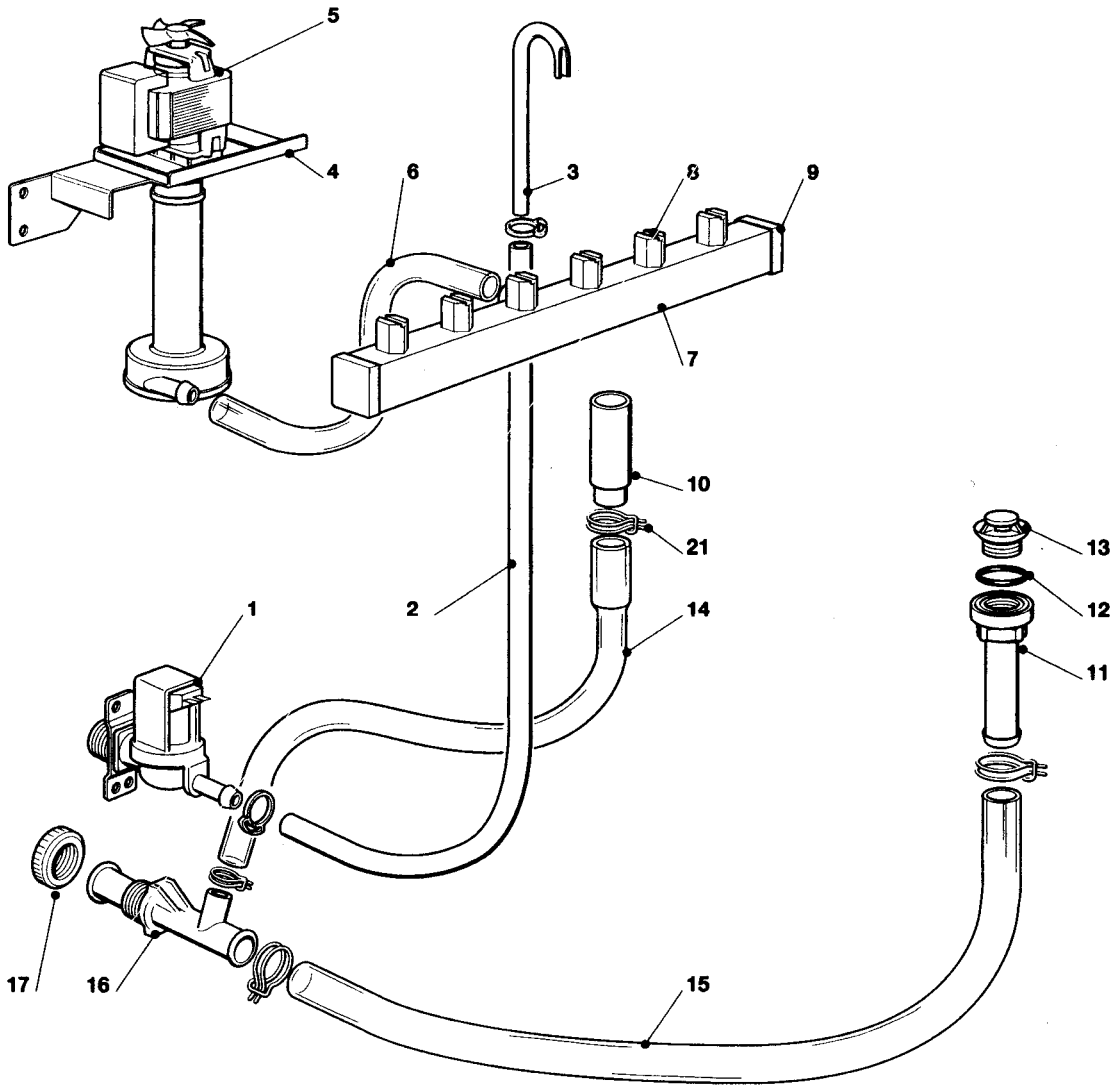
5
4
6
3
8
9
7
10
21
2
14
1
13
12
11
17
16
15

SD 40 - SD 60 - WATER SYSTEM - CIRCUITO IDRAULICO - CIRCUIT HYDRAULIQUE - WASSERSYSTEM

ITEM NO POS NO REP. NO REF. NO	PART NO - CODICE REFERENCE - STUECK NR. **SD 40** / **SD 60**	DESCRIPTION	DESCRIZIONE	DESIGNATION	BESCHREIBUNG
1	650105 66 650105 70	WATER INLET VALVE - AIR COOLED WATER INLET VALVE - WATER COOLED	VALVOLA INGR. ACQUA - RAFF. ARIA VALVOLA INGR. ACQUA - RAFF. ACQUA	VANNE ARRIVEE EAU - REFR. AIR VANNE ARRIVEE EAU - REFR. EAU	WASSEREINLAUFVENTIL - LUFTGEKÜHLT WASSEREINLAUFVENTIL - WASSERGEKÜHLT
2	281900 01	PLASTIC TUBE - PER METER	TUBO INGRESSO ACQUA	TUYAU EN PLASTIQUE - POUR MT.	PLASTIK ROHR - PRO METER
3	734683 00R	WATER INLET COPPER PIPE	TUBO RAME INGR. ACQUA	TUYAU ENTREE EAU CUIVRE	WASSEREINLAUFROHR - CUPPER
4	724333 00	METAL BRACKET	SUPPORTO POMPA INOX	SUPPORT METALLIQUE	METALLTRAEGER
5	620433 00	WATER PUMP	POMPA	POMPE A EAU	WASSER PUMPE
6	610150 03	PUMP INLET WATER PIPE	TUBO MANDATA POMPA	TUYAU DE REFOULEMENT POMPE	PUMPENABFLUSSCHLAUCH
7	650665 19 / 650665 20	SPRAY BAR	TUBO SPRUZZATORE	COLLECTEUR	KOLLEKTOR
8	660558 00 (8 x SD 40 / 10 x SD 60)	SPRAY JET	SPRUZZATORI	GICLEURS	SPRÜHDÜSEN
9	660557 00	PLUG	UGELLO SPRUZZATORE	BOUCHON POUR COLLECTEUR	STOPFEN
10	660698 02	OVERFLOW STAND PIPE	TUBO DI TROPPO PIENO	TROP PLEIN	UEBERLAUFROHR
11	660219 01	DRAIN FITTING	SCARICO CELLA	TUYAU EVACUATION	ABFLUSSROHR
12	640134 00	O RING	O-RING	JOINT TORIQUE	SIMMER RING
13	660211 01	DRAIN FILTER	FILTRO SCARICO CELLA	FILTRE CABINE STOCKAGE	BEHÄLTER ABLAUF FILTER
14	610191 01	OVERFLOW DRAIN TUBE	TUBO SCARICO TROPPO PIENO	TUYAU VIDANGE TROP PLAIN	BEHÄLTER ABLAUF
15	610148 20	STORAGE BIN DRAIN TUBE	TUBO SCARICO CONTENITORE	TUYAU VIDANGE CONTENEUR	BEHÄLTERAUSLAUFSCHLAUCH
16	660224 00	WATER DRAIN FITTING	RACCORDO A "T"	RACCORD EVACUATION EAU	WASSERABFLUSSANSCHLUSSE
17	660535 00	PLASTIC RING NUT	GHIERA	COLLIER DE SERRAGE EN PLAST.	PLASTIKRING MUTTER

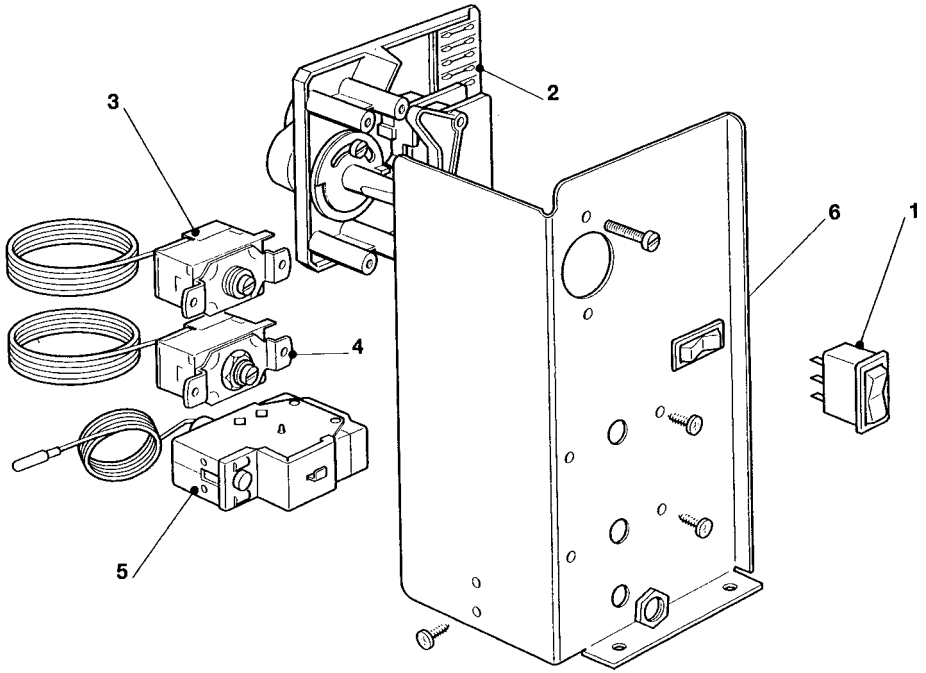
3
2
6
1
4
5

SD 40 - SD 60 - CONTROL BOX - SCATOLA DI CONTROLLO - BOITE ELECTRIQUE - SCHALTSCHRANK

ITEM NO POS NO REP. NO REF. NO	PART NO - CODICE REFERENCE - STUECK NR. **SD 40** | **SD 60**	DESCRIPTION	DESCRIZIONE	DESIGNATION	BESCHREIBUNG
1	620453 00	SWITCH	INTERRUTTORE LUMINOSO	INTERRUPTEUR LUMINEUX	SCHALTER
2	620441 00	TIMER	TIMER	MINUTERIE	TIMER
3	630005 00	BIN THERMOSTAT	TERMOSTATO CONTENITORE	THERMOSTAT CONTENEUR	BEHÄLTER THERMOSTAT
4	620201 01	EVAPORATOR THERMOSTAT	TERMOSTATO EVAPORATORE	THERMOSTAT EVAPORATEUR	VERDAMPFERTHERMOSTAT
5	620443 02	THERMOSTAT - SAFETY	TERMOSTATO DI SICUREZZA	THERMOSTAT DE SECURITÉ	SICHERHEITS THERMOSTAT
6	620442 02	SWITCH	COMMUTATORE UNIPOLARE	INTERRUPTEUR	UMSCHALTER

SD 40 - SD 60 - COMPRESSOR CHART - TABELLA COMPRESSORI - TABLEAU COMPRESSEUR - KOMPRESSOR KARTE

MODEL MODELLO MODELE MODELL	VOLTS TENSIONE TENSION SPANNUNG	COMPRESSOR MODEL MOD. COMPRESSORE TYPE COMPRESSEUR KOMPRESSOR TYP	COMPRESSOR COMPRESSORE COMPRESSEUR KOMPRESSOR	RELAY RELE' RELAIS RELAIS	PROTECTOR PROTETTORE PROTECTEUR SCHUTZGERAT	START CAPACITOR CAPACITA D'AVV. CAPACITE DE DEMARRAGE START KONDENSATOR
SD 40 SD 60	115/60/1	–	–	–	–	–
SD 40 SD 60	230/60/1 230/60/1	GL 90 TG GP 14 TG	670100 07 670100 08	620057 37 620057 67	620478 00 620058 98	620167 29 620167 29
SD 40 SD 60	230/50/1 230/50/1	GL 90 TB GP 14 TB	670100 00 670100 01	620057 31 620057 56	620478 03 620058 67	620167 29 620167 29

SD 40 - SD 60 - ELECTRIC COMPONENTS CHART - TABELLA COMPONENTI ELETTRICI
TABLEAU COMPOSANTS ELECTRIQUE - ELEKTRISCHEKARTE

MODEL MODELLO MODELE MODELL	VOLTS TENSIONE TENSION SPANNUNG	WATER PUMP POMPA POMPE A EAU WASSER PUMPE	FAN MOTOR ONLY MOTORE VENTILATORE MOTEUR VENTILATEUR LUFTER MOTOR	WATER INLET VALVE VALV. INGR. ACQUA V.E.M. ARRIVEE EAU WASSEREIN. VENTIL	HOT GAS VALVE COIL BOBINA VALVOLA GAS CALDO BOBINE V.E.M. GAZ CHAUDS HEISSGAZ VENTIL SPULE	TIMER TIMER MINUTERIE TIMER
SD 40 - 60	115/60/1	–	–	–	–	–
SD 40 - 60	230/60/1	620433 01	620419 02	650105 66 / 650105 70 (AIR / WATER)	620306 48	620441 00
SD 40 - 60	230/50/1	620433 00	620419 02	650105 66 / 650105 70 (AIR / WATER)	620306 48	620441 00

SIMAG
ICE MACHINES

www.simag.it

SIMAG
via Risorgimento, 4
20017 Mazzo di Rho (MI) - Italy
Tel. +39 02 93900215 (Commerciale - Sales Dept.)
Tel. +39 02 93960357 (Assistenza - Service Dept.)
Fax +39 02 93900226 (Commerciale - Sales Dept.)
Fax +39 02 93960366 (Assistenza - Service Dept.)
e-mail: sales@simag.it
e-mail: service@simag.it

Singapore Office
SIMAG FAR EAST
627A Aljunied Road
04-04 Biztech Centre
Singapore 389842
Tel. ++65 6738 5393
Fax ++65 6738 1959
e-mail: scotsice@singnet.com.sg

Certified ISO 9001
TOTAL QUALITY