# *DESPIECES*

# *BOTELLEROS*

# *BFP*

FAGOR INDUSTRIAL

***Rev.: Mar-2011***

**RECAMBIOS**
**BOTELLEROS**
**Mar-2011**

FAGOR
F A G O F R I

| Nº | CÓDIGO | DESCRIPCIÓN | BFP-100 A | BFP-150 A | BFP-200 A | BFP-250 A | BFP-100 I | BFP-150 I | BFP-200 I | BFP-250 I | BFP-300 I |
|---|---|---|---|---|---|---|---|---|---|---|---|
| 1 | 6007050112 | PATA BOTELLERO REGULABLE 65/88 | 4 | 4 | 4 | 6 | 4 | 4 | 4 | 6 | 6 |
| 2 | 6003050039 | BANDEJA BOTELLERO | 1 | 1 | 1 | 1 | 1 | 1 | 1 | 1 | 1 |
| 3 | 6027010090 | SEPARADOR VERTICAL BFP | 1 | 2 | 3 | 4 | 1 | 2 | 3 | 4 | 5 |
| 4 | 6003010124 | SOPORTE SEPARADOR BOTELLERO | 4 | 8 | 12 | 16 | 4 | 8 | 12 | 16 | 20 |
| 5 | 6003010326 | DESAG COMPL 3/4 GRIS+TUERCA | 1 | 1 | 1 | 1 | 1 | 1 | 1 | 1 | 1 |
| 6 | 6003010262 | TAPON DESAGÜE DE 3/4 CIEGO | 1 | 1 | 1 | 1 | 1 | 1 | 1 | 1 | 1 |
| 7 | 6003010327 | JUNTA GOMA DESAGÜE 3/4 | 1 | 1 | 1 | 1 | 1 | 1 | 1 | 1 | 1 |
| 8 | 6023010450 | PEG.CUAD.MAND BOT.FAGOR | 1 | 1 | 1 | 1 | 1 | 1 | 1 | 1 | 1 |
| 9 | B109010033 | REJILLA CUADRO DE MANDOS | 1 | 1 | 1 | 1 | 1 | 1 | 1 | 1 | 1 |
| 10 | 6033110032 | PUERTAS BOTELLERO BFP | 2 | 3 | 4 | 5 | 2 | 3 | 4 | 5 | 6 |
| 11 | 6029010094 | EVAPORADOR BFP-100 | 1 | | | | 1 | | | | |
| 11 | 6029010058 | EVAP.BOTELLERO G-120 | | 1 | | | | 1 | | | |
| 11 | 6029010059 | EVAP.BOTELLERO G-170 | | | 1 | | | | 1 | | |
| 11 | 6029010060 | EVAP.BOTELLERO G-220 | | | | 1 | | | | 1 | |
| 11 | 6029010061 | EVAP.BOTELLERO G-270 | | | | | | | | | 1 |
| 12 | 6021010153 | COMP.EMT45HDR | 1 | | | | 1 | | | | |
| 12 | 6021010004 | COMPR.FR-7,5-G R134A | | 1 | | | | 1 | | | |
| 12 | 6021010007 | COMPR.FR-8.5-G R134A | | | 1 | | | | 1 | | |
| 12 | 6021010154 | COMP.NEK6210Z EMBRACO | | | | 1 | | | | 1 | 1 |
| 13 | 6029020004 | CONDENSADOR 4X2 SIN BAFLE | 1 | | | | 1 | | | | |
| 13 | 6029020002 | CONDENSADOR 9x2 | | 1 | 1 | | | 1 | 1 | | |
| 13 | 6029020003 | CONDENSADOR 9x3 FAGC0021 | | | | 1 | | | | 1 | 1 |
| 14 | 6021050065 | VENT. 5W 200/28º IMPELENTE | 1 | | | | 1 | | | | |
| 14 | 6021050064 | VENT. 10W 254/22º IMPELENTE | | 1 | 1 | 1 | | 1 | 1 | 1 | 1 |
| 15 | V107020007 | CAPILAR 2x0,7x1600 | 1 | | | | 1 | | | | |
| 15 | V107020008 | CAPILAR 2x0,8x2000 BFP-150 | | 1 | | | | 1 | | | |
| 15 | V107020009 | CAPLIAR 2x1x3300 | | | 1 | | | | 1 | | |
| 15 | V107020010 | CAPILAR 2x1,25x2100 BFP-250 | | | | 1 | | | | 1 | 1 |
| 16 | 6047010004 | FILTRO DESHIDRAT.20GR 1/4X1/4 | 1 | 1 | 1 | 1 | 1 | 1 | 1 | 1 | 1 |
| 17 | 6021010200 | RELE ARRANQUE EMT 45 HDR | 1 | | | | 1 | | | | |
| 17 | 6021010045 | RELE ARRANQ COMPR.FR-7.5G 6001 | | 1 | | | | 1 | | | |
| 17 | 6021010025 | RELE ARRANQUE COMPRESOR FR-8,5G 2 | | | 1 | | | | 1 | | |
| 17 | 6021010156 | RELE ARRAN. COMP. NEK 6210Z | | | | 1 | | | | 1 | 1 |
| 18 | 6021010201 | COMPR.ARRANQUE EMT 45 HDR | 1 | | | | 1 | | | | |
| 18 | 6021010037 | CONDEN.ARRANQUE FR-117U5015 80 mF | | 1 | 1 | | | 1 | 1 | | |
| 18 | 6021010158 | CONDENSADOR COMP. NEK 6210Z | | | | 1 | | | | 1 | 1 |
| 19 | 6021390006 | MANG 3X1X2500 BL. SCHUKO 3T | 1 | 1 | 1 | 1 | 1 | 1 | 1 | 1 | 1 |
| 20 | 6021130001 | INT.BIP.AMB.O/I CONTAC.REFORZ. | 1 | 1 | 1 | 1 | 1 | 1 | 1 | 1 | 1 |
| 21 | 6021350023 | TERMOST.RANCO Y TAPON MONEDA | 1 | 1 | 1 | 1 | 1 | 1 | 1 | 1 | 1 |
| 22 | 6021350022 | BOTÓN MANDO TERM.ANALG. BOTELLERO | 1 | 1 | 1 | 1 | 1 | 1 | 1 | 1 | 1 |
| 23 | B181010001 | C. J. ENCIMERA BFP-100 | 1 | | | | 1 | | | | |
| 23 | B181010002 | C.J. ENCIMERA BFP-150 | | 1 | | | | 1 | | | |
| 23 | B181010003 | C.J. ENCIMERA BFP-200 | | | 1 | | | | 1 | | |
| 23 | B181010004 | C.J. ENCIMERA BFP-250 | | | | 1 | | | | 1 | |
| 23 | B181010005 | C.J. ENCIMERA BFP-300 | | | | | | | | | 1 |
| 24 | B161130002 | EMBELLECEDOR COMPLETO BFP-100 | 1 | | | | 1 | | | | |
| 24 | B161130004 | EMBELLECEDOR COMPLETO BFP-150 | | 1 | | | | 1 | | | |
| 24 | B161130006 | EMBELLECEDOR COMPLETO BFP-200 | | | 1 | | | | 1 | | |
| 24 | B161130008 | EMBELLECEDOR COMPLETO BFP-250 | | | | 1 | | | | 1 | |
| 24 | B161130010 | EMBELLECEDOR COMPLETO BFP-300 | | | | | | | | | 1 |

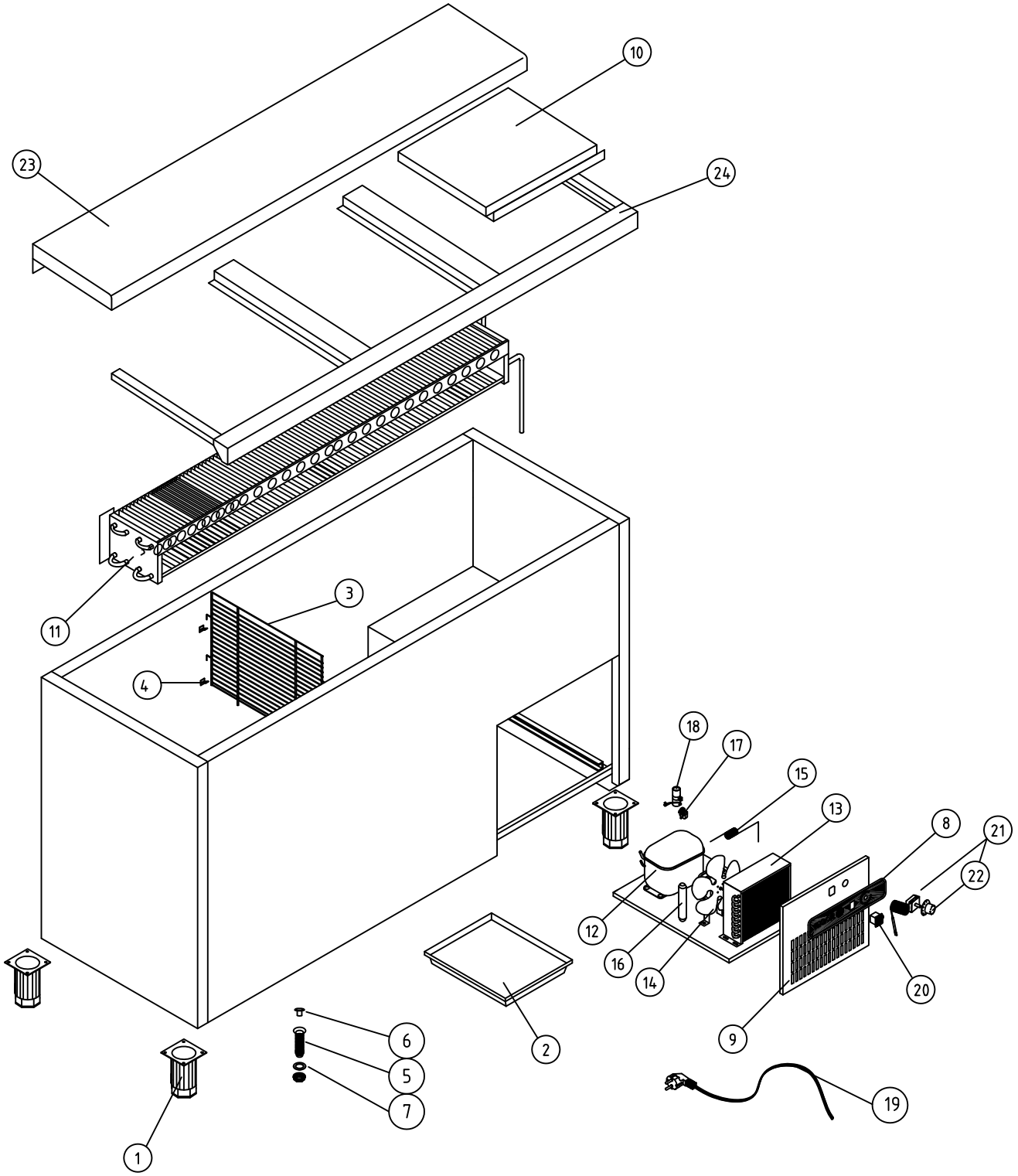


ENFRIADORES DE BOTELLAS

COD. PIEZA: .

COTAS SIN TOLERANCIA DIN 7168-f

Material: .

SUSTITUYE A: ..

Acabado:

SUSTITUIDO POR: .

| ANGULAR | GRADO TOLERANCIA | FINO | MEDIO | GRUESO |
|---|---|---|---|---|
| | HASTA 10 mm | ±1° | | ±1° 30' |
| | MAS DE 10 A 50 mm | ±30' | | ±50' |
| | MAS DE 50 A 120 mm | ±20' | | ±25' |
| | MAS DE 120 A 400 mm | ±10' | | ±15' |
| | MAS DE 400 mm | ±5' | | ±10' |

| LINEAL | GRADO TOLERANCIA | FINO | MEDIO | GRUESO |
|---|---|---|---|---|
| | HASTA 3 mm | ±0,05 | ±0,10 | ±0,15 |
| | MAS DE 3 A 6 mm | ±0,05 | ±0,10 | ±0,20 |
| | MAS DE 6 A 30 mm | ±0,10 | ±0,20 | ±0,50 |
| | MAS DE 30 A 120 mm | ±0,15 | ±0,30 | ±0,80 |
| | MAS DE 120 A 400 mm | ±0,20 | ±0,50 | ±1,20 |
| | MAS DE 400 A 1000 mm | ±0,30 | ±0,80 | ±2,00 |
| | MAS DE 1000 A 2000 mm | ±0,50 | ±1,20 | ±3,00 |

COMÚN A

| MODELO | Ud. | MODELO | Ud. | MODELO | Ud. | MODIFICACIÓN Nº | RESPONSABLE |
|---|---|---|---|---|---|---|---|
| BFP | 1 | | | | | 2 | A.J.GONZALEZ |
| | | | | | | | |
| | | | | | | Fecha: Mar-2011 | |

| A4 | Nombre | Fecha |
|---|---|---|
| Dibujado | BMM | 9-12-08 |

FAGOR

FAGOR FRI

Escala 1:18

# RECAMBIOS BFP

Código máquina: .