DESPIECE TECNICO / SPARE PARTS BOM

# Hornos eléctricos
# Fours électriques
# Electric ovens
# Elecktro heissluftdämpfer
# Forni elettrici
# Fornos eletricos

## Modelos / Models:

**AE-202**
**ACE-202**
**APE-202**

***Julio 2012 July***
***Revisado Abril 2016 April Revised***

FAGOR

FAGOR INDUSTRIAL

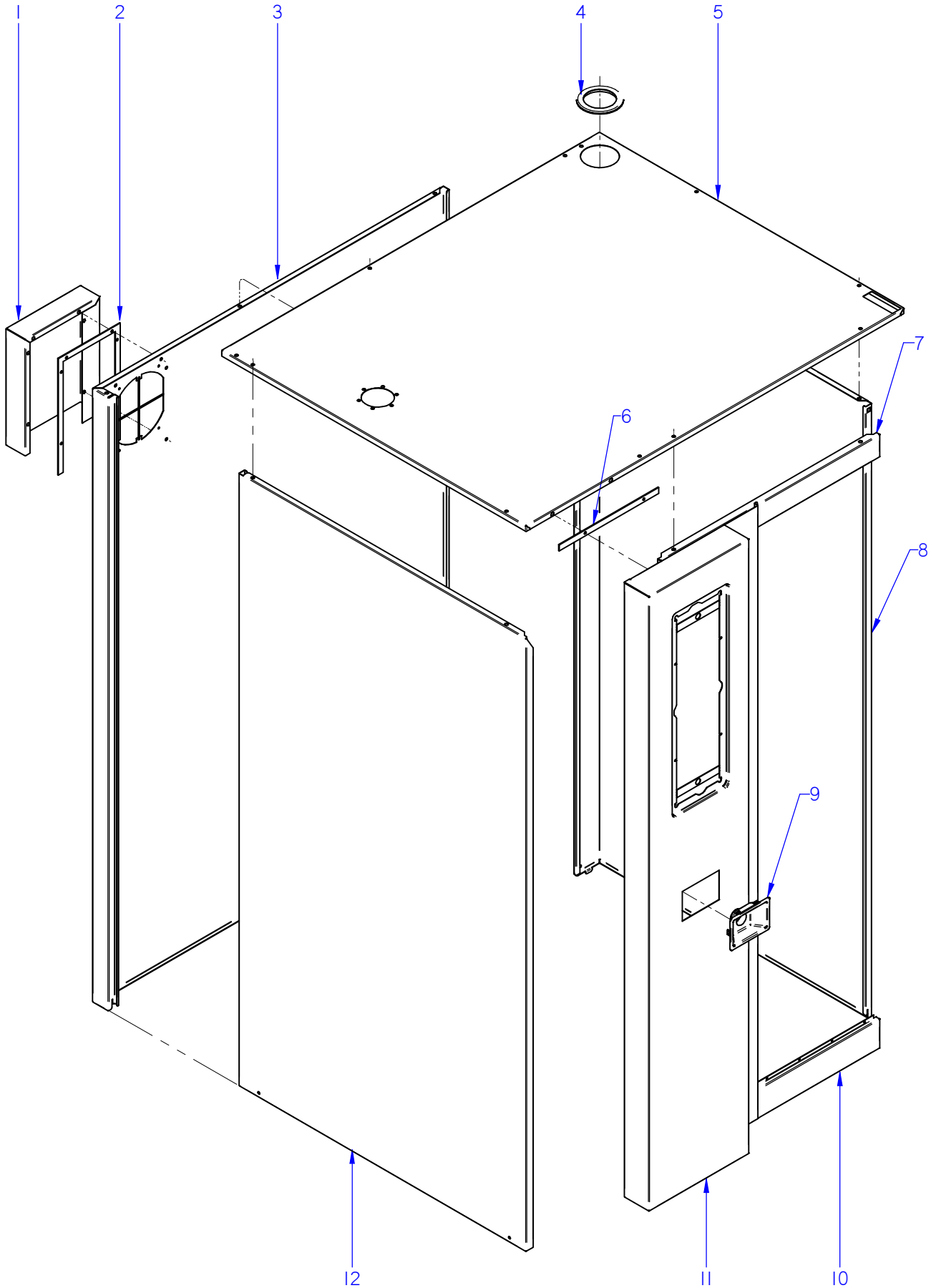


ITEM MARCADO EN COLOR = REPUESTO RECOMENDADO
COLOURED ITEM = RECOMMENDED SPARE PART

| Nº plano / N º plane | Firma | Fecha / Date | Denominación / Denomination: MUEBLE / UNIT | Lamina / Sheet | |
|---|---|---|---|---|---|
| C-3034 | | 2012-07 | HORNOS AE; ACE; APE-202 | 1 | Fagor Industrial S.Coop. FAGOR Oñate |

| MOD. | HORNOS / OVEN | ZONA / ZONE | MUEBLE / UNIT | PLANO DIAGRAM | C-3034 |
|---|---|---|---|---|---|

| ITEM | CODIGO REFERENCE | DENOMINACION | DENOMINATION | ACE-202 | AE-202 | APE-202 | | | | | RECOMEND. | ELIMINADO ELIMINATED | INTRODUCID. INTRODUCED | NOTAS |
|---|---|---|---|---|---|---|---|---|---|---|---|---|---|---|
| 1 | 12022556 | CHAPA SEPARACION IPX5 20-21 | SEPARATION PLATE IPX5 20-21 | 1 | 1 | 1 | | | | | | 01.11.12 | | |
| 1 | 12022557 | CHAPA SEPARACI. IPX5 20 SOLD. | SEPARAT. PLATE IPX5 20 WEL. | 1 | 1 | 1 | | | | | | | 01.11.12 | |
| 2 | 12024081 | JUNTA IPX5 20-21 | SEAL IPX5 20-21 | 1 | 1 | 1 | | | | | | | | |
| 3 | 12039348 | PANEL POSTERIOR 202 | REAR PANEL 202 | 1 | 1 | 1 | | | | | | | | |
| 4 | 12039366 | PASAMUROS Ø73 | THROUGH Ø73 | 2 | 2 | 2 | | | | | | | | |
| 5 | 12043721 | PANEL SUPERIOR SOLD. APE 202 | TOP PANEL APE 202 SOLDIER | 1 | 1 | 1 | | | | | | | | |
| 6 | 12039370 | JUNTA PORTAMANDOS 202 | CONTROL PANEL SEAL 202 | 1 | 1 | 1 | | | | | | | | |
| 7 | 12039353 | PANEL FRONTAL SUPE. 202 | UPPER FRONT PANEL 202 | 1 | 1 | 1 | | | | | | | | |
| 8 | 12039347 | PANEL EXTERIOR DCHO 202 | RIGHT PANEL 202 | 1 | 1 | 1 | | | | | | | | |
| 9 | 12041736 | EMBELLECEDOR DUCHA AD | SHOWER TRIM AD | _ | 1 | 1 | | | | | | | | |
| 10 | 12039344 | PANEL FRONTAL INFER. 202 | LOWER FRONT PANEL 202 | _ | 1 | 1 | | | | | | | | |
| 11 | 12095165 | PANEL PORTAMANDOS AC 202 | CONTROL PANEL AC 202 | 1 | _ | _ | | | | | | 01.06.14 | 02.10.13 | |
| 11 | 12135177 | KIT PORTAMANDO 202 ACE | CONTROL PANEL 202 ACE | 1 | _ | _ | | | | | | | 01.06.14 | |
| 11 | 12039418 | PORTAMANDOS APG 202 | CONTROL PANEL APG 202 | _ | 1 | 1 | | | | | | 01.06.14 | 01.10.13 | |
| 11 | 12135176 | KIT PORTAMANDO 202 ADV PL. | CONTROL PANEL 202 ADV PLUS | _ | 1 | 1 | | | | | | | 01.06.14 | |
| 12 | 12039364 | PANEL EXT. IZQUIERDO 202 ADV | REAR LEFT PANEL 202 ADV | 1 | 1 | 1 | | | | | | | | |

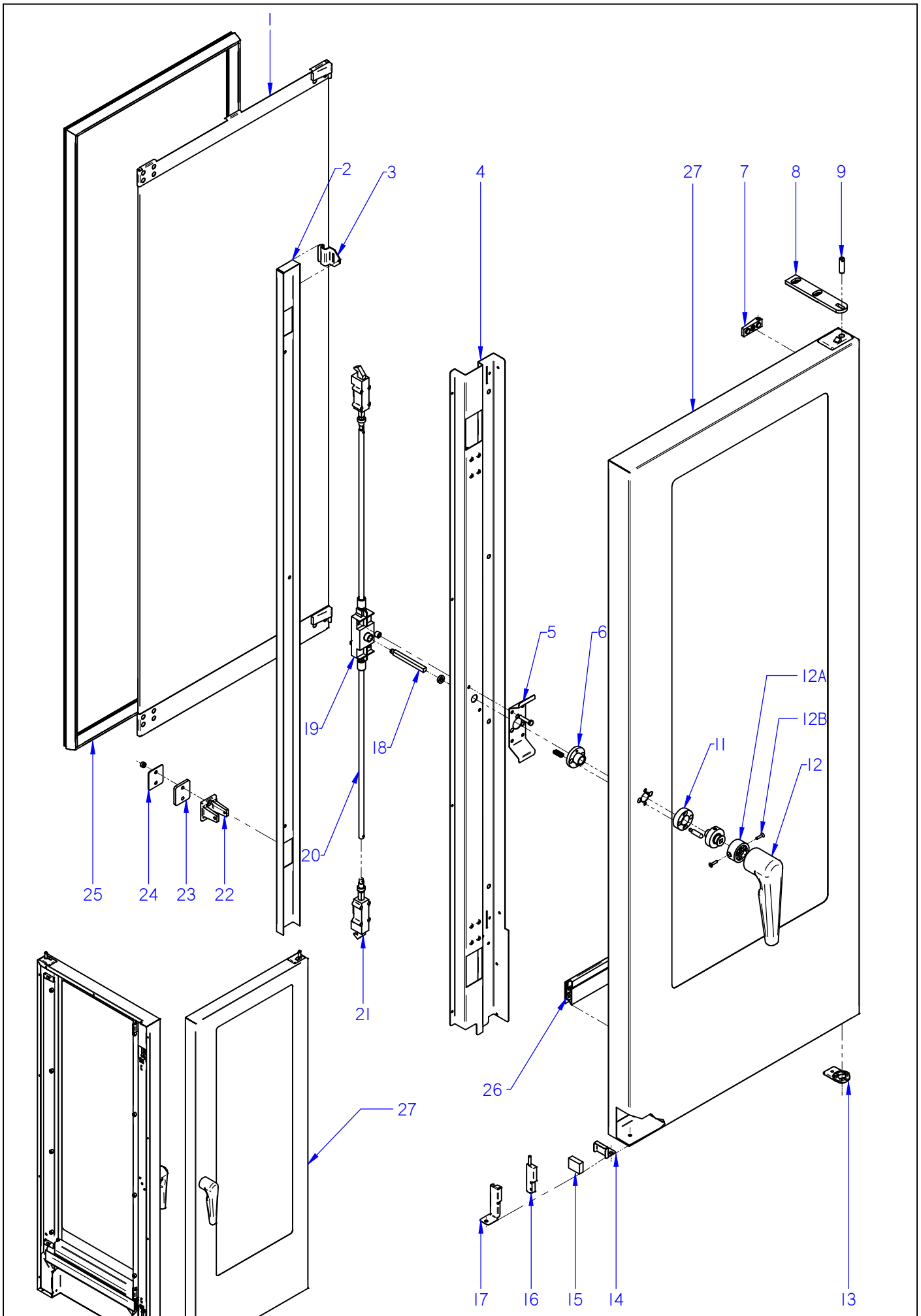


ITEM MARCADO EN COLOR = REPUESTO RECOMENDADO
COLOURED ITEM = RECOMMENDED SPARE PART

| Nº plano / N º plane | Firma | Fecha / Date | Denominación / Denomination: PUERTA / DOOR | Lamina / Sheet | |
|---|---|---|---|---|---|
| C-3035 | | 2012-07 | HORNOS AE; ACE; APE-202 | 2 | Fagor Industrial S.Coop. FAGOR Oñate |

| MOD. | HORNOS / OVEN | ZONA / ZONE | PUERTA (HASTA 06-2014) / DOOR (UNTIL 06-2014) | PLANO DIAGRAM | C-3035 |
|---|---|---|---|---|---|

| ITEM | CODIGO REFERENCE | DENOMINACION | DENOMINATION | ACE-202 | AE-202 | APE-202 | | | | | RECOMEND. | ELIMINADO ELIMINATED | INTRODUCID. INTRODUCED | NOTAS |
|---|---|---|---|---|---|---|---|---|---|---|---|---|---|---|
| **1** | **12039272** | **KIT CRISTAL INTER. 202** | **202 INNER GLASS KIT** | **1** | **1** | **1** | | | | | | | | |
| 2 | 12039324 | TAPA CIERRE PUERTA 202 | DOOR CLOSING COVER 202 | 1 | 1 | 1 | | | | | | | | |
| 3 | 12024319 | PESTILLO | INNER GLASS HINGE | 2 | 2 | 2 | | | | | | | | |
| 4 | 12039302 | CONTRAPUERTA MANILLA 202 | COMPLETE HANDLE DOOR 202 | 1 | 1 | 1 | | | | | | | | |
| 5 | 12039326 | SUPLEMENTO SUJ. CERRADURA | LOCK FIXING SUPPLEMENT | 1 | 1 | 1 | | | | | | | | |
| 6 | 12024389 | GUIA MANILLA | HANDLE GUIDE | 1 | 1 | 1 | | | | | | | | |
| | 12023608 | PITON ENGANCHE PUERTA | DOOR FASTENER SPIKE | 2 | 2 | 2 | | | | | | | | |
| 7 | 12024402 | BASE DE BISAGRA | HINGE BASE | 2 | 2 | 2 | | | | | | | | |
| 8 | 12039312 | BISAGRA SUPERIOR | UPPER HINGE | 1 | 1 | 1 | | | | | | | | |
| | 12010106 | TORNILLO ALLEN INOX. M6X35MM | ALLEN BOLT STAINLE.M6X35MM | 3 | 3 | 3 | | | | | | | | |
| 9 | 12023636 | EJE SUPERIOR | UPPER SHAFT | 1 | 1 | 1 | | | | | | | | |
| 11 | 12024505 | SOPORTE RESORTE | SPRING HOLDER | 1 | 1 | 1 | | | | | | | | |
| 12A | 12102288 | INSERTO AMARRE | FASTENING INSERT | 1 | 1 | 1 | | | | | | | 09,06,15 | |
| 12B | 12010262 | TORNILLO AVELLANADO M4X15 | COUNTERSUNK SCREW M4x15 | 2 | 2 | 2 | | | | | | | 09,06,15 | |
| 12 | 12044776 | ASA COMPLETA 2/1 ADVANCE | HANDLE 2/1 ADVANCE | 1 | 1 | 1 | | | | | | | | |
| 13 | 12039311 | BASE BISAGRA INFERIOR PUERTA | LOWER DOOR HINGE BASE | 1 | 1 | 1 | | | | | | 02.09.13 | | |
| 13 | 12047967 | BASE BISAGRA INFERIOR 6 DIEN | LOWER HINGE BASE | 1 | 1 | 1 | | | | | | | 02.09.13 | |
| 14 | 12022049 | SOPORTE IMAN | MAGNET HOLDER | 1 | 1 | 1 | | | | | | | | |
| 15 | 12024384 | IMAN | MAGNET | 1 | 1 | 1 | | | | | | | | |
| 16 | 12024560 | INTERRUPTOR MAGNETICO AC | MAGNETIC SWITCH AC | 1 | 1 | 1 | | | | | | | | |
| 17 | 12022166 | SOPORTE MICRO PUERTA | DOOR MICRO SWITCH | 1 | 1 | 1 | | | | | | | | |
| 18 | 12024799 | EJE DE MANILLA PUERTA | LEVER SHAFT | 1 | 1 | 1 | | | | | | | | |
| 19 | 12024673 | MECANISMO CIERRE | CLOSING MECHANISM | 1 | 1 | 1 | | | | | | | | |
| 20 | 12039308 | TUBO ALARGADERA 201/202 ADV | ROD 201/202 ADV | 2 | 2 | 2 | | | | | | | | |
| 21 | 12024657 | ELEMENTO CIERRE | CLOSING COMPONENT | 2 | 2 | 2 | | | | | | | | |
| 22 | 12024495 | ENGANCHE PUERTA | FASTENER | 2 | 2 | 2 | | | | | | | | |
| 23 | 12024380 | SUPLEMENTO ENGANCHE | FASTENER SUPPLEMENT | 2 | 2 | 2 | | | | | | | | |
| 24 | 12022138 | CALZO DE ENGANCHE | COUPLING CHOCK | 4 | 4 | 4 | | | | | | | | |
| 25 | 12039298 | JUNTA PUERTA 202 | DOOR JOINT 202 | 1 | 1 | 1 | | | | | | | | |
| 26 | 12039307 | JUNTA CIERRE INFERIOR 202 | LOWER LOCK JOINT 202 | 1 | 1 | 1 | | | | | | | | |
| **27** | **12046024** | **KIT PUERTA 202** | **DOOR 202 KIT** | **1** | **1** | **1** | | | | | | | | |

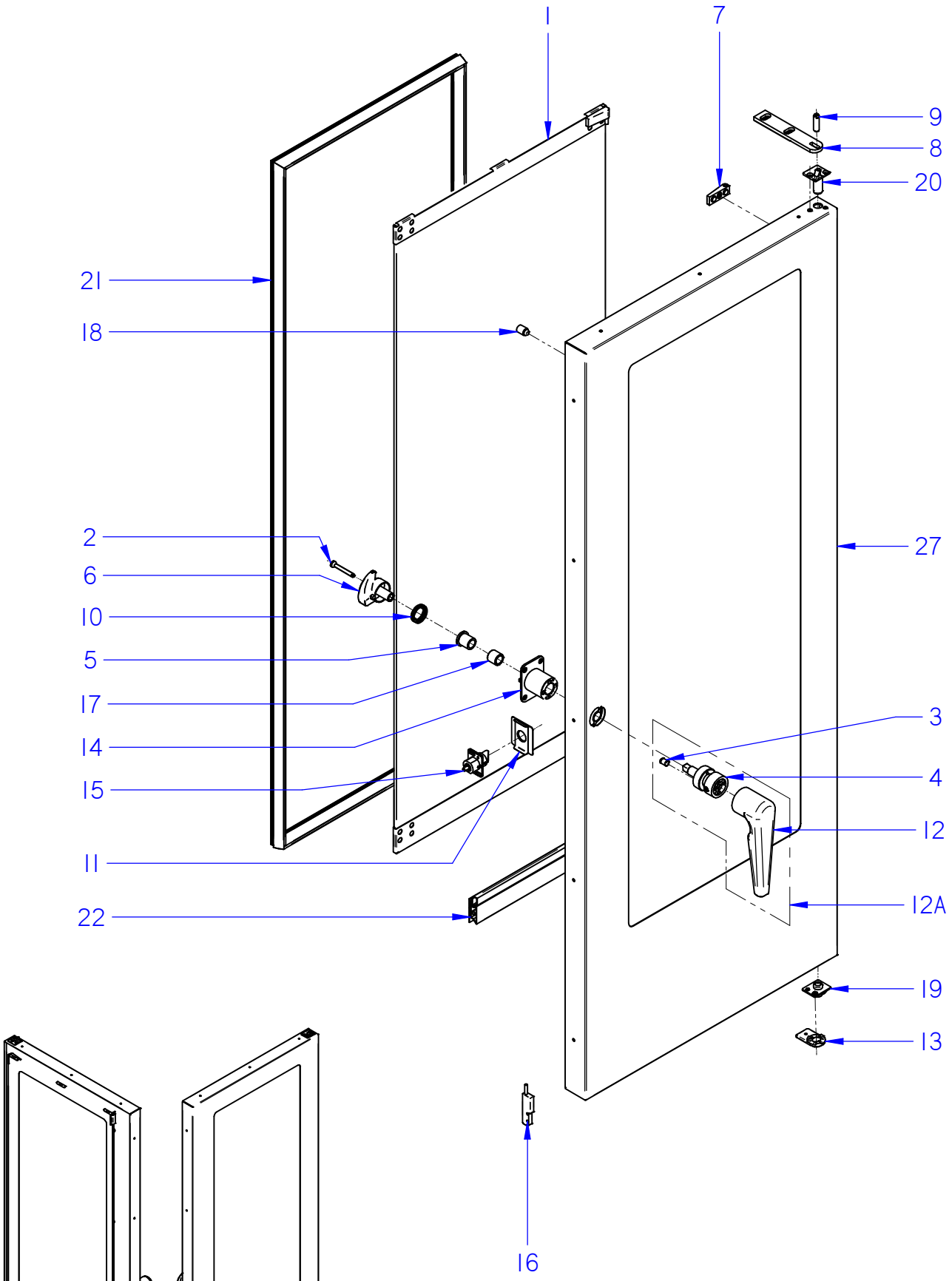


ITEM MARCADO EN COLOR = REPUESTO RECOMENDADO
COLOURED ITEM = RECOMMENDED SPARE PART

| Nº plano / Drawing N. | Firma / Signature | Fecha / Date | Denominación / Denomination: PUERTA / DOOR | Lamina / Sheet | |
|---|---|---|---|---|---|
| C-3035-14 | Iban R. | 03-2016 | HORNOS AE; ACE; APE-202 | 2-14 | Fagor Industrial S.Coop. FAGOR Oñate |

| MOD. | HORNOS / OVEN | ZONA / ZONE | PUERTA (DESDE 06-2014) / DOOR (FROM 06-2014) | PLANO DIAGRAM | C-3035-14 |
|---|---|---|---|---|---|

| ITEM | CODIGO REFERENCE | DENOMINACION | DENOMINATION | ACE-202 | AE-202 | APE-202 | | | | | RECOMEND. | ELIMINADO ELIMINATED | INTRODUCID. INTRODUCED | NOTAS / NOTES |
|---|---|---|---|---|---|---|---|---|---|---|---|---|---|---|
| 1 | **12039272** | **KIT CRISTAL INTER. 202** | **202 INNER GLASS KIT** | **1** | **1** | **1** | | | | | X | | | |
| 2 | 12097552 | TORNILLO AVELLANADO M6x50 | COUNTERSAUNK SCREW M6x50 | 1 | 1 | 1 | | | | | | | | |
| 3 | 12049719 | POSICIONADOR DE BOLA MUELLE | BALL-SPRING FIXER | 1 | 1 | 1 | | | | | | | | |
| 4 | 12131277 | KIT INSERTOS ASA 20X | KIT HANDLE INSERTS 20X | 1 | 1 | 1 | | | | | | | | |
| 5 | 12025100 | CASQUILLO SELFOIL 16-22-25 | SELFOIL BUSHING 16-22-25 | 1 | 1 | 1 | | | | | | | | |
| 6 | 12049692 | LEVA CIERRE UNICO 20X ADV | SINGLE LOCK CAM 20X ADV | 1 | 1 | 1 | | | | | | | | |
| 7 | 12024402 | BASE DE BISAGRA | HINGE BASE | 2 | 2 | 2 | | | | | | | | |
| 8 | 12039312 | BISAGRA SUPERIOR | UPPER HINGE | 1 | 1 | 1 | | | | | X | | | |
| 9 | 12023636 | EJE SUPERIOR | UPPER SHAFT | 1 | 1 | 1 | | | | | | | | |
| 10 | 12093685 | MUELLE LEVA PUERTA ADVANCE | CAM SPRING ADVANCE DOOR | 1 | 1 | 1 | | | | | | | | |
| 11 | 12094299 | TAPA PESTILLO PUERTA COMPLETA | COMPL. DOOR BOLT COVER | 1 | 1 | 1 | | | | | | | | |
| 12 | 12044773 | ASA ADVANCE | ADVANCE HANDLE | 1 | 1 | 1 | | | | | | | | |
| 12A | 12135274 | REP. ASA COMP. 20X CIERRE UNICO | SPARE SINGLE LOCK 20X HANDLE | 1 | 1 | 1 | | | | | X | | | |
| 13 | 12047967 | BASE BISAGRA INFERIOR 6 DIEN | LOWER HINGE BASE | 1 | 1 | 1 | | | | | X | | | |
| 14 | 12049691 | SOPORTE MANILLA 20X | 20X HANDLE SUPPORT | 1 | 1 | 1 | | | | | | | | |
| 15 | 12113376 | MOD PITON PUERTA | DOOR BOLT MODULE | 1 | 1 | 1 | | | | | | | | |
| 16 | 12024560 | INTERRUPTOR MAGNETICO AC | MAGNETIC SWITCH AC | 1 | 1 | 1 | | | | | X | | | |
| 17 | 12097533 | CASQUILLO SELFOIL TIPOA 16-22-20 | SELFOIL BUSHING 16-22-20 | 1 | 1 | 1 | | | | | | | | |
| 18 | 12024794 | TOPE CRISTAL INTERIOR | INNER GLASS BLOCK | 9 | 9 | 9 | | | | | | | | |
| 19 | 12049660 | BISAGRA INF. 202 ADV 6 DIENTES | LOWER HINGE 202 ADV. 6 TEETH | 1 | 1 | 1 | | | | | | | | |
| 20 | 12049282 | BISAGRA SUP. 202 TOPE ALTO | TOP HINGE 202 | 1 | 1 | 1 | | | | | | | | |
| 21 | 12039298 | JUNTA PUERTA COMPL.202 ADV | DOOR JOINT 202 ADV | 1 | 1 | 1 | | | | | X | | | |
| 22 | 12039307 | JUNTA CIERRE INFERIOR 202 | LOWER LOCK JOINT 202 | 1 | 1 | 1 | | | | | X | | | |
| 23 | **12094579** | **KIT PUERTA 202 CIERRE UNICO** | **SINGLE LOCK DOOR 202 KIT** | **1** | **1** | **1** | | | | | X | | | |
| | | | | | | | | | | | | | | |
| | | | | | | | | | | | | | | |
| | | | | | | | | | | | | | | |
| | | | | | | | | | | | | | | |
| | | | | | | | | | | | | | | |
| | | | | | | | | | | | | | | |
| | | | | | | | | | | | | | | |

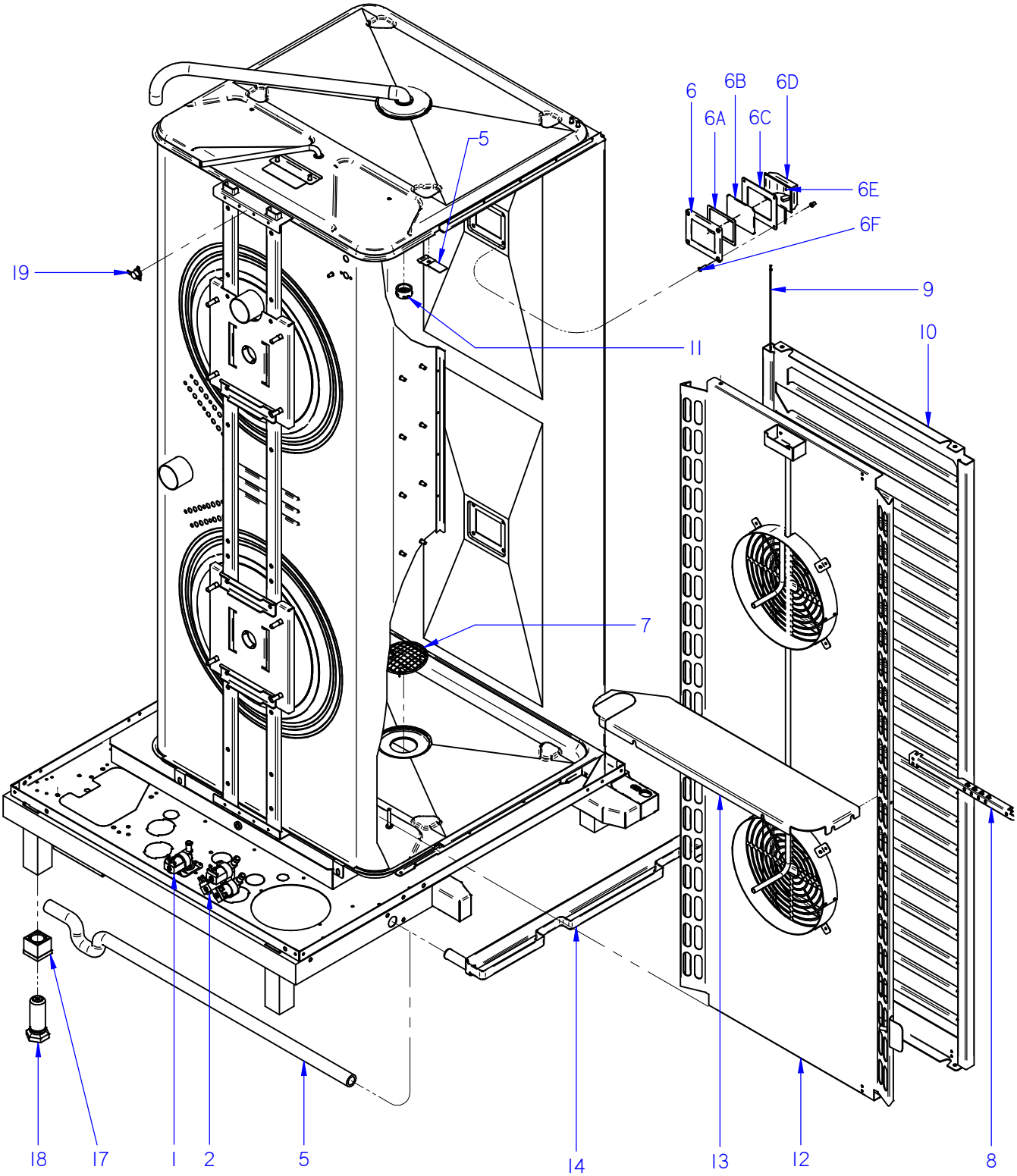


ITEM MARCADO EN COLOR = REPUESTO RECOMENDADO
COLOURED ITEM = RECOMMENDED SPARE PART

| Nº plano / N º plane | Firma / Signature | Fecha / Date | Denominación / Denomination: MUEBLE INTERIOR / INTERIOR OVEN | Lamina / Sheet | |
|---|---|---|---|---|---|
| C-3036 | Iban R. | 03-2016 | HORNOS AE; ACE; APE-202 | 3 | Fagor Industrial S.Coop. FAGOR Oñate |

| MOD. | HORNOS / OVEN | ZONA / ZONE | MUEBLE INTERIOR / INTERIOR OVEN | PLANO DIAGRAM | C-3036 |
|---|---|---|---|---|---|

| ITEM | CODIGO REFERENCE | DENOMINACION | DENOMINATION | ACE-202 | AE-202 | APE-202 | | | | | RECOMEND. | ELIMINADO ELIMINATED | INTRODUCID. INTRODUCED | NOTAS |
|---|---|---|---|---|---|---|---|---|---|---|---|---|---|---|
| 1 | 12025161 | E.V. 230VAC 50/60Hz 1V | SOLENOID VALVE 230VAC 1 W | 1 | | 1 | | | | | X | | | |
| 2 | 12023794 | E.V. 230VAC 50/60Hz 2V | SOLENOID VALVE 230VAC 2 W | 1 | 1 | _ | | | | | X | | 01,01,16 | |
| 2 | 12115418 | E.V. 230VAC 50/60Hz 3V | SOLENOID VALVE 230VAC 3 W | _ | 1 | 1 | | | | | X | | | |
| 5 | 12041767 | SOPORTE SONDA PINCHO CAMARA | CAMERA PROBE SUPP. PINCHO | 1 | 1 | 1 | | | | | | 14,02,13 | | |
| 6 | 12024464 | MARCO LAMPARA | LAMP ANCHORING PLATEN | 2 | 2 | 2 | | | | | | | | |
| 6A | 12023532 | JUNTA INTERIOR LAMPARA | LAMP INNER JOINT | 2 | 2 | 2 | | | | | | | | |
| 6B | 12023668 | CRISTAL LAMPARA | LAMP GLASS | 2 | 2 | 2 | | | | | | | | |
| 6C | 12023578 | JUNTA EXTERIOR LAMPARA | LAMP OUTER JOINT | 2 | 2 | 2 | | | | | | | | |
| 6D | 12024545 | PORTALAMPARAS | LAMP HOLDER | 2 | 2 | 2 | | | | | | | | |
| 6E | 12025123 | LAMPARA 10W-12V | LIGHT 10W 12V | 2 | 2 | 2 | | | | | | | | |
| 6F | 12010262 | TORNILLO AVELLANADO M4X15 | COUNTERSUNK SCREW M.4x15 | 8 | 8 | 8 | | | | | | | | |
| 7 | 12024458 | FILTRO DESAGÜE Ø70 20/21 | DRAINAGE FILTER Ø70 20/21 | 1 | 1 | 1 | | | | | | 15.09.13 | | |
| 7 | 12095053 | FILTRO DESAGÜE Ø73 | DRAINAGE FILTER Ø73 | 1 | 1 | 1 | | | | | | | 15.09.13 | |
| **8** | **12126827** | **SOPORTE CORE HOLDER** | **CORE HOLDER SUPPORT** | **1** | **1** | **1** | | | | | | | | |
| 9 | 12039490 | TOPE BANDEJAS 101-102 | TRAY TOP 101-102 | 4 | _ | _ | | | | | | | | |
| **10** | **12126826** | **PORTABANDEJAS IZDA ACE 202** | **ACE 202 HOLDER LEFT** | **1** | _ | _ | | | | | | | | |
| **10** | **12126824** | **PORTABANDEJAS DCHA ACE 202** | **ACE 202 HOLDER RIGHT** | **1** | _ | _ | | | | | | | | |
| 11 | 12023935 | PUNTA DIFUSORA LAVADO | WASHING DISPENSER POINT | _ | _ | 1 | | | | | | | | |
| 11 | 12129275 | PUNTA DIFUSORA ACLARADO | RINSING DISPENSER POINT | 1 | 1 | _ | | | | | | | 01,01,16 | |
| **12** | **12126838** | **CUBREVENTILADOR 202** | **FAN COVER 202** | **1** | _ | _ | | | | | | | | |
| **12** | **12126839** | **CUBREVENTILADOR 202** | **FAN COVER 202** | _ | **1** | **1** | | | | | | | | |
| 13 | 12039335 | CHAPA REFUERZO CUBA AG 202 | CUBA REINFOR. PLATE AG 202 | 1 | 1 | 1 | | | | | | | | |
| | 12009868 | ARANDELA PLANA INOX 6MM | WASHER FLAT 6 MM INOX. | 7 | 7 | 7 | | | | | | | | |
| | 12010255 | TORNILLO EXAGONAL M6 INOX. | HEXAGONAL SCREW M6 INOX. | 7 | 7 | 7 | | | | | | | | |
| 14 | 12039363 | RECOGEAGUAS HORNO 202 | SPRING WATER COLLE. 202 | 1 | _ | _ | | | | | | | | |
| 15 | 12048417 | TUBO RECOGEAGUAS 202 | COLLECT WATER PIPE 202 | 1 | _ | _ | | | | | | | | |
| | 12009628 | ABRAZADERA ELAST. 26.7-28.1 | SPRING CLAMP 26.7-28.1 | 2 | _ | _ | | | | | | | | |
| 17 | 12043392 | TUERCA PATA 202 ADVANCE | NUT LEG 202 ADVANCE | 4 | 4 | 4 | | | | | | | | |
| 18 | 12043393 | TORNILLO PATA 202 ADVANCE | SCREW LEG 202 ADVANCE | 4 | 4 | 4 | | | | | | | | |
| 19 | 12095019 | TERMOSTATO_261_NA_51ºC | THERMOSTAT_261_NA_51ºC | 1 | 1 | _ | | | | | X | | 01,01,16 | |
| | | | | | | | | | | | | | | |

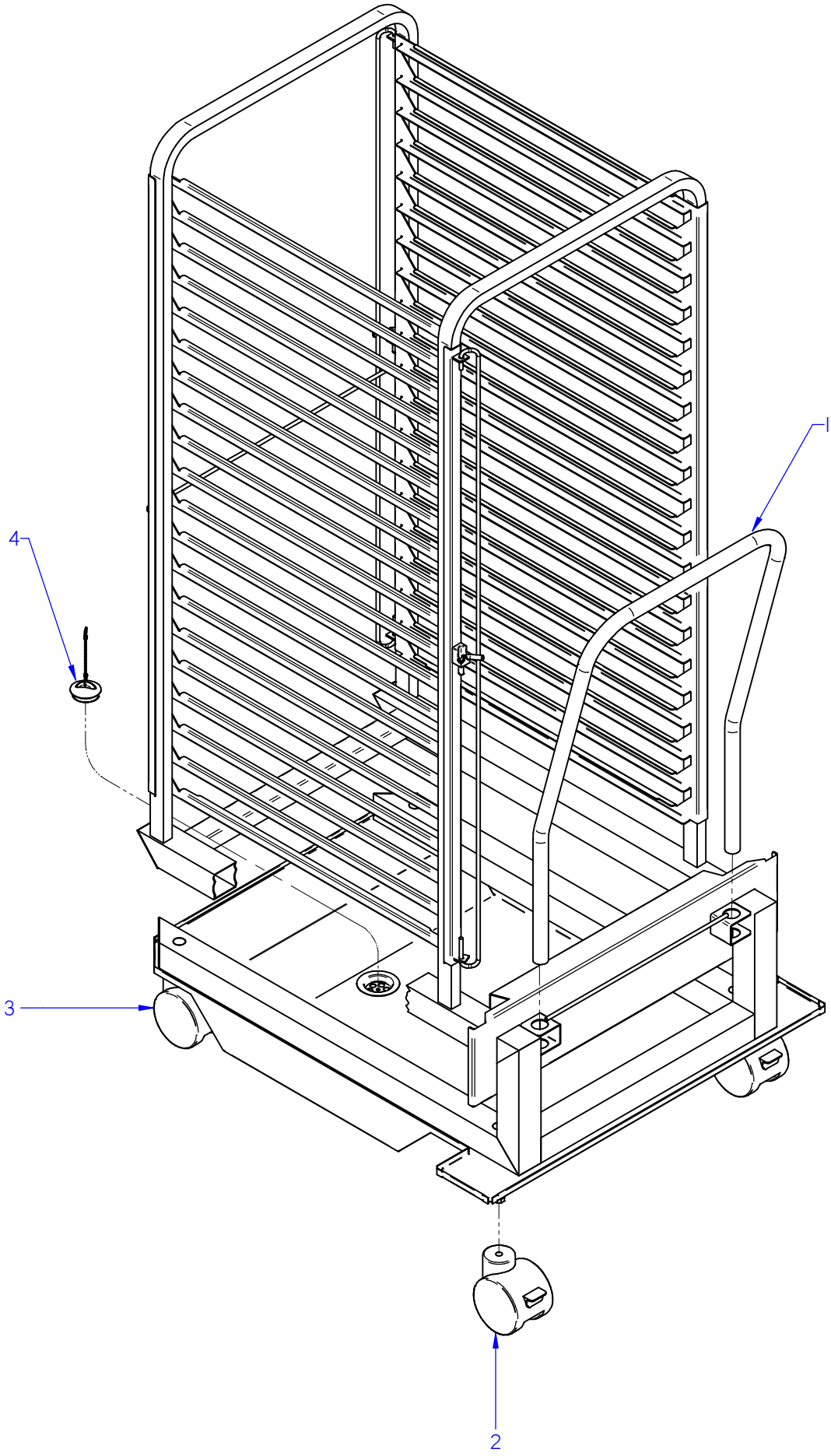


ITEM MARCADO EN COLOR = REPUESTO RECOMENDADO
COLOURED ITEM = RECOMMENDED SPARE PART

| Nº plano / N º plane | Firma | Fecha / Date | Denominación / Denomination: CARRO / TROLLEY | Lamina / Sheet | |
|---|---|---|---|---|---|
| C-3037 | | 2012-07 | HORNOS AE; ACE; APE-202 | 4 | Fagor Industrial S.Coop. FAGOR Oñate |

| MOD. | HORNOS / OVEN | ZONA / ZONE | CARRO / TROLLEY | PLANO DIAGRAM | C-3037 |
|---|---|---|---|---|---|

| ITEM | CODIGO REFERENCE | DENOMINACION | DENOMINATION | AE-202 | APE-202 | | | | | | RECOMEND. | ELIMINADO ELIMINATED | INTRODUCID. INTRODUCED | NOTAS |
|---|---|---|---|---|---|---|---|---|---|---|---|---|---|---|
| | **12044215** | **CARRO 202 ADVANCE** | **TROLLEY 202 ADVANCE** | **1** | **1** | | | | | | | | | |
| 1 | 12044227 | ASA COMPLETA CARRO 202 ADV | HANDLE FULL 202 ADV | 1 | 1 | | | | | | | | | |
| 2 | 12045349 | RUEDA GIRATORIA CON FRENO | SWIVEL WHEEL WITH BRAKE | 2 | 2 | | | | | | | | | |
| 3 | 12045315 | RUEDA GIRATORIA SIN FRENO | SWIVEL WHEEL WITHOUT BR. | 2 | 2 | | | | | | | | | |
| 4 | 12024275 | TAPON Ø44 | CAP Ø44 | 1 | 1 | | | | | | | | | |

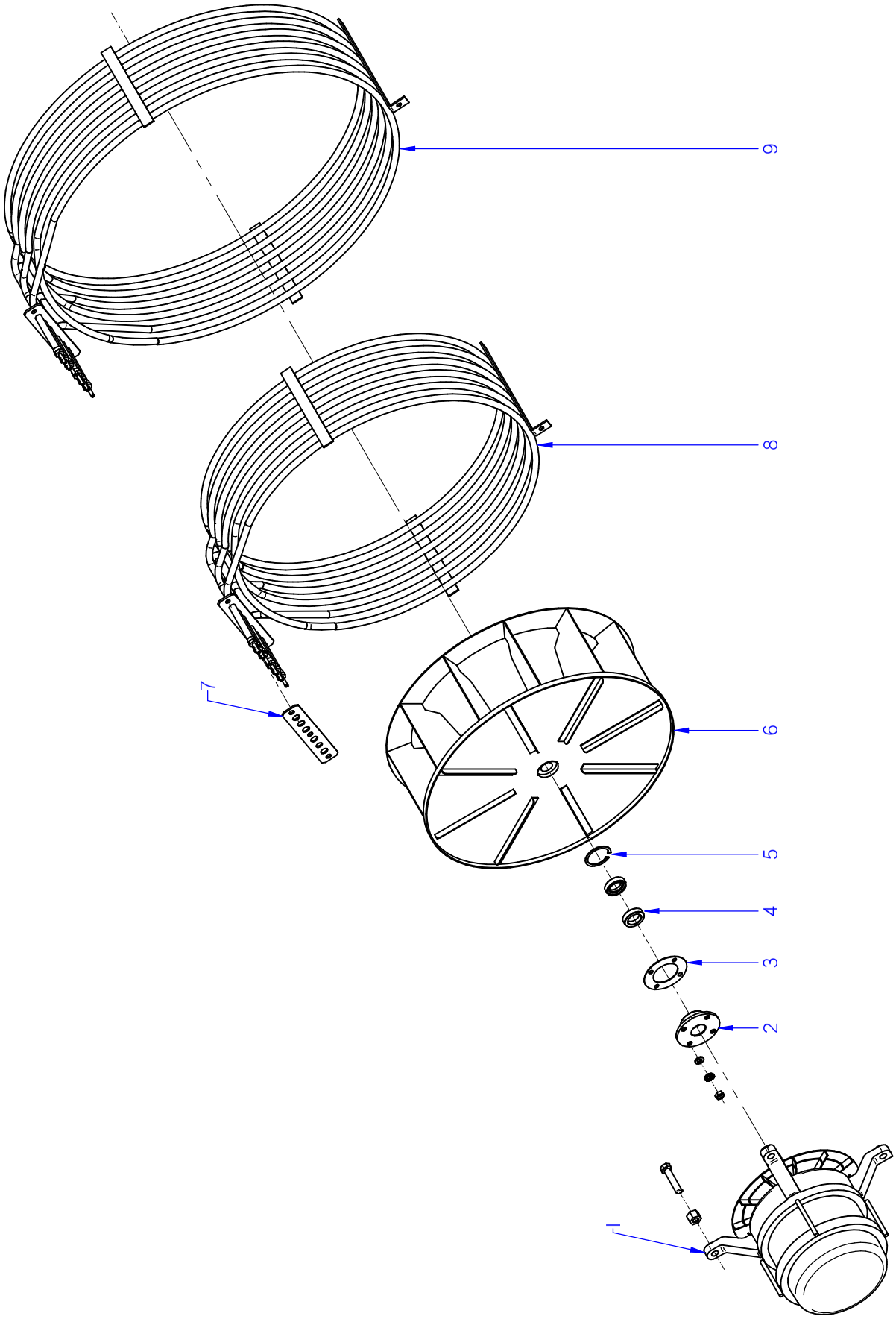


ITEM MARCADO EN COLOR = REPUESTO RECOMENDADO
COLOURED ITEM = RECOMMENDED SPARE PART

| Nº plano / N º plane | Firma | Fecha / Date | Denominación / Denomination: TURBINA / TURBINE | Lamina / Sheet | |
|---|---|---|---|---|---|
| C-3038 | | 2012-07 | HORNOS AE; ACE; APE-202 | 5 | Fagor Industrial S.Coop. FAGOR Oñate |

| MOD. | HORNOS / OVEN | ZONA / ZONE | TURBINA / TURBINE | PLANO DIAGRAM | C-3038 |
|---|---|---|---|---|---|

| ITEM | CODIGO REFERENCE | DENOMINACION | DENOMINATION | ACE-202 | AE-202 | APE-202 | | | | | RECOMEND. | ELIMINADO ELIMINATED | INTRODUCID. INTRODUCED | NOTAS |
|---|---|---|---|---|---|---|---|---|---|---|---|---|---|---|
| 1 | 12024325 | MOTOR 230V AC 3N650KW 1450RPM | MOTOR 230V AC 3N650KW 1450 | 2 | 2 | 2 | | | | | X | | | |
| S/Nº | 12023560 | DISTANCIADOR MOTOR 10/21 | SPACER MOTOR 10/21 | 8 | 8 | 8 | | | | | | | | |
| 2 | 12024742 | CASQUILLO RETEN 10/21 | SEAL BUSHING 10/21 | 2 | 2 | 2 | | | | | | | | |
| 3 | 12024221 | JUNTA CASQUILLO RETEN | SEAL BUSHING GASKET | 2 | 2 | 2 | | | | | | | | |
| 4 | 12024510 | RETEN 17X28X7V | RETAINER 28x17x7 | 4 | 4 | 4 | | | | | X | | | |
| 5 | 12010122 | ANILLO DE SEGURIDAD Ø 28X1.2 | SAFETY RING 28x1,2 | 2 | 2 | 2 | | | | | X | | | |
| 6 | 12024306 | TURBINA RECTA Ø350X127 HANN. | TURBINE RECTA Ø350X127 HAN | 2 | 2 | 2 | | | | | X | | | |
| 7 | 12023679 | JUNTA RESISTENCIA | RESISTANCE SEAL | 4 | 4 | 4 | | | | | | | | |
| 8 | 12024349 | RESISTENCIA INTERIOR 3 X 5KW | INSIDE RESISTANCE 3 X 5KW | 2 | 2 | 2 | | | | | X | | | |
| 9 | 12024359 | RESISTENCIA EXTERIOR 3 X 5KW | EXTERNAL RESISTANCE 3 X 5KW | 2 | 2 | 2 | | | | | X | | | |

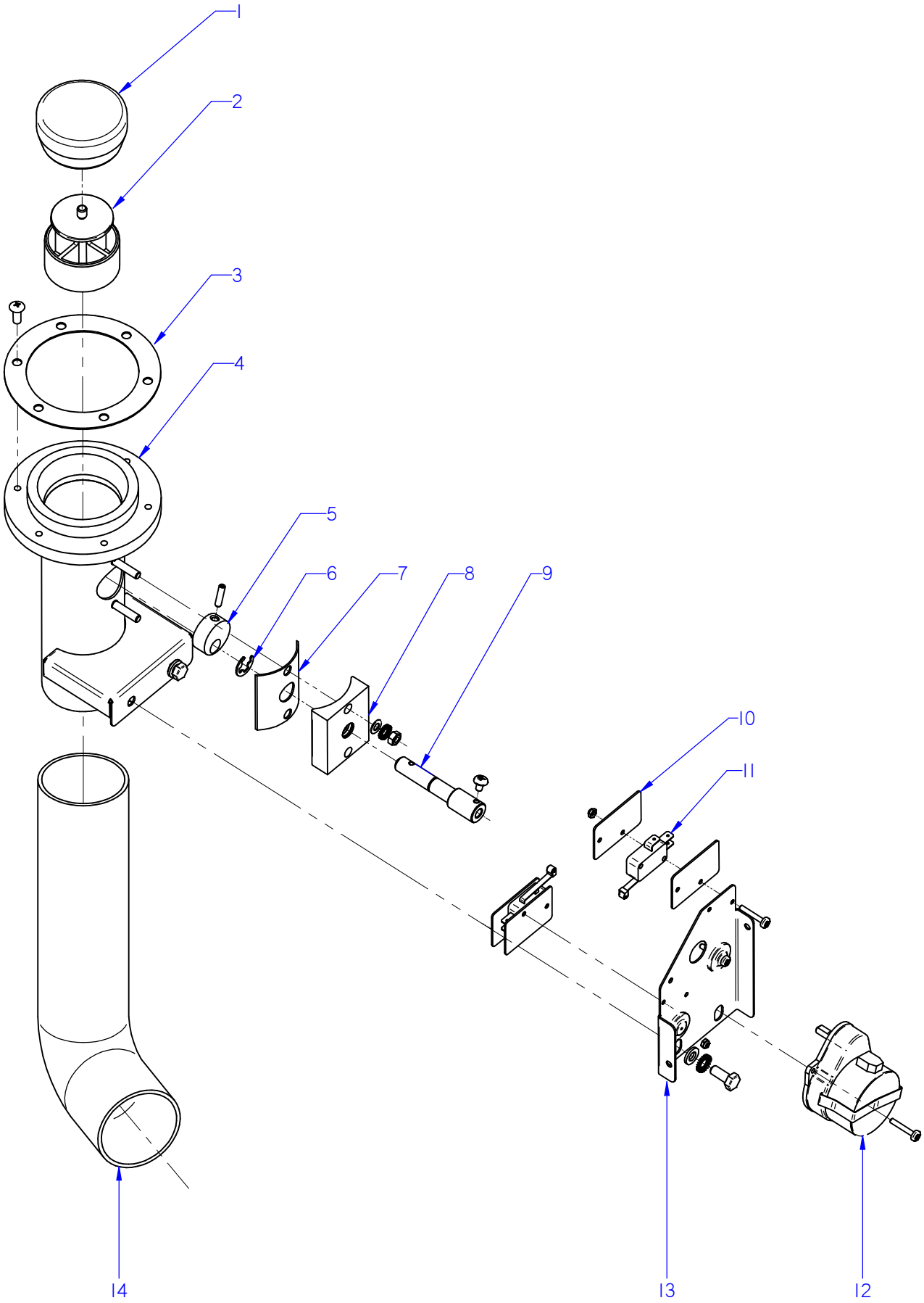


ITEM MARCADO EN COLOR = REPUESTO RECOMENDADO
COLOURED ITEM = RECOMMENDED SPARE PART

| Nº plano / N º plane | Firma | Fecha / Date | Denominación / Denomination: CHIMENEA / FLUEPIPE | Lamina / Sheet | |
|---|---|---|---|---|---|
| C-3039 | | 2012-07 | HORNOS AE; ACE; APE 202 | 6 | Fagor Industrial S.Coop. Oñate |

| MOD. | HORNOS / OVEN | ZONA / ZONE | CHIMENEA / FLUEPIPE | PLANO DIAGRAM | C-3039 |
|---|---|---|---|---|---|

| ITEM | CODIGO REFERENCE | DENOMINACION | DENOMINATION | ACE-202 | AE-202 | APE-202 | | | | | RECOMEND. | ELIMINADO ELIMINATED | INTRODUCID. INTRODUCED | NOTAS |
|---|---|---|---|---|---|---|---|---|---|---|---|---|---|---|
| 1 | 12024520 | RETENCION DE VAPORES | CLOSE CHIMNEY | 1 | 1 | 1 | | | | | | | | |
| 2 | 12024500 | GUIA RETENCION VAPORES | STEAM RETAINER GUIDE | 1 | 1 | 1 | | | | | | | | |
| 3 | 12023576 | JUNTA BASE CHIMENEA | FLUEPIPE BASE SEAL | 1 | 1 | 1 | | | | | | | | |
| S/Nº | 12095516 | JUNTA TORICA 5x1 | O-RING 5x1 | 6 | 6 | 6 | | | | | | | 17.10.13 | |
| 4 | 12022868 | CONJUNTO CHIMENEA | COMPLETE CHIMNEY | 1 | 1 | 1 | | | | | | 01.05.14 | | |
| 4 | 12104226 | CONJUNTO CHIMENEA | COMPLETE CHIMNEY | 1 | 1 | 1 | | | | | | | 01.05.14 | |
| 5 | 12024328 | LEVA EJE CHIMENEA | FLUEPIPE SHAFT CAM | 1 | 1 | 1 | | | | | | | | |
| 6 | 12010014 | ARANDELA DE SEGURIDAD Ø8 | SAFETY WASHER Ø8 | 1 | 1 | 1 | | | | | | | | |
| 7 | 12023497 | JUNTA EJE CHIMENEA | FLUEPIPE SHAFT SEAL | 1 | 1 | 1 | | | | | | | | |
| 8 | 12024436 | GUIA EJE CHIMENEA | FLUEPIPE SHAFT GUIDE | 1 | 1 | 1 | | | | | | 01.05.14 | | |
| 8 | 12098396 | GUIA EJE CHIMENEA | FLUEPIPE SHAFT GUIDE | 1 | 1 | 1 | | | | | | | 01.05.14 | |
| S/Nº | 12010274 | JUNTA TORICA 9.19x2.62 | O-RING 9.19x2.62 | 1 | 1 | 1 | | | | | | | 01.03.13 | |
| 9 | 12024435 | EJE CHIMENEA ELECTRICA | ELECTRIC FLUEPIPE SHAFT | 1 | 1 | 1 | | | | | | 01.05.14 | | |
| 9 | 12104228 | EJE CHIMENEA ELECTRICA | ELECTRIC FLUEPIPE SHAFT | 1 | 1 | 1 | | | | | | | 01.05.14 | |
| 10 | 12009985 | PLACA SEPARADORA | SPACER PLATE | 4 | 4 | 4 | | | | | | | | |
| 11 | 12025193 | INTERRUPTOR PUERTA | DOOR SWITCH | 2 | 2 | 2 | | | | | X | | | |
| 12 | 12024638 | MOTOR CHIMENEA | FLUEPIPE MOTOR | 1 | 1 | 1 | | | | | X | | | |
| 13 | 12022146 | ESCUA. AMARRE MOTOR CHIMEN. | FLUEPIPE MOTOR FASTENING BRAC | 1 | 1 | 1 | | | | | | | | |
| 14 | 12024122 | TUBO FLEXIBLE Ø53X360 | FLEXIBLE TUBE Ø53X360 | 1 | 1 | 1 | | | | | X | | | |
| | 12009962 | ABRAZADERA 40*60 | CLAMP 40*60 | 2 | 2 | 2 | | | | | | | | |

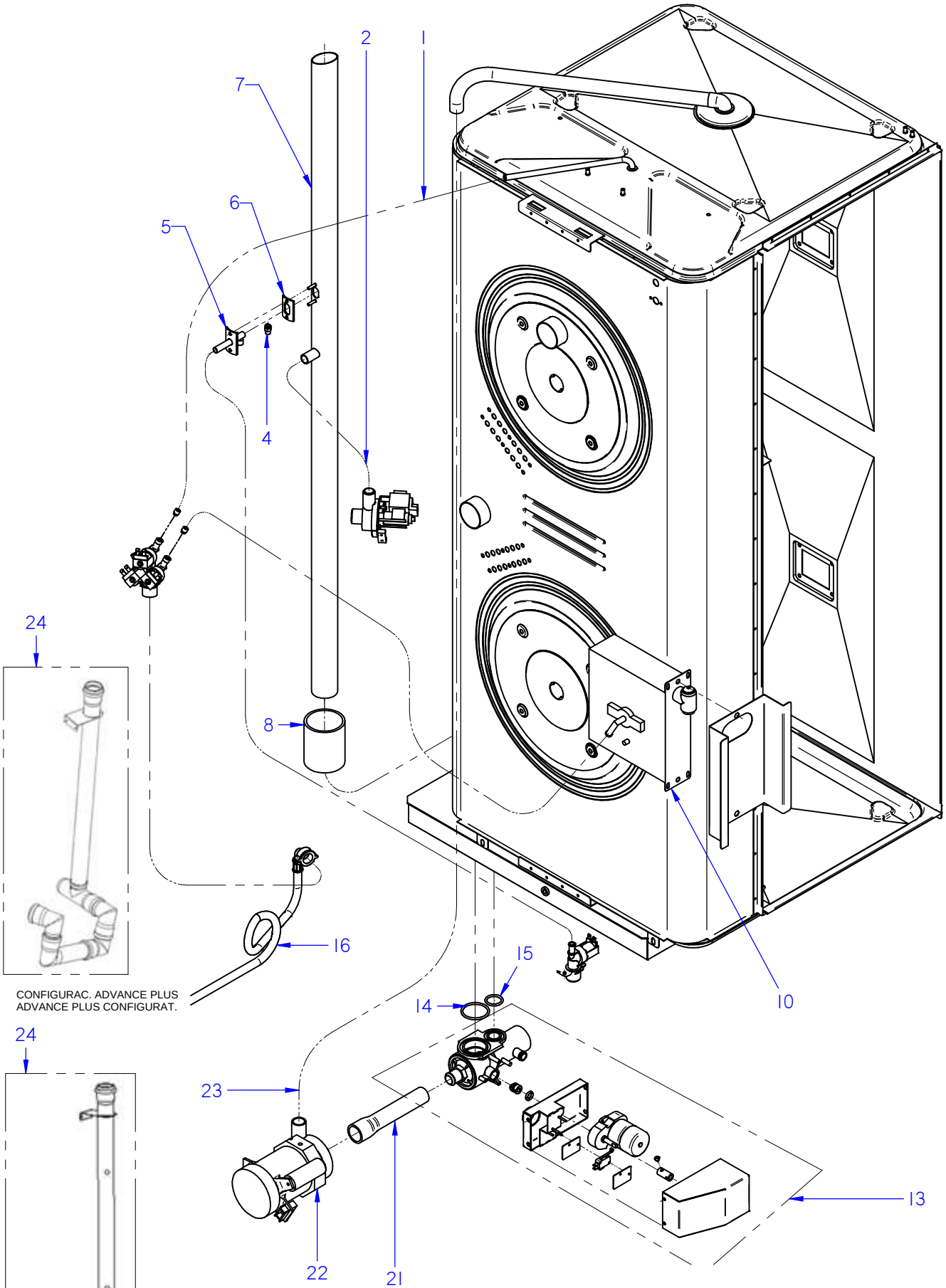


CONFIGURAC. ADVANCE PLUS
ADVANCE PLUS CONFIGURAT.

CONFIGURAC. ADVANCE / CONCEPT
ADVANCE / CONCEPT CONFIGURAT.

ITEM MARCADO EN COLOR = REPUESTO RECOMENDADO
COLOURED ITEM = RECOMMENDED SPARE PART

| Nº plano / N º plane | Firma | Fecha / Date | Denominación / Denomination: CONDUCCIONES DE AGUA / WATER PIPES | Lamina / Sheet | |
|---|---|---|---|---|---|
| C-3040 | Iban R. | 03-2016 | HORNOS AE; ACE; APE-202 | 7 | Fagor Industrial S.Coop. FAGOR Oñate |

| MOD. | HORNOS / OVEN | ZONA / ZONE | CONDUCCIONES DE AGUA / WATER PIPES | PLANO DIAGRAM | C-3040 |
|---|---|---|---|---|---|

| ITEM | CODIGO REFERENCE | DENOMINACION | DENOMINATION | ACE-202 | AE-202 | APE-202 | | | | | RECOMEND. | ELIMINADO ELIMINATED | INTRODUCID. INTRODUCED | NOTAS |
|---|---|---|---|---|---|---|---|---|---|---|---|---|---|---|
| 1 | 11000083 | T. GOMA NEGRA Ø17*10 | BLACK RUBBER PIPE Ø17*10 | 3 | 3 | 3 | | | | | | | | |
| | 12010036 | ABRAZADERA 12*20 | CLAMP 12-20 | 6 | 10 | 8 | | | | | | | | |
| 2 | 11000157 | TUBO SILIC. ALTA Tª D26*18 | HIGH TEMP. SILIC. HOSE D26*18 | _ | 2 | 2 | | | | | | | | |
| | 12009628 | ABRAZAD. ELASTICA 26,7*28,1 | ELAST. CLAMP 26,7*28,1 | _ | 1 | 1 | | | | | | | | |
| 4 | 12024000 | TOBERA 1/8 | NOZZLE 1/8 | 1 | 1 | 1 | | | | | | 31.03.13 | | |
| 4 | 12049131 | BOQUILLA 1/8M-B-1-3 | INJECTOR 1/8M-B-1-3 | 1 | 1 | 1 | | | | | | | 31.03.13 | |
| 5 | 12039468 | CONDUCC. VAHOS COMPLETO | COMPLETE VAPOUR DUCT | 1 | 1 | 1 | | | | | | | | |
| 6 | 12023605 | JUNTA TUBO INYECTOR | INJECTOR PIPE SEAL | 1 | 1 | 1 | | | | | | | | |
| 7 | 12043809 | CHIMENEA COMPLETA 202 ACE | COMPL. FLUEPIPE 202 ACE | 1 | _ | _ | | | | | | | | |
| 7 | 12041844 | CHIMENEA COMPLETA 202 ADV | COMPLET FLUEPIPE 202 ADV | _ | 1 | 1 | | | | | | | | |
| 8 | 12023982 | TUBO EMPALME GENERADOR | SPLICE TUBE GENERATOR | 1 | 1 | 1 | | | | | | | | |
| | 12009914 | ABRAZADERA 70-90 | CLAMP 70-90 | 2 | 2 | 2 | | | | | | | | |
| 10 | 12040977 | DUCHA | SHOWER | _ | 1 | 1 | | | | | | | | |
| **13** | **12126816** | **KIT VALVULA DESAGUE ADVAN.** | **VALVE DRAIN ADVANCE KIT** | _ | _ | **1** | | | | | X | | **12.07.13** | |
| 14 | 12010081 | JUNTA TORICA Ø52X3,5 | O-RING Ø52X3.5 | _ | _ | 1 | | | | | | | | |
| 15 | 12010131 | JUNTA TORICA Ø33x3,5 | O-RING Ø33x3.5 | _ | _ | 1 | | | | | | | | |
| 16 | 12025198 | MANGUERA ENTRADA AGUA | WATER INLET HOSE | 1 | 1 | 1 | | | | | | | | |
| 21 | 12024425 | GOMA VALVULA BOMBA | PUMP VALVE RUBBER | _ | _ | 1 | | | | | | | | |
| | 12010023 | ABRAZADERA 20-32 | CLAMP 20-32 | _ | _ | 1 | | | | | | | | |
| | 12009997 | ABRAZADERA 25-40 | CLAMP 25-40 | _ | _ | 1 | | | | | | | | |
| 22 | 12024782 | MOTOBOMBA 230V AC 1N 50Hz | MOTOR 230V AC 1N 50Hz 74,6 | _ | _ | 1 | | | | | X | | | |
| S/Nº | 12024463 | CONDENSADOR ELEC. 250V VDE | CONDENSER ELEC. 250V VDE | 1 | 1 | 1 | | | | | | | | |
| 23 | 11000005 | TUBO SILIC. ALTA Tª D31*23 | HIGH TEMP. SILIC. HOSE D31*23 | _ | _ | 2 | | | | | | | | |
| 24 | 12047404 | MOD CONJUNTO DESAGUE ADV | ADV DRAIN SET MODEL | 1 | 1 | 1 | | | | | | | | |
| | | | | | | | | | | | | | | |
| | | | | | | | | | | | | | | |
| | | | | | | | | | | | | | | |
| | | | | | | | | | | | | | | |
| | | | | | | | | | | | | | | |
| | | | | | | | | | | | | | | |
| | | | | | | | | | | | | | | |

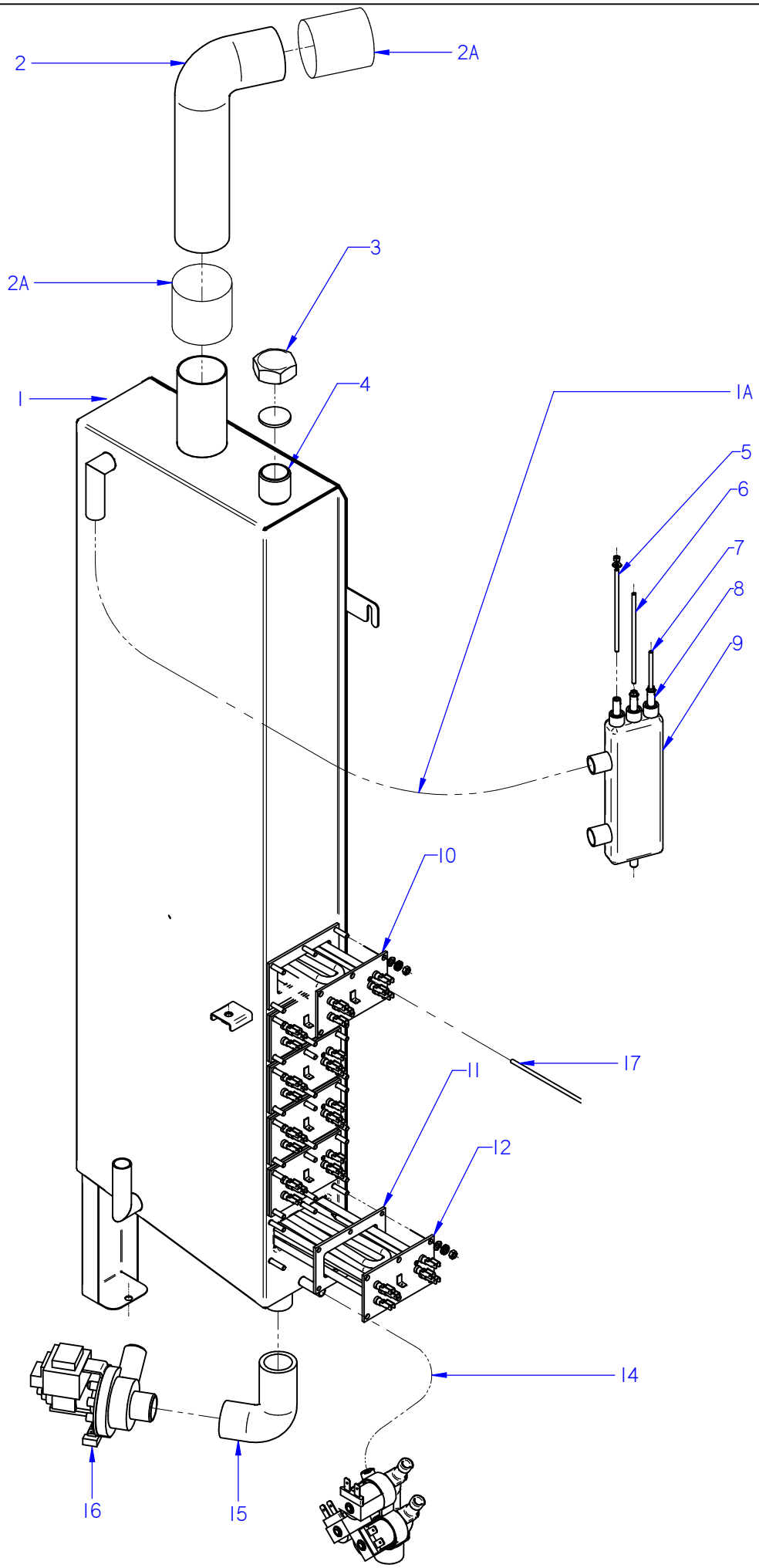


ITEM MARCADO EN COLOR = REPUESTO RECOMENDADO
COLOURED ITEM = RECOMMENDED SPARE PART

| Nº plano / N º plane | Firma | Fecha / Date | Denominación / Denomination: CIRCUITO DE VAPOR / STEAM CIRCUIT | Lamina / Sheet | |
|---|---|---|---|---|---|
| C-3041 | | 03-2016 | HORNOS AE-202; APE-202 | 8 | Fagor Industrial S.Coop. FAGOR Oñate |

| MOD. | HORNOS / OVEN | ZONA / ZONE | CIRCUITO DE VAPOR / STEAM CIRCUIT | PLANO DIAGRAM | C-3041 |
|---|---|---|---|---|---|

| ITEM | CODIGO REFERENCE | DENOMINACION | DENOMINATION | AE-202 | APE-202 | | | | | | RECOMEND. | ELIMINADO ELIMINATED | INTRODUCID. INTRODUCED | NOTAS |
|---|---|---|---|---|---|---|---|---|---|---|---|---|---|---|
| **1** | **12046064** | **KIT GENERADOR VAPOR 202** | **STEAM GENERATOR 202 KIT** | **1** | **1** | | | | | | X | | | |
| 1A | 11000157 | TUBO SILICONA Tº Ø 26*18 | HIGH SILICON PIPE Tº Ø 26*18 | 3 | 3 | | | | | | | | | |
| | 12009628 | ABRAZADERA ELASTICA 26,7*28,1 | ELAST. CLAMP 26,7*28,1 | 6 | 6 | | | | | | | | | |
| 2 | 12041855 | TUBO FLEXIBLE Ø53X360 VARILLA | FLEXIBLE TUBE Ø53X360 | 1 | 1 | | | | | | | 01.10.14 | | |
| 2 | 12047930 | EMPALME GENERADOR 061 | GENERATOR JOINT 601 | 1 | 1 | | | | | | | | 01.10.14 | |
| 2A | 12047901 | EMPALME SILICONA Ø53 | SILICONE JOINT Ø53 | 2 | 2 | | | | | | | | 01.10.14 | |
| 3 | 12009699 | TUERCA TAPON 1" | PLUG NUT 1" | 1 | 1 | | | | | | | | | |
| 4 | 12009884 | ARANDELA Ø32 | WASHER Ø32 | 1 | 1 | | | | | | | | | |
| 5 | 12023573 | ELECTRODO ALTO | HIGH LEVEL ELECTRODE | 1 | 1 | | | | | | X | | | |
| 6 | 12023574 | ELECTRODO BAJO | LOW LEVEL ELECTRODE | 1 | 1 | | | | | | X | | | |
| 7 | 12023575 | ELECTRODO DE MASA | EARTH ELECTRODE | 1 | 1 | | | | | | X | | | |
| 8 | 12024460 | GUIA AISLANTE | INSULATION GUIDE | 3 | 3 | | | | | | | | | |
| 9 | 12024419 | BOTE DE NIVELES | LEVELS VESSEL | 1 | 1 | | | | | | | 02.06.14 | | |
| 9 | 12113061 | BOTE DE NIVELES INOX | LEVELS VESSEL S.STEEL | 1 | 1 | | | | | | | | 02.06.14 | |
| 10 | 12024752 | RESISTENCIA 3x3000W 230V | RESISTOR 3x3000W 230V | 1 | 1 | | | | | | X | | | |
| 11 | 12023680 | JUNTA CIERRE RESISTENCIAS | RESISTOR SEAL | 6 | 6 | | | | | | | | | |
| 12 | 12024747 | RESISTENCIA 3x3000W | RESISTOR 3x3000W | 5 | 5 | | | | | | X | | | |
| 14 | 11000083 | T. GOMA NEGRA Ø17*10 | BLACK RUBBER PIPE Ø17*10 | 1 | 1 | | | | | | | | | |
| 15 | 12039649 | TUBO DESAGÜE GENERADOR | DRAIN TUBE GENERATOR | 1 | 1 | | | | | | | | | |
| 16 | 12039546 | MOTOBOMBA 230V AC 1N 50/60Hz | PUMP 230V AC 50/60Hz 30W 1N | 1 | 1 | | | | | | X | | | |
| 17 | 12023901 | CONJUNTO TERMOPAR VAPOR (Tg) | STEAM THERMOCOUPLE UNIT (Tg) | 1 | 1 | | | | | | X | | | |
| | | | | | | | | | | | | | | |
| | | | | | | | | | | | | | | |
| | | | | | | | | | | | | | | |
| | | | | | | | | | | | | | | |
| | | | | | | | | | | | | | | |
| | | | | | | | | | | | | | | |
| | | | | | | | | | | | | | | |
| | | | | | | | | | | | | | | |
| | | | | | | | | | | | | | | |
| | | | | | | | | | | | | | | |

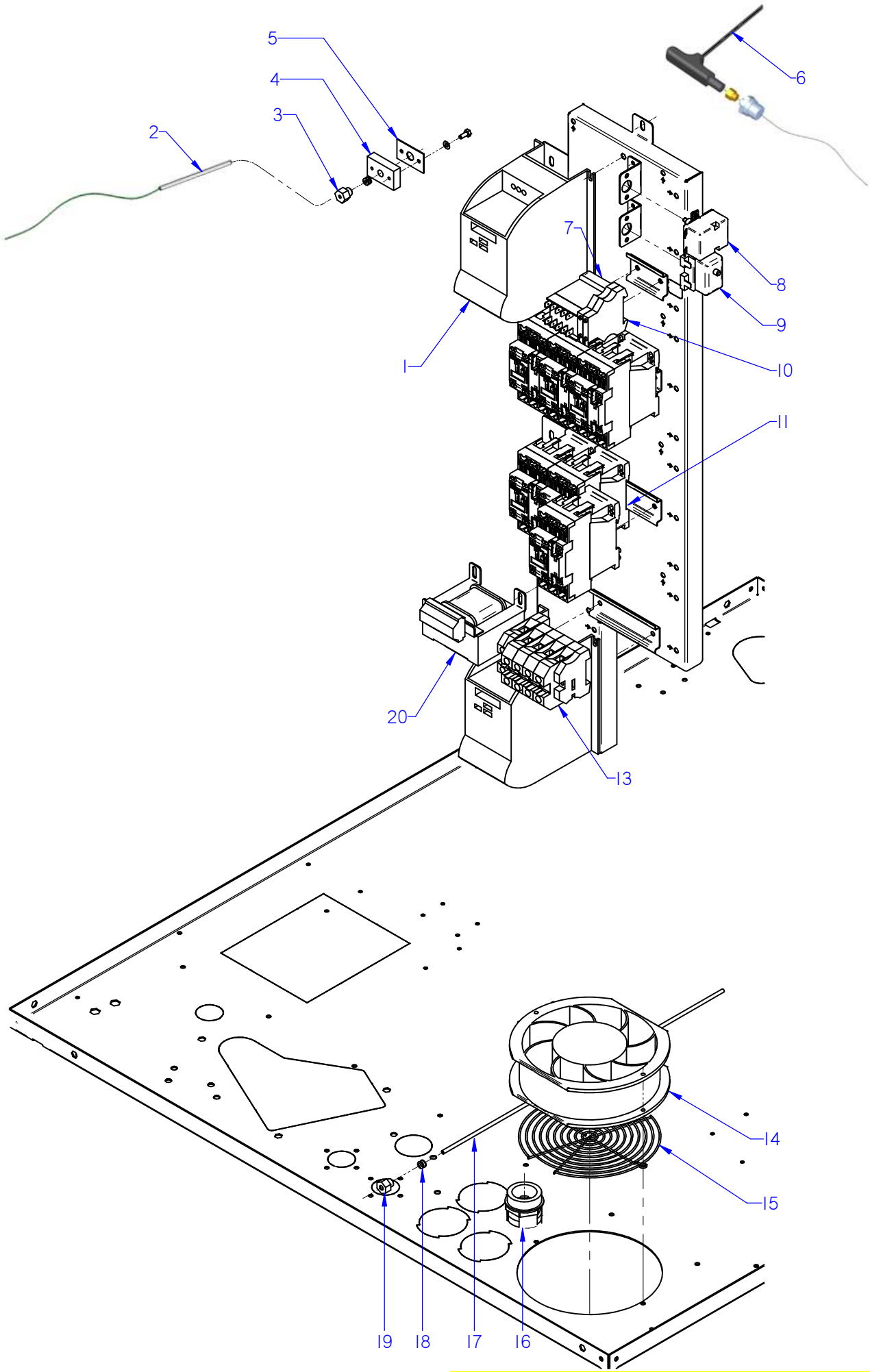


ITEM MARCADO EN COLOR = REPUESTO RECOMENDADO
COLOURED ITEM = RECOMMENDED SPARE PART

| Nº plano / N º plane | Firma | Fecha / Date | Denominación / Denomination: CUADRO ELECTRICO / ELECTRIC PANEL | Lamina / Sheet | |
|---|---|---|---|---|---|
| C-3042 | | 2012-07 | HORNOS AE; ACE; APE-202 | 9 | Fagor Industrial S.Coop. Oñate |

| MOD. | HORNOS / OVEN | ZONA / ZONE | CUADRO ELECTRICO / ELECTRIC PANEL | PLANO DIAGRAM | C-3042 |
|---|---|---|---|---|---|

| ITEM | CODIGO REFERENCE | DENOMINACION | DENOMINATION | ACE-202 | AE-202 | APE-202 | | | | | RECOMEND. | ELIMINADO ELIMINATED | INTRODUCID. INTRODUCED | NOTAS |
|---|---|---|---|---|---|---|---|---|---|---|---|---|---|---|
| 1 | 12048798 | REP VARIADOR REGULADO ADV | REGULATED VARIATOR ADV | 2 | 2 | 2 | | | | | X | | | |
| 2 | 12024642 | CONJUN. TERMOPAR CAMARA (Tn) | CHAM. THERMOCOUPLE UNIT (Tn) | 1 | 1 | 1 | | | | | X | | | |
| 3 | 12023581 | RACORD CIERRE SONDA | PROBE CLOSING ADAPTOR | 1 | 1 | 1 | | | | | | | | |
| S/Nº | 12024247 | BICONO CIERRE SONDA | PROBE CLOSING BICONE | 1 | 1 | 1 | | | | | | | | |
| 4 | 12023737 | BASE CIERRE SONDA | FIXING CORE PROBE | 1 | 1 | 1 | | | | | | | | |
| 5 | 12023504 | JUNTA PASAMUROS SIMPLE | SIMPLE | 1 | 1 | 1 | | | | | | | | |
| 6 | 12039548 | SONDA PINCHO ADVANCE | ADVANCE PROBE PINCHO | 1 | 1 | 1 | | | | | X | | | |
| 7 | 12024011 | CONTACTOR 230 V. 50-60 HZ | 230 V. 50-60 HZ CONTACTOR | 1 | 1 | 1 | | | | | X | | | |
| 8 | 12024591 | TERMOSTATO LIMITADOR 10/21 | LIMITER THERMOSTAT10/21 | 1 | 1 | 1 | | | | | X | | | |
| 9 | 12024884 | TERMOSTATO LIMITADOR CORTE | THERMOSTAT LIMITER | _ | 1 | 1 | | | | | X | | | |
| 10 | 12025158 | BORNAS PORTA FUSIBLES | FUSE HOLDER TERMINAL | 2 | 2 | 2 | | | | | | | | |
| S/Nº | 12024152 | FUSIBLE 10A Ø5MM 20X5 | 10A Ø5MM 20X5 FUSE | 2 | 2 | 2 | | | | | | | | |
| 11 | 12043505 | CONTAC. 230V AC 50/60Hz 50A 3 | CONTAC. 230V AC 50/60Hz 50A 3 | 6 | 6 | 6 | | | | | X | | | |
| 13 | 12024942 | BORNA PASO 192A 70mm2 1vía UL | TERMINAL STEP 192A 70mm2 1v | 3 | 3 | 3 | | | | | | | | |
| | 12024515 | BORNA TIERRA 35MM | EARTH TERMINAL 35mm | 1 | 1 | 1 | | | | | | | | |
| | 12024946 | BORNA NEUTRO AZUL 192A 70 | NEUTRAL TERMINAL BLUE 192A | 1 | 1 | 1 | | | | | | | | |
| | 12025158 | BORNA PORTAFUSIBLES | FUSE HOLDER TERMINAL | 2 | 2 | 2 | | | | | | | | |
| | 12025171 | TOPE FINAL BORNA 35mm2 UL | TOP END TERMINAL 35mm2 UL | 1 | 1 | 1 | | | | | | | | |
| 14 | 12024106 | VENTILADOR 230V AC 1N 50/60Hz 36KV | FAN 230V AC 1N 50/60Hz 36KW | 2 | 2 | 2 | | | | | X | | | |
| 15 | 12024790 | PROTECCI. VENTILADOR RM-155 | FAN PROTECTION RM-155 | 1 | 1 | 1 | | | | | | | | |
| 16 | 12024994 | PRENSA ESTOPAS PG42 | STUFFING BOX PG42 | 1 | 1 | 1 | | | | | | | | |
| | 12025204 | CONTRATUERCA PG42 | COUNTERNUT PG42 | 1 | 1 | 1 | | | | | | | | |
| 17 | 12047675 | CONJUN.TERMOP. VAPOR L625 (Tv) | STEAM THERMOCOUPLE L625 (Tv) | 1 | 1 | _ | | | | | X | | | |
| 17 | 12039678 | CONJUN.TERMOPAR VAPOR Ø4 (Tv) | STEAM THERMOCOUPLE Ø4 (Tv) | _ | _ | 1 | | | | | X | | | |
| 18 | 12043409 | BICONO CIERRE SONDA Ø4 | PROBE CLOSING BICONE Ø4 | 1 | 1 | 1 | | | | | | | | |
| 19 | 12041049 | RACORD CIERRE SONDA Ø 4 | PROBE CLOSING ADAPTOR Ø 4 | 1 | 1 | 1 | | | | | | | | |
| 20 | 12024173 | TRANSFORMADOR 12-0-12-0,24-0 | TRANSFORMER 12-0-12-0,24-0 | 1 | 1 | 1 | | | | | X | | | |
| | | | | | | | | | | | | | | |
| | | | | | | | | | | | | | | |
| | | | | | | | | | | | | | | |
| | | | | | | | | | | | | | | |

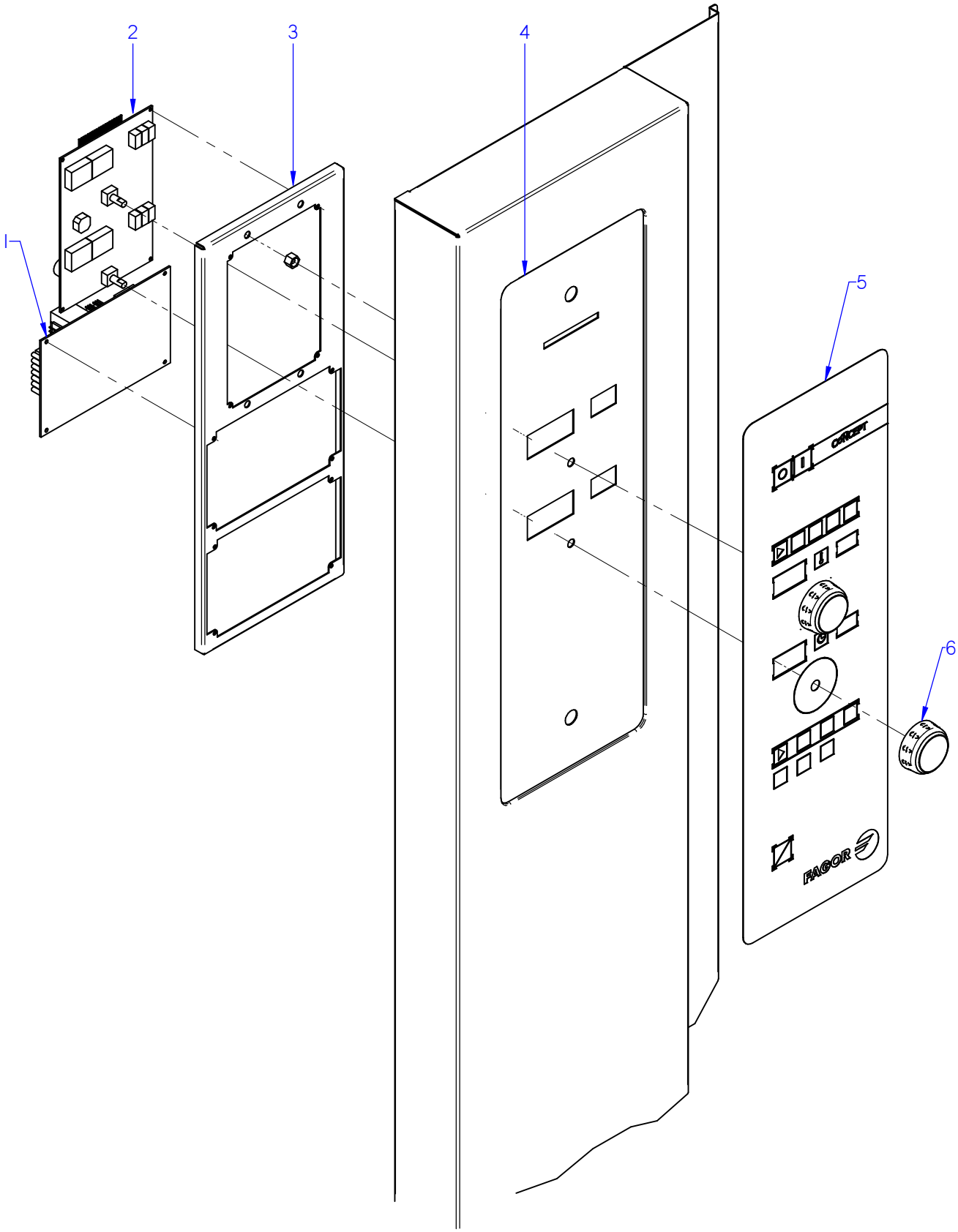


ITEM MARCADO EN COLOR = REPUESTO RECOMENDADO
COLOURED ITEM = RECOMMENDED SPARE PART

| Nº plano / N º plane | Firma | Fecha / Date | Denominación / Denomination: PORTAMANDOS / CONTROL HOLDER | Lamina / Sheet | |
|---|---|---|---|---|---|
| C-3043 | | 2012-07 | HORNOS ACE-202 | 10 | Fagor Industrial S.Coop. FAGOR Oñate |

| MOD. | HORNOS / OVEN | ZONA / ZONE | CONJUNTO ELECTRICO PORTAMANDOS / CONTROL HOLDER ELECTRIC UNIT | PLANO DIAGRAM | C-3043 |
|---|---|---|---|---|---|

| ITEM | CODIGO REFERENCE | DENOMINACION | DENOMINATION | ACE-202 | | | | | | | RECOMEND. | ELIMINADO ELIMINATED | INTRODUCID. INTRODUCED | NOTAS |
|---|---|---|---|---|---|---|---|---|---|---|---|---|---|---|
| 1 | 12046659 | CONTROL TARJETA CAM.12V AC . | CARD CONTROL 12V AC 50/60Hz | 1 | | | | | | | | 01.01.16 | | |
| 1 | 12130672 | TARJETA CAMARA GRAB. LAVADO | RECORD. CHAMBER CARD WASH | 1 | | | | | | | X | | 01.01.16 | Serial N. 8100603816 |
| 2 | 12046671 | VISUALIZADOR 12V AC 50/60Hz 12D | 12V AC 50/60Hz 12D DISPLAY | 1 | | | | | | | | 01.01.16 | | |
| 2 | 12130674 | TARJ. PORTAM. GRABADA LAVADO | REC. COTRL PANEL CARD WASH | 1 | | | | | | | X | | 01.01.16 | Serial N. 8100603816 |
| 3 | 12043668 | SOPORTE PROG. CONCEPT ADV | CIRCUIT SUPPO. CONCEPT AD | 1 | | | | | | | | | | |
| 4 | 12093219 | FRENTE PORTAM. CONCEPT | CONTROL PANEL FRONT CONC. | 1 | | | | | | | | | | |
| S/Nº | 12041815 | JUNTA PORTAMANDOS ADV PLUS | CONTROL PANEL SEAL ADV PLUS | 1 | | | | | | | | | | |
| 5 | 12044109 | SERIGRAFIA CONCEPT ADVANCE E. | SERIGRAPHY CONCEPT ADVAN | 1 | | | | | | | | 01.01.16 | | |
| 5 | 12129318 | SERIGRAFIA ACE-ACG | ACE-ACG SERIGRAPHY | 1 | | | | | | | X | | 01.01.16 | Serial N. 8100603816 |
| 6 | 12046201 | BOTON CONCEPT ADV | CONTROL BUTTON CONC. ADV | 2 | | | | | | | | | | |

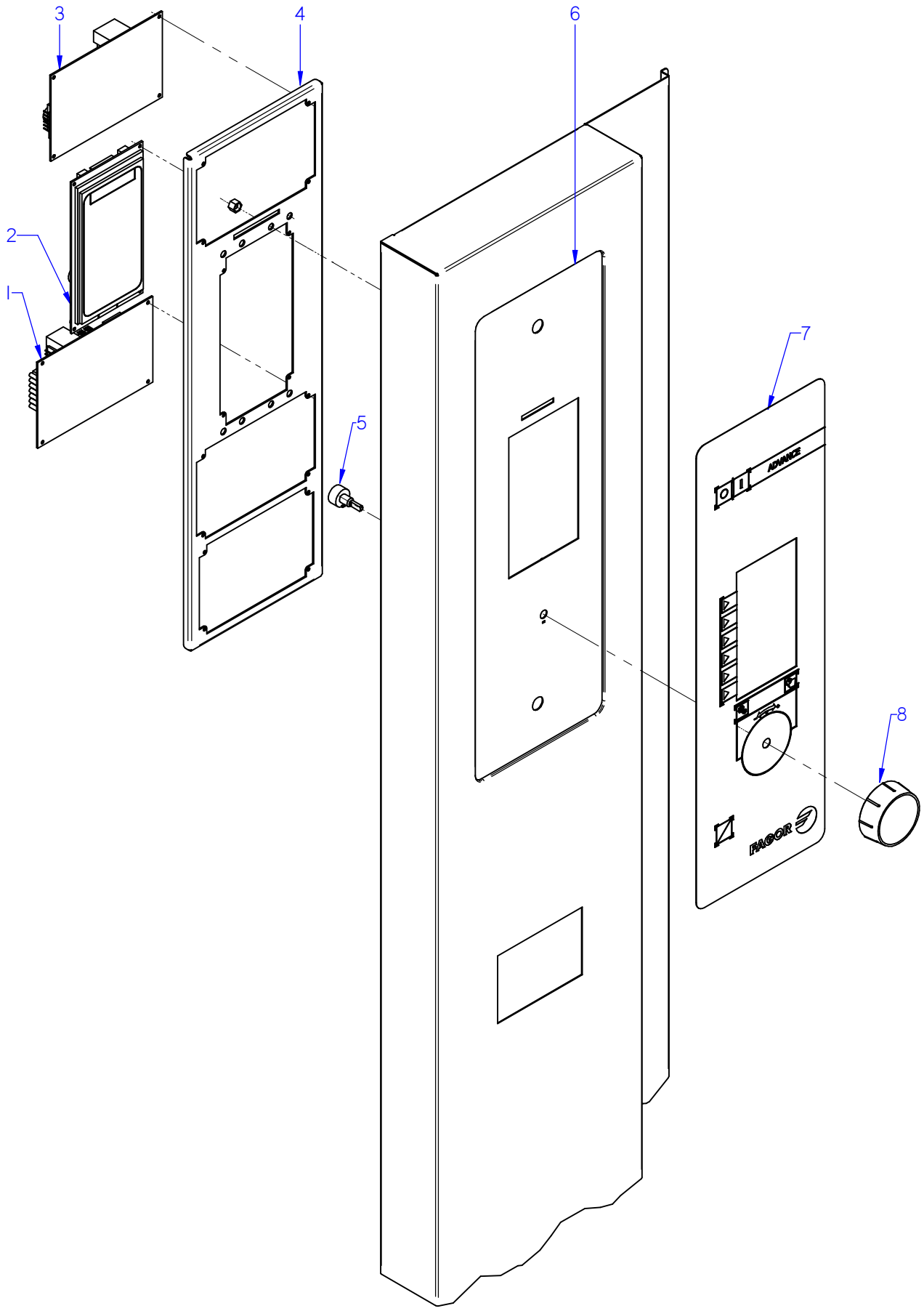


ITEM MARCADO EN COLOR = REPUESTO RECOMENDADO
COLOURED ITEM = RECOMMENDED SPARE PART

| Nº plano / N º plane | Firma | Fecha / Date | Denominación / Denomination: PORTAMANDOS / CONTROL HOLDER | Lamina / Sheet | |
|---|---|---|---|---|---|
| C-3044 | | 2012-07 | HORNOS AE-202 | 11 | Fagor Industrial S.Coop. Oñate FAGOR |

| MOD. | HORNOS / OVEN | ZONA / ZONE | CONJUNTO ELECTRICO PORTAMANDOS / CONTROL HOLDER ELECTRIC UNIT | PLANO DIAGRAM | C-3044 |
|---|---|---|---|---|---|

| ITEM | CODIGO REFERENCE | DENOMINACION | DENOMINATION | AE-202 | | | | | | | RECOMEND. | ELIMINADO ELIMINATED | INTRODUCID. INTRODUCED | NOTAS |
|---|---|---|---|---|---|---|---|---|---|---|---|---|---|---|
| 1 | 12046659 | CONTROL TARJETA CAM.12V AC . | CARD CONTROL 12V AC 50/60Hz | 1 | | | | | | | | 01.01.16 | | |
| 1 | 12130672 | TARJETA CAMARA GRAB. LAVADO | RECORD. CHAMBER CARD WASH | 1 | | | | | | | X | | 01.01.16 | Serial N. 8100608422 |
| 2 | 12046672 | VISUALIZADOR 12V AC 50/60Hz 32 D | 12V AC 50/60Hz 32 D DISPLAY | 1 | | | | | | | | 01.01.16 | | |
| 2 | 12130675 | REP PORTAM. ADVANCE LAVADO | RECORD. C. PANEL CARD WASH | 1 | | | | | | | X | | 01.01.16 | Serial N. 8100608422 |
| 3 | 12046670 | CONTROL TARJETA CALD. 12V AC 50/6 | CARD CONTROL 12V AC 50/60Hz | 1 | | | | | | | X | | | |
| 4 | 12039536 | SOPORTE CIRCUITOS ADVANCE | CIRCUIT SUPPORT ADVANCE | 1 | | | | | | | | | | |
| 5 | 12043405 | ENCODER GAMA ADVANCE | ADVANCE RANGE ENCODER | 1 | | | | | | | X | | | |
| 6 | 12093236 | FRENTE PORTAM. AE-AG COMP. | CONTROL PANEL FRONT AE-AG | 1 | | | | | | | | | | |
| S/Nº | 12041815 | JUNTA PORTAMANDOS ADV PLUS | CONTROL PANEL SEAL ADV PLUS | 1 | | | | | | | | | | |
| 7 | 12044139 | SERIGRAFIA ADVANCE | ADVANCE SERIGRAPHY | 1 | | | | | | | | 01.01.16 | | |
| 7 | 12129465 | SERIGRAFIA ADVANCE LAVADO | ADVANCE SERIGRAPHY WASHING | 1 | | | | | | | X | | 01.01.16 | Serial N. 8100608422 |
| 8 | 12044074 | BOTON DE MANDO ADV | ADV CONTROL BUTTON | 1 | | | | | | | | | | |

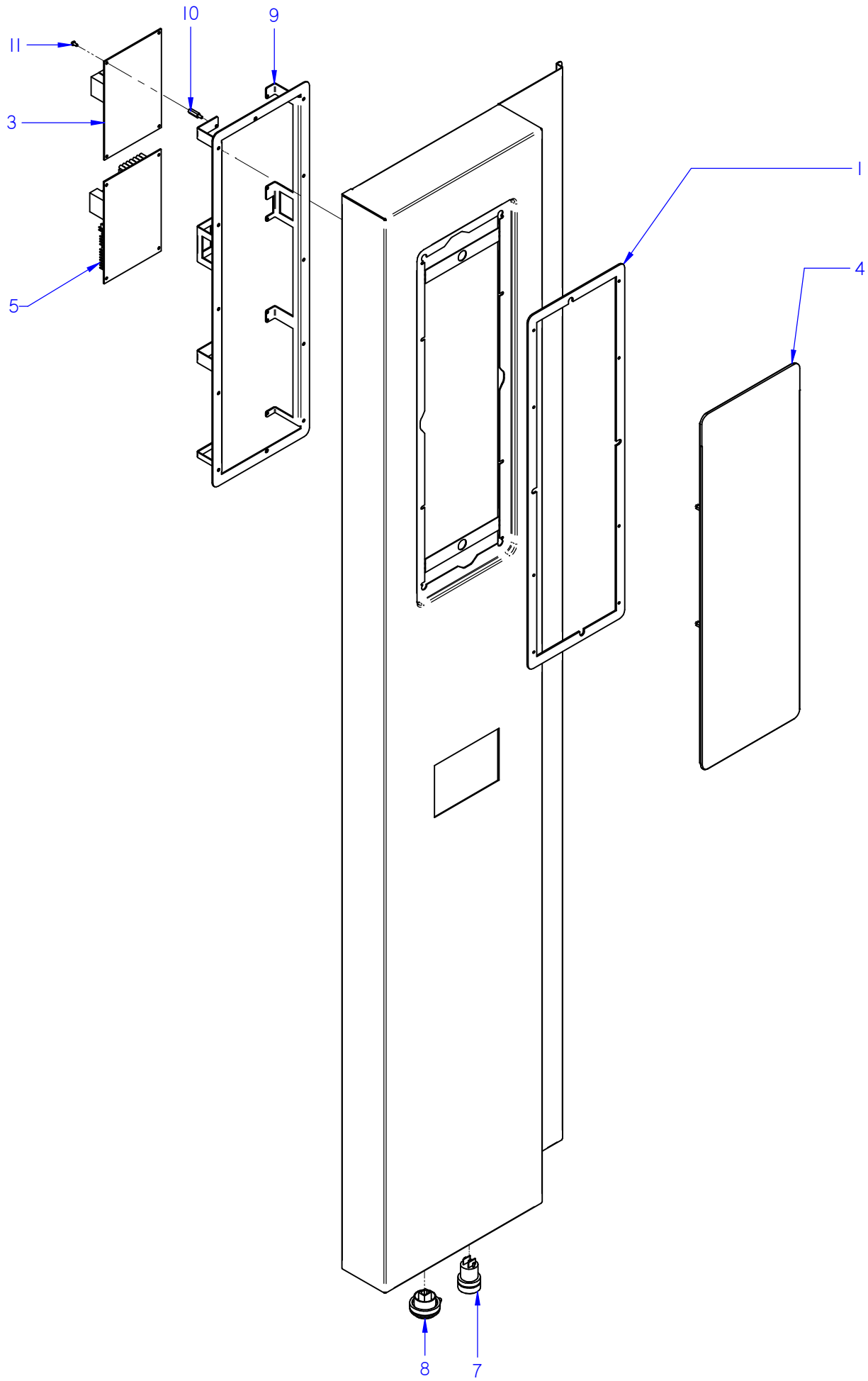


ITEM MARCADO EN COLOR = REPUESTO RECOMENDADO
COLOURED ITEM = RECOMMENDED SPARE PART

| Nº plano / N º plane | Firma | Fecha / Date | Denominación / Denomination: PORTAMANDOS / CONTROL HOLDER | Lamina / Sheet | |
|---|---|---|---|---|---|
| C-3045 | | 05-2015 | HORNOS APE-202 | 12 | Fagor Industrial S.Coop. FAGOR Oñate |

| MOD. | HORNOS / OVEN | ZONA / ZONE | CONJUNTO ELECTRICO PORTAMANDOS / CONTROL HOLDER ELECTRIC UNIT | PLANO DIAGRAM | C-3045 |
|---|---|---|---|---|---|

| ITEM | CODIGO REFERENCE | DENOMINACION | DENOMINATION | APE-202 | | | | | | | RECOMEND. | ELIMINADO ELIMINATED | INTRODUCID. INTRODUCED | NOTAS |
|---|---|---|---|---|---|---|---|---|---|---|---|---|---|---|
| 1 | 12041815 | JUNTA PORTAMANDOS ADV PLUS | CONTROL PANEL SEAL ADV PLUS | 1 | | | | | | | X | | | |
| | 12010289 | TUERCA AUTOB. M3 DIN985 | SELF-LOCK NUT M3 DIN985 | 6 | | | | | | | | | | |
| | 12010288 | CLIP SUJECIÓN RÁPIDA Ø 4 | RAPID CONNECT CLIP Ø 4 | 12 | | | | | | | | | | |
| 3 | 12046670 | CONTROL TARJETA CALD. 12V AC 50/6 | CARD CONTROL 12V AC 50/60Hz | 1 | | | | | | | X | | | |
| 4 | 12046579 | PLAT ADV PLUS CON SOFTWARE | ADV PLUS SOFTWARE PLATF. | 1 | | | | | | | | 25.05.15 | | |
| 4 | 12121349 | PLAT ADV PLUS CON SOFTWARE | ADV PLUS SOFTWARE PLATF. | 1 | | | | | | | X | | 25.05.15 | |
| 5 | 12046659 | CONTROL TARJETA CAM.12V AC . | CARD CONTROL 12V AC 50/60Hz | 1 | | | | | | | | 01.01.16 | | |
| 5 | 12130672 | TARJETA CAMARA GRAB. LAVADO | RECORD. CHAMBER CARD WASH | 1 | | | | | | | X | | 01.01.16 | Serial N. 8100608593 |
| 7 | 12023927 | PULSADOR SERIE MICRO | MICRO SWITCH SERIES | 1 | | | | | | | | | | |
| 8 | 12024064 | CONECTOR USB VISUAL PLUS | VISUAL PLUS USB CONNECTOR | 1 | | | | | | | | | | |
| S/Nº | 12023647 | TAPA USB VISUAL PLUS | VISUAL PLUS USB COVER | 1 | | | | | | | | | | |
| 9 | 12127553 | SOPORTE TARJETAS PLUS | PLUS CARDS SUPPORT | 1 | | | | | | | | | | |
| 10 | 12025260 | DISTANCIADOR 3M | 3M SPACER | 8 | | | | | | | | | | |
| 11 | 12024612 | FIJACION CIRCUITO | CARD CONTROL FIXER | 4 | | | | | | | | | | |

| MOD. | HORNOS / OVEN | ZONA / ZONE | VARIOS / MISCELLANEOUS | PLANO DIAGRAM | |
|---|---|---|---|---|---|

| ITEM | CODIGO REFERENCE | DENOMINACION | DENOMINATION | ACE-202 | AE-202 | APE-202 | | | | | | ELIMINADO ELIMINATED | INTRODUCID. INTRODUCED | NOTAS |
|---|---|---|---|---|---|---|---|---|---|---|---|---|---|---|
| | 12043770 | INSTAL. ELECTRICA ACE 201, 202 | ELEC. INSTALL. ACE 201, 202 | 1 | _ | _ | | | | | | | | |
| | 12041729 | INST. ELECTR. APE, AE, 202, 201 | ELEC. INSTA. APE, AE, 202, 201 | _ | 1 | 1 | | | | | | | | |
| | 12043797 | CABLEADO ACE 20 2 | WIRING ACE 20 2 | 1 | _ | _ | | | | | | | | |
| | 12043793 | CABLEADO FUERZA ACE 20 2 | POWER WIRE ACE 20 2 | 1 | _ | _ | | | | | | | | |
| | 12041830 | CABLEADO FUERZA APE 202 | POWER WIRE APE 202 | _ | 1 | 1 | | | | | | | | |
| | 12041804 | CABLEA. RESISTENCIAS APE 202 | RESISTOR WIRING APE 202 | _ | 1 | 1 | | | | | | | | |
| | 12024575 | CABLEADO LUZ INTERIOR 20-21 | INTERIOR LIGHT WIRING 20-21 | 1 | 1 | 1 | | | | | | | | |
| | 12023696 | CABLEADO BMF | WIRING BMF | 1 | 1 | 1 | | | | | | | | |
| | 12040567 | CABLEADO LAVADO 201-102-202 | WIRING CABLE 201-102-202 | _ | _ | 1 | | | | | | | | |
| | 12008976 | CABLEADO PULSADOR RESET | RESET BUTTON WIRING | _ | _ | 1 | | | | | | | | |
| | 12023775 | CABLE USB VISUAL PLUS 1,5M | VISUAL PLUS USB CABLE 1,5M | _ | _ | 1 | | | | | | | | |
| | 12009277 | CD HACCP VISUAL COMPLETO | HACCP CD COMPLETE VISUAL | _ | _ | 1 | | | | | | | | |
| | 12130541 | CABLEADO VENTILADOR 201-202 | 201-202 OVEN FAN WIRING | 1 | 1 | 1 | | | | | | | | |
| | 12009257 | CABL. TRANSFORMADOR-TFT UL | TFT UL TRANSFORMER WIRING | _ | _ | 1 | | | | | | | | |
| | 12025235 | CONECTOR PASO 3,96MM 8 VIAS | CONNECTOR ROUTES 3,96MM 8 | 1 | 1 | 1 | | | | | | | | |
| | | | | | | | | | | | | | | |
| | | | | | | | | | | | | | | |
| | | | | | | | | | | | | | | |
| | | | | | | | | | | | | | | |
| | | | | | | | | | | | | | | |
| | | | | | | | | | | | | | | |
| | | | | | | | | | | | | | | |
| | | | | | | | | | | | | | | |
| | | | | | | | | | | | | | | |
| | | | | | | | | | | | | | | |
| | | | | | | | | | | | | | | |
| | | | | | | | | | | | | | | |
| | | | | | | | | | | | | | | |
| | | | | | | | | | | | | | | |
| | | | | | | | | | | | | | | |
| | | | | | | | | | | | | | | |

| MOD. | HORNOS / OVEN | ZONA / ZONE | REPUESTOS RECOMENDADOS<br>RECOMMENDED SPARE PART | PLANO<br>DIAGRAM | |
|---|---|---|---|---|---|

| ITEM | CODIGO REFERENCE | DENOMINACION | DENOMINATION | ACE-202 | AE-202 | APE-202 | | | | | | ELIMINADO ELIMINATED | INTRODUCID. INTRODUCED | NOTAS |
|---|---|---|---|---|---|---|---|---|---|---|---|---|---|---|
| **23** | **12094579** | **KIT PUERTA 202 CIERRE UNICO** | **SINGLE LOCK DOOR 202 KIT** | **1** | **1** | **1** | | | | | | | | C-3035-14 |
| **1** | **12039272** | **KIT CRISTAL INTER. 202** | **202 INNER GLASS KIT** | **1** | **1** | **1** | | | | | | | | C-3035-14 |
| 8 | 12039312 | BISAGRA SUPERIOR | UPPER HINGE | 1 | 1 | 1 | | | | | | | | C-3035-14 |
| 12A | 12135274 | REP. ASA COMP. 20X CIERRE UNICO | SPARE SINGLE LOCK 20X HANDLE | 1 | 1 | 1 | | | | | | | | C-3035-14 |
| 13 | 12047967 | BASE BISAGRA INFERIOR 6 DIEN | LOWER HINGE BASE | 1 | 1 | 1 | | | | | | | | C-3035-14 |
| 16 | 12024560 | INTERRUPTOR MAGNETICO AC | MAGNETIC SWITCH AC | 1 | 1 | 1 | | | | | | | | C-3035-14 |
| 21 | 12039298 | JUNTA PUERTA 202 | DOOR JOINT 202 | 1 | 1 | 1 | | | | | | | | C-3035-14 |
| 22 | 12039307 | JUNTA CIERRE INFERIOR 202 | LOWER LOCK JOINT 202 | 1 | 1 | 1 | | | | | | | | C-3035-14 |
| 1 | 12025161 | E.V. 230VAC 50/60Hz 1V | SOLENOID VALVE 230VAC 1 W | 1 | | 1 | | | | | | | | C-3036 |
| 2 | 12023794 | E.V. 230VAC 50/60Hz 2V | SOLENOID VALVE 230VAC 2 W | 1 | 1 | _ | | | | | | | | C-3036 |
| 2 | 12115418 | E.V. 230VAC 50/60Hz 3V | SOLENOID VALVE 230VAC 3 W | _ | 1 | 1 | | | | | | | | C-3036 |
| 19 | 12095019 | TERMOSTATO_261_NA_51ºC | THERMOSTAT_261_NA_51ºC | 1 | 1 | _ | | | | | | | | C-3036 |
| 1 | 12024325 | MOTOR 230V AC 3N650KW 1450RPM | MOTOR 230V AC 3N650KW 1450 | 2 | 2 | 2 | | | | | | | | C-3038 |
| 4 | 12024510 | RETEN 17X28X7V | RETAINER 28x17x7 | 4 | 4 | 4 | | | | | | | | C-3038 |
| 5 | 12010122 | ANILLO DE SEGURIDAD Ø 28X1.2 | SAFETY RING 28x1,2 | 2 | 2 | 2 | | | | | | | | C-3038 |
| 6 | 12024306 | TURBINA RECTA Ø350X127 HANN. | TURBINE RECTA Ø350X127 HAN | 2 | 2 | 2 | | | | | | | | C-3038 |
| 8 | 12024349 | RESISTENCIA INTERIOR 3 X 5KW | INSIDE RESISTANCE 3 X 5KW | 2 | 2 | 2 | | | | | | | | C-3038 |
| 9 | 12024359 | RESISTENCIA EXTERIOR 3 X 5KW | EXTERNAL RESISTANCE 3 X 5KW | 2 | 2 | 2 | | | | | | | | C-3038 |
| 11 | 12025193 | INTERRUPTOR PUERTA | DOOR SWITCH | 2 | 2 | 2 | | | | | | | | C-3039 |
| 12 | 12024638 | MOTOR CHIMENEA | FLUEPIPE MOTOR | 1 | 1 | 1 | | | | | | | | C-3039 |
| 14 | 12024122 | TUBO FLEXIBLE Ø53X360 | FLEXIBLE TUBE Ø53X360 | 1 | 1 | 1 | | | | | | | | C-3039 |
| **13** | **12126816** | **KIT VALVULA DESAGUE ADVAN.** | **VALVE DRAIN ADVANCE KIT** | _ | _ | **1** | | | | | | | | C-3040 |
| 22 | 12024782 | MOTOBOMBA 230V AC 1N 50Hz | MOTOR 230V AC 1N 50Hz 74,6 | _ | _ | 1 | | | | | | | | C-3040 |
| **1** | **12046064** | **KIT GENERADOR VAPOR 202** | **STEAM GENERATOR 202 KIT** | _ | **1** | **1** | | | | | | | | C-3041 |
| 5 | 12023573 | ELECTRODO ALTO | HIGH LEVEL ELECTRODE | _ | 1 | 1 | | | | | | | | C-3041 |
| 6 | 12023574 | ELECTRODO BAJO | LOW LEVEL ELECTRODE | _ | 1 | 1 | | | | | | | | C-3041 |
| 7 | 12023575 | ELECTRODO DE MASA | EARTH ELECTRODE | _ | 1 | 1 | | | | | | | | C-3041 |
| 10 | 12024752 | RESISTENCIA 3x3000W 230V | RESISTOR 3x3000W 230V | _ | 1 | 1 | | | | | | | | C-3041 |
| 12 | 12024747 | RESISTENCIA 3x3000W | RESISTOR 3x3000W | _ | 5 | 5 | | | | | | | | C-3041 |
| 16 | 12039546 | MOTOBOMBA 230V AC 1N 50/60Hz | PUMP 230V AC 50/60Hz 30W 1N | _ | 1 | 1 | | | | | | | | C-3041 |
| 17 | 12023901 | CONJUNTO TERMOPAR VAPOR (Tg) | STEAM THERMOCOUPLE UNIT (Tg) | _ | 1 | 1 | | | | | | | | C-3041 |

| MOD. | HORNOS / OVEN | ZONA / ZONE | REPUESTOS RECOMENDADOS<br>RECOMMENDED SPARE PART | PLANO<br>DIAGRAM | |
|---|---|---|---|---|---|

| ITEM | CODIGO REFERENCE | DENOMINACION | DENOMINATION | ACE-202 | AE-202 | APE-202 | | | | | | ELIMINADO ELIMINATED | INTRODUCID. INTRODUCED | NOTAS |
|---|---|---|---|---|---|---|---|---|---|---|---|---|---|---|
| 1 | 12048798 | REP VARIADOR REGULADO ADV | REGULATED VARIATOR ADV | 2 | 2 | 2 | | | | | | | | C-3042 |
| 2 | 12024642 | CONJUN. TERMOPAR CAMARA (Tn) | CHAM. THERMOCOUPLE UNIT (Tn) | 1 | 1 | 1 | | | | | | | | C-3042 |
| 6 | 12039548 | SONDA PINCHO ADVANCE | ADVANCE PROBE PINCHO | 1 | 1 | 1 | | | | | | | | C-3042 |
| 7 | 12024011 | CONTACTOR 230 V. 50-60 HZ | 230 V. 50-60 HZ CONTACTOR | 1 | 1 | 1 | | | | | | | | C-3042 |
| 8 | 12024591 | TERMOSTATO LIMITADOR 10/21 | LIMITER THERMOSTAT10/21 | 1 | 1 | 1 | | | | | | | | C-3042 |
| 9 | 12024884 | TERMOSTATO LIMITADOR CORTE | THERMOSTAT LIMITER | _ | 1 | 1 | | | | | | | | C-3042 |
| 14 | 12024106 | VENTILADOR 230V AC 1N 50/60Hz 36KW | FAN 230V AC 1N 50/60Hz 36KW | 2 | 2 | 2 | | | | | | | | C-3042 |
| 17 | 12047675 | CONJUN.TERMOP. VAPOR L625 (Tv) | STEAM THERMOCOUPLE L625 (Tv) | 1 | 1 | _ | | | | | | | | C-3042 |
| 17 | 12039678 | CONJUN.TERMOPAR VAPOR Ø4 (Tv) | STEAM THERMOCOUPLE Ø4 (Tv) | _ | _ | 1 | | | | | | | | C-3042 |
| 20 | 12024173 | TRANSFORMADOR 12-0-12-0,24-0 | TRANSFORMER 12-0-12-0,24-0 | 1 | 1 | 1 | | | | | | | | C-3042 |
| 1 | 12130672 | TARJETA CAMARA GRAB. LAVADO | RECORD. CHAMBER CARD WASH | 1 | 1 | 1 | | | | | | | | C-3043 / C-3044 / C-3045 |
| 2 | 12130674 | TARJ. PORTAM. GRABADA LAVADO | REC. COTRL PANEL CARD WASH | 1 | _ | _ | | | | | | | | C-3043 |
| 5 | 12044109 | SERIGRAFIA CONCEPT ADVANCE E. | SERIGRAPHY CONCEPT ADVAN | 1 | _ | _ | | | | | | | | C-3043 |
| 2 | 12130675 | REP PORTAM. ADVANCE LAVADO | RECORD. C. PANEL CARD WASH | _ | 1 | _ | | | | | | | | C-3044 |
| 3 | 12046670 | CONTROL TARJETA CALD. 12V AC 50/60 | CARD CONTROL 12V AC 50/60Hz | _ | 1 | 1 | | | | | | | | C-3044 / C-3045 |
| 5 | 12043405 | ENCODER GAMA ADVANCE | ADVANCE RANGE ENCODER | _ | 1 | _ | | | | | | | | C-3044 |
| 7 | 12129465 | SERIGRAFIA ADVANCE LAVADO | ADVANCE SERIGRAPHY WASHING | _ | 1 | _ | | | | | | | | C-3044 |
| 1 | 12041815 | JUNTA PORTAMANDOS ADV PLUS | CONTROL PANEL SEAL ADV PLUS | 1 | 1 | 1 | | | | | | | | C-3045 |
| 4 | 12121349 | PLAT ADV PLUS CON SOFTWARE | ADV PLUS SOFTWARE PLATF. | _ | _ | 1 | | | | | | | | C-3045 |
| | | | | | | | | | | | | | | |
| | | | | | | | | | | | | | | |
| | | | | | | | | | | | | | | |
| | | | | | | | | | | | | | | |
| | | | | | | | | | | | | | | |
| | | | | | | | | | | | | | | |
| | | | | | | | | | | | | | | |
| | | | | | | | | | | | | | | |
| | | | | | | | | | | | | | | |
| | | | | | | | | | | | | | | |
| | | | | | | | | | | | | | | |
| | | | | | | | | | | | | | | |

# APE 06 1, APE 10 1, APE 10 2, APE 20 1, APE 20 2
# AE 06 1, AE 10 1, AE 10 2, AE 20 1, AE 20 2
# ACE 06 1, ACE 10 1, ACE 10 2, ACE 20 1, ACE 20 2

| | |
|---|---|
| Mod. 101 | RC2=3x3KW |
| Mod. 201 | RC2=3x6KW |
| Mod. 102 | RC2=3x5KW |
| Mod. 202 | RC2=6x5KW |

| | |
|---|---|
| Mod. 061, 101 | RC1=3x3KW |
| Mod. 201 | RC1=3x6KW |
| Mod. 102 | RC1=3x5KW |
| Mod. 202 | RC1=6x5KW |

| | | |
|---|---|---|
| Mod. VPE, VE, | Mod. 061, 101 | RV1=3x3KW |
| | Mod. 201, 102 | RV1=6x3KW |
| | Mod. 202 | RV1=9x3KW |
| | Mod. 101, 102, 201 | RV2=3x3KW |
| | Mod. 202 | RV2=9x3KW |

3 ~ 400V

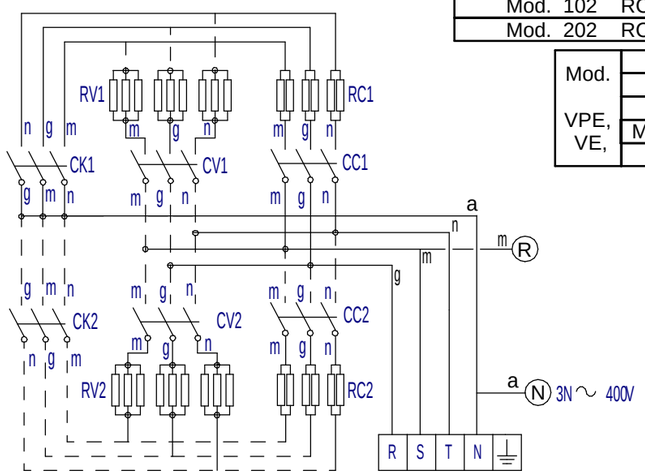


3 ~ 230V

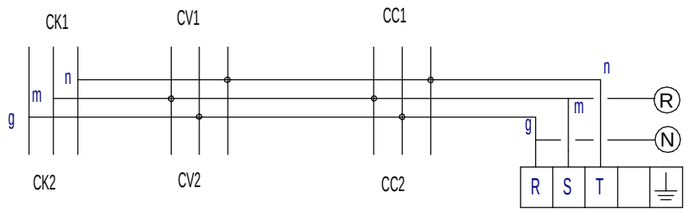


1N ~ 230V

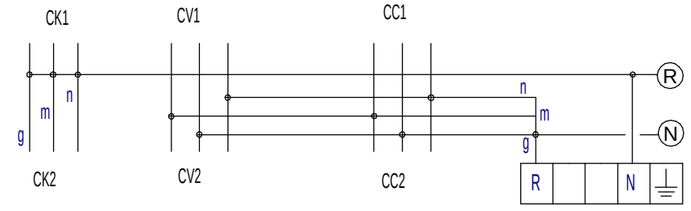


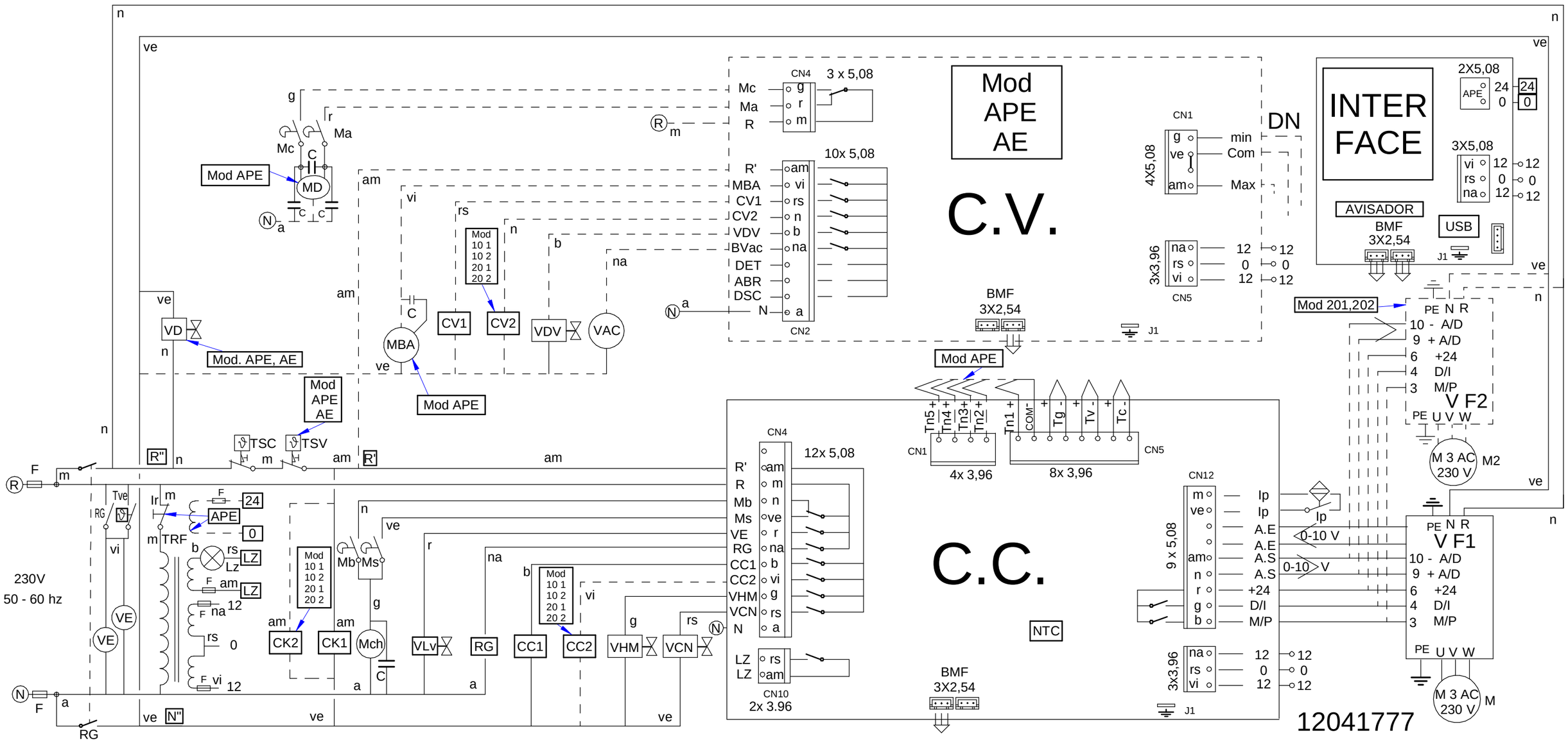

VE 061,101,102 12023862
VE 201,202 12023862

Ms 12025193
Mch 12018443
Mb 12025193
Hanning 12024325
FIR 12024358
12024463
M1
am/ve

VF1 12024329
TSC 12024591 360ºC
TSV 12024884
RG 12024011
12025158 Fusible 10A 12101598

C.V. 12007948
VE, VPE
Mc Ma R
R' MBA CV1 CV2 VDV BVac DET ABR DSC N
min Com Max
12 0 12
BMF

12039496 101
12039497 061
202
RC RC RC
RC 202
15+15 KW 12024349 + 12024359

12023573
12023574
12023575
VE, VPE

201
RC 102
15+15 KW 12024349 + 12024359

12024463
RC 202 15+15 KW
12024349 + 12024359

CC1 CC2 CV2 APE, AE
CK1 CK2 CV1 APE, AE

INTER FACE
EPROM
USB
AVISADOR
VE, COE 12 0 12
VPG 0 24
BMF
am/ve

TSV
Tg
RV 12024752 APE, AE
061 101 201 102
101 201 102
201 102
202
202
TCND TV

Hanning 12024325
FIR 12024358
M2
20X

VF2
12040923
12091129 TRF UL
12040921
Fusible 0,8 A 12101595
Fusible 1 A 12101596
Fusible 2,5 A 12101597

VPE
Tn5+ Tn4+ Tn3+ Tn2+ Tn1+ COM- Tg- Tv- Tc-
C.C.
R' R Mb Ms VE RG CC1 CC2 VHM VCN N
Ip Ip As As +24 D/I M/P
12 0 12
LZ LZ BMF
12007938

Version 200V
12047349
230 0 200 0 m a n a
12017523

Variador de Siemens.
Pulsar [P] paraentrar o salir de los Parmetros.
Nota. Si se modifica algunvalor del nivel Basico, hay que volver a grabar el nivel 3.

P0010 = 1 Para inicio programación. (Nivel Basico)
P0100 = 0 ( Valor en KW 50Hz Europa)
P0304 = 230 (Vn V)
P0305 = 1,8 (Inb A)
P0307 = 0,37 (Pn KW)
P0310 = 50 (Fn Hz)
P0311 = 1400 (rpm Nom)
P0700 = 2 (Terminal)
P1000 = 2 (Consigna ADC)
P1080 = 25 (F.min Hz)
P1082 = 50 (F.Max Hz)
P1120 = 5” (Ton “)
P1121 = 5” (Toff “)
P3900 = 1 (Fin de la programación y grabación de datos.)
**P0003 =3 (Nivel 3 Experto).**
P0005 = 27 (Visualizacion = Corriente de salida)
P0611 = 16000 (Tiempo de activación de sobrecarga Seg.)
P0640 = 150 (Sobrecarga de corriente en %)
P1210 = 6 (Rearranque automático)
P1300 = 2 (Modo Parábola, Ventilador)
P1800 = 16 (F.Base KHz) (Cuanto mas alto: - ruido acústico )
P2000 = 55 (F.Refencia de la consigna Hz) (H061 = 47)

COPIAR PARAMETROS DESDE EL BOP AL VARIADOR
P0003 = 3
P0010= 30
P0803 = 1

SOLO USAR CUANDO EL BOP SE HA BORRADO
P0802 desde Variador a BOP

| | | 061 | 101 | 102 | 201 | 20 2 | 201 | 10 2 | 10 1 | 061 |
|---|---|---|---|---|---|---|---|---|---|---|
| | | A E | | A P E | A E | A C E | | | | |
| General | 1 | 12043785 | 12041848 | | 12041729 | 12043770 | | 12043773 | | 12043788 |
| General UL | 1 | 12098154 | 12098171 | | | | | | | |
| FUERZA | 2 | | 12009443 | 12008538 | 12041830 | 12043793 | 12009306 | | 12009302 | |
| FUERZA UL | 2 | | 12098246 | 12098251 | | | | | | |
| CC,CV,CK | | 12024040 | | 12041014 | 12043505 | | 12041014 | | 12024040 | |
| Resist | 4 | 12043785 | 12041911 | 12009450 | 12041781 | 12041804 | 12043797 | 12043807 | 12009626 | 12043800 | 12043788 |
| Resist UL | 4 | | 12098258 | 12098261 | | | | | | |
| BMF | 7 | 12023696 | | | | | | | | |
| Lz | 10 | 12024569 | | | 12024575 | | | 12024569 | | |
| Lav (APE) | 11 | | | 12040567 | | | | | | |
| Rst (APE) | 12 | | | 12008976 | | - | | | | |
| TFT (APE) | 13 | | | 12009257 | | | | | | |
| USB (APE) | 14 | | | 12023775 | | | | | | |
| Ventilador | 15 | 12130535 | | | 12130541 | | | 12130535 | | |
| Esquema | - | 12041777 ( Mod. 200V 12047334) (Mod 400V sin Neutro 12093105) (12098475 UL) | | | | | | | | |
| Leyenda | - | 12022177 | | | | | | | | |
| Ind.Comp | - | 12022160 | | | | | | | | |

3 200... 230 V
am /ve n m g
R S T

1N 200... 230 V
am /ve g m n N
g m n R

PRENSAESTOPAS
PG29 101,102, 201, 12009851
PG36 202 12025025

Mod AE, APE
VAc
12039546
12040567
12009059
12025135
Mc 12025193
Md 2024754
Ma 2025193
Mod APE
12024782 50Hz
12024787 60Hz
APE 201 202
12017826 50/60 Hz
APE 061, 101, 102
Mod ACE
12025161
VCN 3 l/min Berdea 12024083
VHM 0.25l/min Gorria 12024509
VDV 8l/min Urdina 12024045
VLV
VD
12023794
Tornillo M6x15 LATON Q013042
Cable masa
Tuerca M6 LATON Q163040
**12041895**
VE 061,101,102 12023862
VE 201,202 12014105
12024560 Ip
Lz 12024545 12025123
Mod 20x
12024064
12023647
12023927
VPE
T723010000 ?

| APARATO / APPLIANCE | HORNOS / OVENS | ZONA / ZONE | KIT BARCO / SHIP KIT | PLANO DRAWING | |
|---|---|---|---|---|---|

| ITEM | CODIGO REFERENCE | DENOMINACION | DENOMINATION | ACE-202 | AE-202 | APE-202 | | | | | | ELIMINADO ELIMINATED | INTRODUCID. INTRODUCED | NOTAS |
|---|---|---|---|---|---|---|---|---|---|---|---|---|---|---|
| | 12017293 | TRANSFORMADOR 400/230 V, 2 | TRANSFORMER 400/230 V, 2 | 1 | 1 | 1 | | | | | | | | |
| | 12095128 | CHAPA TRANSFO. BARCO | SHIP TRANSFORMER SHEET | 1 | 1 | 1 | | | | | | | | |
| | 12022528 | GUIA CONTACTOR L-73 | CONTACTOR GUIDE L-73 | 1 | 1 | 1 | | | | | | | | |
| | 12127889 | VARIADOR 400V 50/60Hz 1,10KW U | VARIATOR 400V 50/60Hz 1,10KW U | 1 | 1 | 1 | | | | | | | | |
| | 12023549 | CABLEADO REGL-CONTFE-6-7-8-9 | SOCKET-CONTFE 6-7-8-9 WIRING | 1 | 1 | 1 | | | | | | | | |
| | 12009522 | CABLEADO 400V SIN NEUTRO | 400V WITHOUT NEUTRAL WIRING | 1 | 1 | 1 | | | | | | | | |
| | 12093105 | ESQ. TEORICO APE, AE 400V S/N | TEORICAL SCHEME 400V N/NEUT | 1 | 1 | 1 | | | | | | | | |
| | 12095209 | HOJA INFO TRANSFORM. 400V. S/N | INFO. SHEET TRANSF 400V N/NEU | 1 | 1 | 1 | | | | | | | | |
| | 12004270 | PLANO DE MONTAJE | ASSEMBLY DRAWING | 1 | 1 | 1 | | | | | | | | |

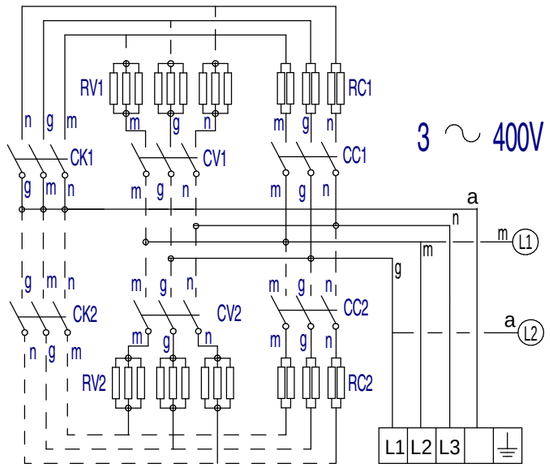


| | |
|---|---|
| Mod. 101 | RC2=3x3KW |
| Mod. 201 | RC2=3x6KW |
| Mod. 102 | RC2=3x5KW |
| Mod. 202 | RC2=6x5KW |

| | |
|---|---|
| Mod. 061, 101 | RC1=3x3KW |
| Mod. 201 | RC1=3x6KW |
| Mod. 102 | RC1=3x5KW |
| Mod. 202 | RC1=6x5KW |

| | | |
|---|---|---|
| Mod. VPE, VE, | Mod. 061, 101 | RV1=3x3KW |
| | Mod. 201, 102 | RV1=6x3KW |
| | Mod. 202 | RV1=9x3KW |
| | Mod. 101, 102, 201 | RV2=3x3KW |
| | Mod. 202 | RV2=9x3KW |

APE 06 1, APE 10 1, APE 10 2, APE 20 1, APE 20 2
AE 06 1, AE 10 1, AE 10 2, AE 20 1, AE 20 2
ACE 06 1, ACE 10 1, ACE 10 2, ACE 20 1, ACE 20 2

# 400 V sin Neutro

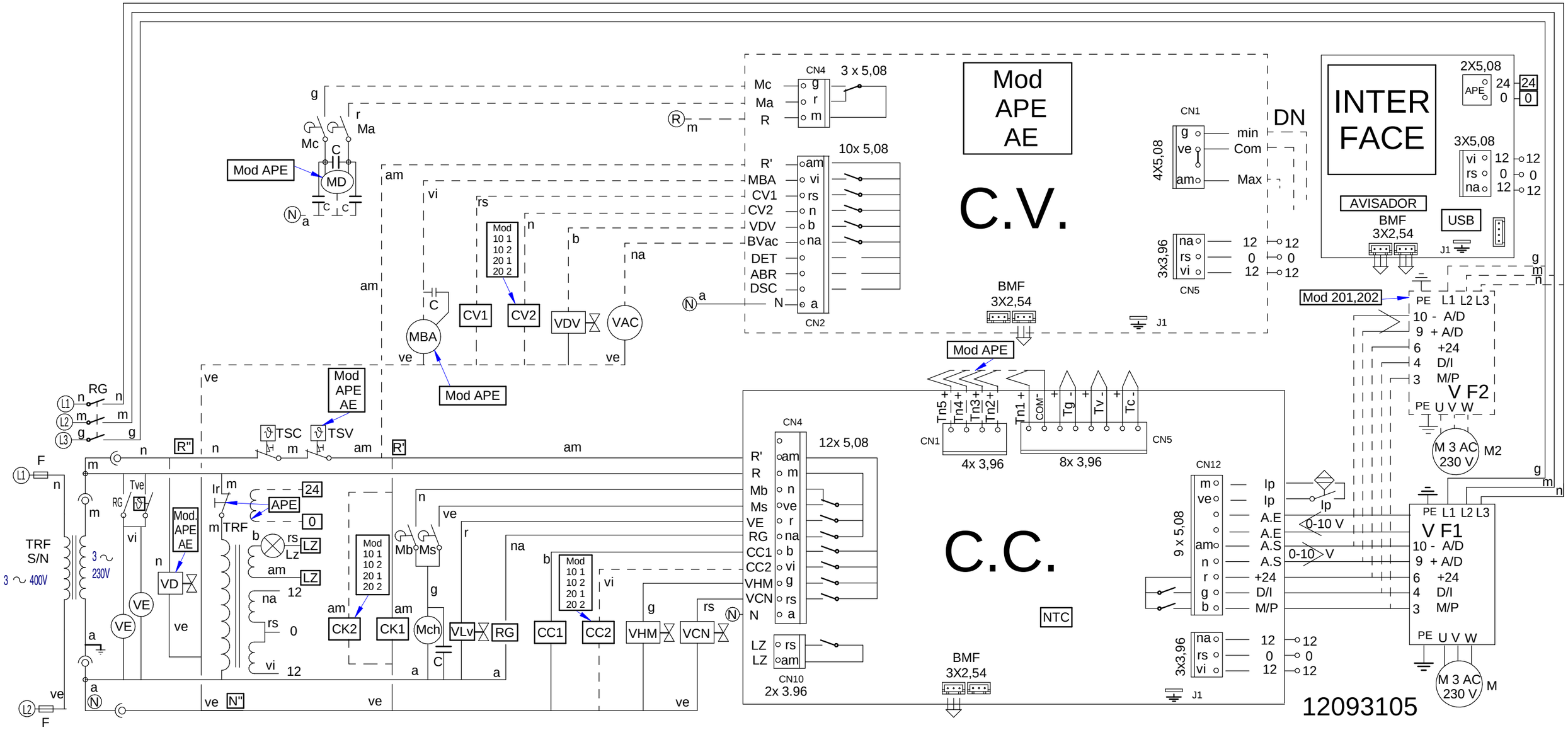

# KIT 400V SIN NEUTRO
# HORNOS ELECTRICOS
# 400V KIT, WITHOUT NEUTRAL
# ELECTRIC OVENS

12004270

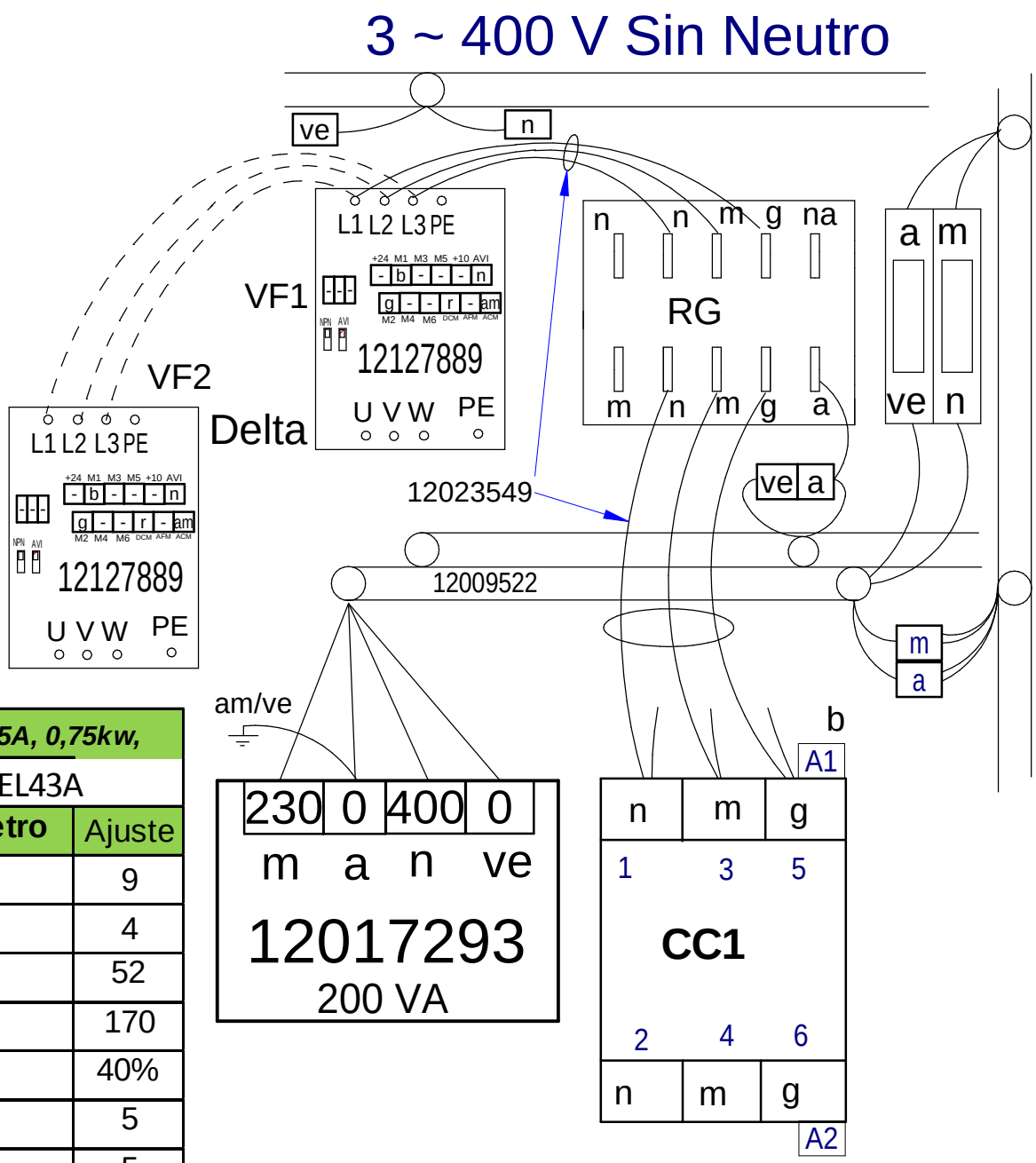


| *400V, 2,5A, 0,75kw,* | |
|---|---|
| VFD007EL43A | |
| **Parámetro** | Ajuste |
| 00.02 | 9 |
| 00.04 | 4 |
| 01-00 | 52 |
| 01-02 | 170 |
| 01-08 | 40% |
| 01-09 | 5 |
| 01-10 | 5 |
| 02.03 | 12 |
| 02.05 | 2 |
| 04.04 | 1 |
| 06-02 | 100% |
| 06-06 | 1 |
| 08.15 | 3 |

## Esquema Electrico 12093105

Nota: El cable azul que va a CK1, conectarlo a CV1 junto al cable gris.

Note: The blue wire that going to CK1, Connect to CV1 with gray wire together.

| | ESPAÑOL | ENGLISH | FRANÇAIS | ITALIANO | DEUTSCH |
|---|---|---|---|---|---|
| BEC | Bujía Encendido Cámara | Chamber Spark Plug | Bougie Allumage Chambre | Candela di Accensione Camera | Zündkerze Einschalten Garraum |
| BEV | Bujía Encendido Caldera | Boiler Spark Plug | Bougie Allumage Chaudière | Candela di Accensione Caldaia | Zündkerze Einschalten Boile |
| C.C. | Control Camara | Chamber Control | Contrôle Chambre | Controllo Camera | Steuerung Garraum |
| C.E.C | Control Combustión Cámara | Chamber Combustion Control | Contrôle Combustion Chambre | Controllo Combustione Camera | Steuerung Verbrennung Garraum |
| C.E.V | Control Combustión Caldera | Boiler Combustion Control | Contrôle Combustion Chaudière | Controllo Combustione Caldaia | Steuerung Verbrennung Boiler |
| C.G. | Control Gas | Control Gas | Contrôle Gaz | Controlli il gas | Steuern Sie Gas |
| C.V. | Control Caldera | Boiler Control | Contrôle Chaudière | Controllo Caldaia | Steuerung Boiler |
| CC1, CC2 | Contactor Resistencia Cámara | Chamber Heating Element Contactor | Contacteur Élément Chauffant Chambre | Contattore Resistenza Camera | Schütz Heizwiderstand Garraum |
| CK1, CK2 | Contactor General Calentamiento | Heating Element Relay | Relais Élément Chauffant | Relè Resistenza | Relais Heizwiderstand |
| CV1, CV2 | Contactor Resistencias Caldera | Boiler Heating Element Contactor | Contacteur Élément Chauffant Chaudière | Contattore Resistenza Caldaia | Schütz Heizwiderstand Boiler |
| DEC | Detector Llama Cámara | Chamber Flame Detector | Détecteur Flamme Chambre | Rilevatore di Fiamma Camera | Flammendetektor Garraum |
| DEV | Detector Llama Caldera | Boiler Flame Detector | Détecteur Flamme Chaudière | Rilevatore di Fiamma Caldaia | Flammendetektor Boiler |
| DN | Detector Nivel Caldera | Boiler Level Detector | Détecteur Niveau Chaudière | Rilevatore Livello Caldaia | Pegeldetektor Boiler |
| E1, E2, E3 | Encendedor, generador de chispa | Spark generator | Générateur d'étincelles | Generatore di scintille | Funkengenerator |
| F,F1,F2,F3,F4,F | Fusibles | Fuses | Fusibles | Fusibili | Sicherungen |
| FI | Filtro Interferencias | Interference Filter | Filtre Interférences | Filtro Interferenze | Störungsfilter |
| FM | Térmico Motor | Thermal Engine | Thermique Moteur | Termico Motore | Thermoschalter Motor |
| GV1, GV2 | Electro válvula Gas Cámara | Chamber Gas Solenoid Valve | Électrovanne Gaz Chambre | Elettrovalvola Gas Camera | Elektroventil Gas Garraum |
| GV3, GV4 | Electro válvula Gas Caldera | Boiler Gas Solenoid Valve | Électrovanne Gaz Chaudière | Elettrovalvola Gas Caldaia | Elektroventil Gas Boiler |
| Ip | Interruptor Seguridad Puerta | Door Safety Switch | Interrupteur Sécurité Porte | Iterruttore Sicurezza Porta | Sicherheitsschalter Tür |
| Lz | Luz Interior | Inner Light | Éclairage Intérieur | Luce Interna | Innenbeleuchtung |
| M, M2 | Motor Turbina | Turbine Engine | Moteur Turbine | Motore Turbina | Motor Turbine |
| Ma | Interruptor Micro Abierto | Open Microswitch | Microrupteur Ouvert | Iterruttore Micro Aperto | Mikroschalter Geöffnet |
| Mb | Interruptor Micro Bajada | Drop Microswitch | Microrupteur Descente | Iterruttore Micro Discesa | Mikroschalter Senken |
| Mc | Interruptor Micro Cerrado | Closed Microswitch | Microrupteur Fermé | Iterruttore Micro Chiuso | Mikroschalter Geschlossen |
| Mch | Motor Chimenea | Stack Engine | Moteur Cheminée | Motore Canna | Motor Abluftkamin |
| MD | Motor Desague | Drain Engine | Moteur évacuation | Motore scolo | Motor Abfluss |
| Ms | Interruptor Micro Subida | Rise Microswitch | Microrupteur Montée | Iterruttore Micro Salita | Mikroschalter Heben |
| RC | Resistencias Cámara | Chamber Heating Element | Éléments Chauffants Chambre | Resistenze Camere | Heizwiderstände Garraum |
| RG | Rele General | Main Relay | Relais Général | Relè principale | Hauptrelais |
| RV | Resistencias Caldera | Boiler Heating Element | Éléments Chauffants Chaudière | Resistenze Caldaia | Heizwiderstände Boiler |
| Tc | Sonda Cámara | Chamber Probe | Sonde Chambre | Sonda Camera | Sonde Garraum |
| TCN | Termostato Condensación | Condensation Thermostat | Thermostat Condensation | Termostato Condensazione | Thermostat Kondensierung |
| Tg | Sonda Caldera | Boiler Probe | Sonde Chaudière | Sonda Caldaia | Sonde Boiler |
| Tn | Sonda Núcleo | Core Probe | Sonde Noyau | Sonda Nucleo | Kerntemperaturmessonde |
| TRF | Transformador | Transformer | Transformateur | Trasformatore | Transformator |
| TSC | Termostato Seguridad Cámara | Chamber Safety Thermostat | Thermostat Sécurité Chambre | Termostato Sicurezza Camera | Sicherheitsthermostat Garraum |
| TSV | Termostato Seguridad Caldera | Boiler Safety Thermostat | Thermostat Sécurité Chaudière | Termostato Sicurezza Caldaia | Sicherheitsthermostat Boiler |
| Tv | Sonda Vapor | Steam Probe | Sonde Vapeur | Sonda Vapore | Sonde Dampf |
| VAC | Bomba Vaciado | Vacuum Pump | Pompe Vidange | Pompa scarico | Ablasspumpe |
| MBA | Moto Bomba Aclarado | Rinsing Pump | Pompe Rinçage | Pompa Risciacquo | Pumpe Ausspülen |
| VC1, VC2 | Ventilador Soplante Camara | Blowing Fan | Ventilateur Soufflant | Ventilatore Soffiante | Ventilator Gebläse |
| VCN | Electro válvula Condensación | Condensation Solenoid Valve | Électrovanne Condensation | Elettrovalvola Condensazione | Elektroventil Kondensierung |
| VDV | Electro válvula Llenado Caldera | Chamber Filling Solenoid Valve | Électrovanne Remplissage Chaudière | Elettrovalvola di Riempimento Caldaia | Elektroventil Füllung Boiler |
| VE | Ventilador Cuadro Eléctrico | Fan Switchboard | Ventilateur Tableau Électrique | Ventilatore Quadro Elettrico | Ventilator Elektrotafel |
| VF1,VF2 | Variador de Frecuencia | Speed Variator | Variateur Vitesse | Variatore di Velocità | Geschwindigkeitsregler |
| VHM | Electro válvula Humidificador | Humidifier Solenoid Valve | Électrovanne Humidificateur | Elettrovalvola Umidificatore | Elektroventil Befeuchtungsvorrichtung |
| Vv | Ventilador Soplante Caldera | Boiler Blowing Fan | Ventilateur soufflement chaudière | Ventilatore Soffiante caldaia | Durchbrennenventilator zum Dampfkessel |
| | **COLORES** | **COLOUR** | **COULEURS** | **COLORE** | **FARBEN** |
| a / BLU | Azul | Blue | Bleu | Blu | Blau |
| am / YEL | Amarillo | Yellow | Jaune | Giallo | Gelb |
| am ve / YEL GRN | Amarillo/verde | Yellow / green | Jaune / vert | Giallo/verde | Gelb/grün |
| b / WHT | Blanco | White | Blanc | Bianco | Weiß |
| g / GRY | Gris | Grey | Gris | Grigio | Grau |
| m / BRN | Marrón | Brown | Marron | Marrone | Braun |
| n / BLK | Negro | Black | Noir | Nero | Schwarz |
| na / ORG | Naranja | Orange | Orange | Arancio | Orange |
| r / RED | Rojo | Red | Rouge | Rosso | Rot |
| rs / PNK | Rosa | Pink | Rose | Roseo | Rosa |
| ve / GRN | Verde | Green | Vert | Verde | Grün |
| vi / PRP | Violeta | Purple | Violet | Viola | Violett |
| | | | | | 12022177 |