DESPIECE TECNICO

Hornos Mixtos
Fours Mixtes
Combi Ovens
HeiBluftdämpfer
Forno Misti

Modelos:

HEI-6/11
HEM-6/11
HEP-6/11

HEI-10/11
HEM-10/11
HEP-10/11

Febrero 2008 February

FAGOR

Fagor Industrial

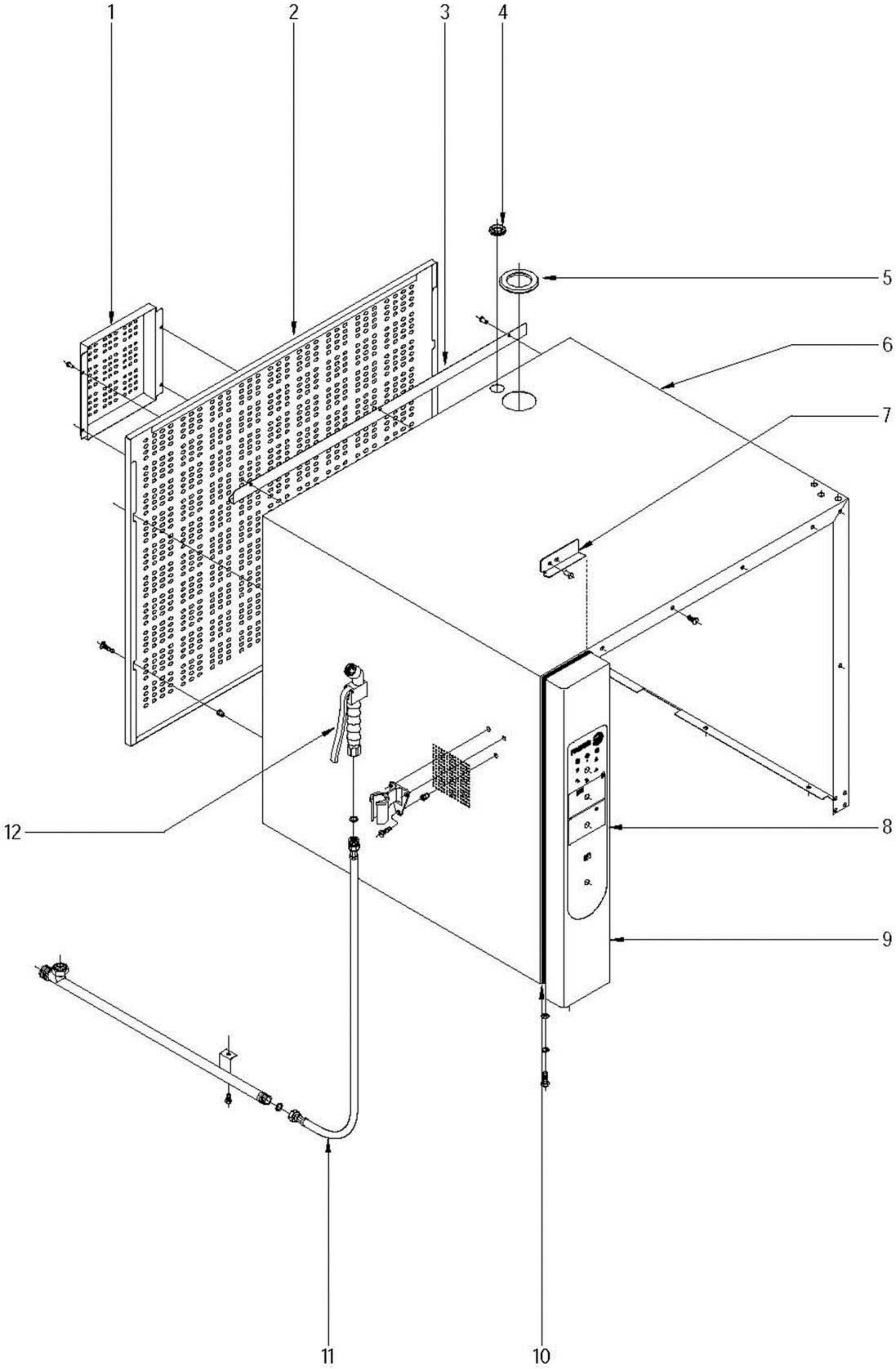

N plano	Firma	Fecha	Aparato	Lamina	
C-1959		2008-02	MUEBLE HORNOS HEI; HEM; HEP 6/11-10/11	1	Fagor Industrial S.Coop. FAGOR Onate

MOD.	HORNOS	ZONA	MUEBLE	PLANO	C-1959

ITEM	CODIGO	DENOMINACION	TEXTO	HEI 6/11	HEM 6/11	HEP 6/11	HEI 10/11	HEM 10/11	HEP 10/11		NOTAS
1	R092822000	TAPA VENTILACION MOTOR	FAN MOTOR COVER	1	1	1	1	1	1		
	Q221342000	REMACHE EXAGONAL M5	HEXAGONAL RIVET M5	4	4	4	4	4	4		
2	R662816000	PANEL POSTERIOR EXT HM-6-11	REAR PANEL EXT HM-6-11	1	1	1	_	_	_		
2	R672812000	PANEL POSTERIOR EXT HM-10-11	REAR PANEL EXT HM-10-11	_	_	_	1	1	1		
	Q221342000	REMACHE EXAGONAL M5	HEXAGONAL RIVET M5	4	4	4	4	4	4		
	Q152038000	TORNILLO AMARRE M5X30	FASTENING BOLT M5X30	4	4	4	4	4	4		
3	R672811000	CANALETA RECOGEAGUAS	WATER COLLECTOR PIPE	1	1	1	1	1	1		
	Q412002000	REMACHE AVINOX Ø4x10MM	RIVET AVINOX Ø4x10MM	3	3	3	3	3	3		
4	N503017000	SOPORTE TERMOSTATO 1001713	THERMOSTAT SUPPORT 100171	1	1	1	1	1	1		
5	R662813000	PASAMUROS CHIMENEA 101003361	FEEDTHROUGH FLUE PIPE 1010	1	1	1	1	1	1		
6	R662819000	CUERPO EXTERIOR DE HORNO	OVEN EXTERIOR BODY	1	1	1	_	_	_		
6	R672816000	CUERPO EXTERIOR 10/11 ELÉCT.	EXTERIOR BODY 10/11 ELECT.	_	_	_	1	1	1		
	Q152017000	TORNILLO AMARRE M6X13 A304	FASTENING BOLT M6X13 A304	8	8	8	8	8	8		
7	R662811000	FIJACION PORTAMANDOS	CONTROL HOLDER ATTACHMEN	1	1	1	1	1	1		
	Q412002000	REMACHE AVINOX Ø4x10MM	RIVET AVINOX Ø4x10MM	2	2	2	2	2	2		
8	R693093000	SERIGRAFIA HEI-6/11	SERIGRAPHY HEI-6 / 11	1	_	_	_	_	_		
8	R663097000	SERIGRAFIA HEM-6/11	SERIGRAPHY HEM-6/11	_	1	_	_	_	_		
8	R663098000	SERIGRAFIA HEP-6/11	SERIGRAPHY HEP-6/11	_	_	1	_	_	_		
8	R703042000	SERIGRAFIA HEI-10/11	SERIGRAPHY HEI-10 / 11	_	_	_	1	_	_		
8	R673067000	SERIGRAFIA HEM-10/11 20/11	SERIGRAPHY HEM-10/11 20/11	_	_	_	_	1	_		
8	R673068000	SERIGRAFIA HEP-10/11 20/11	SERIGRAPHY HEP-10/11 20/11	_	_	_	_	_	1		
9	R692815000	PORTAMANDOS COMPL. HEI-6/11	CONTROL HOLDER HEI-6/11	1	_	_	_	_	_		
9	R662831000	PORTAMANDOS COMPL. HEM-6/11	CONTROL HOLDER HEM-6/11	_	1	1	_	_	_		
9	R702806000	PORTAMANDOS COMP. HEI-10/11	CONTROL HOLDER HEI-10/11	_	_	_	1	_	_		
9	R672831000	PORTAMANDOS COMP. HEM-10/11	CONTROL HOLDER HEM-10/11	_	_	_	_	1	1		
	Q262040000	ARANDELA GROW. A6 A.304	WASHER GROW. A6 A.304	2	2	2	2	2	2		
	Q232040000	ARANDELA A6	WASHER A6	2	2	2	2	2	2		
	Q012042000	TORNILLO EXAGONAL M6x15	HEXAGONAL BOLT M6x15	2	2	2	2	2	2		
10	3715400000	JUNTA PANEL PORTAMANDOS	SEAL CONTROL HOLDER PANEL	3	3	3	3	3	3		

MOD.	HORNOS	ZONA	MUEBLE	PLANO	C-1959

ITEM	CODIGO	DENOMINACION	TEXTO	HEI 6/11	HEM 6/11	HEP 6/11	HEI 10/11	HEM 10/11	HEP 10/11		NOTAS
11	R675002000	SUPLEMENTO DUCHA	SHOWER SUPPLEMENT	_	1	1	_	1	1		
	Q306039000	ARANDELA JUNTA 23,8X16,2X1,5	WASHER SEAL 23.8X16.2X1.5	_	1	1	_	1	1		
	Q012042000	TORNILLO EXAGONAL M6x15	HEXAGONAL BOLT M6x15	_	1	1	_	1	1		
12	R095009000	DUCHA COMPLETA	COMPLETE SHOWER	_	1	1	_	1	1		
	Q042022000	TORNILLO AVELLANADO M4x15	COUNTERSUNK BOLT M4x15	_	3	3	_	3	3		

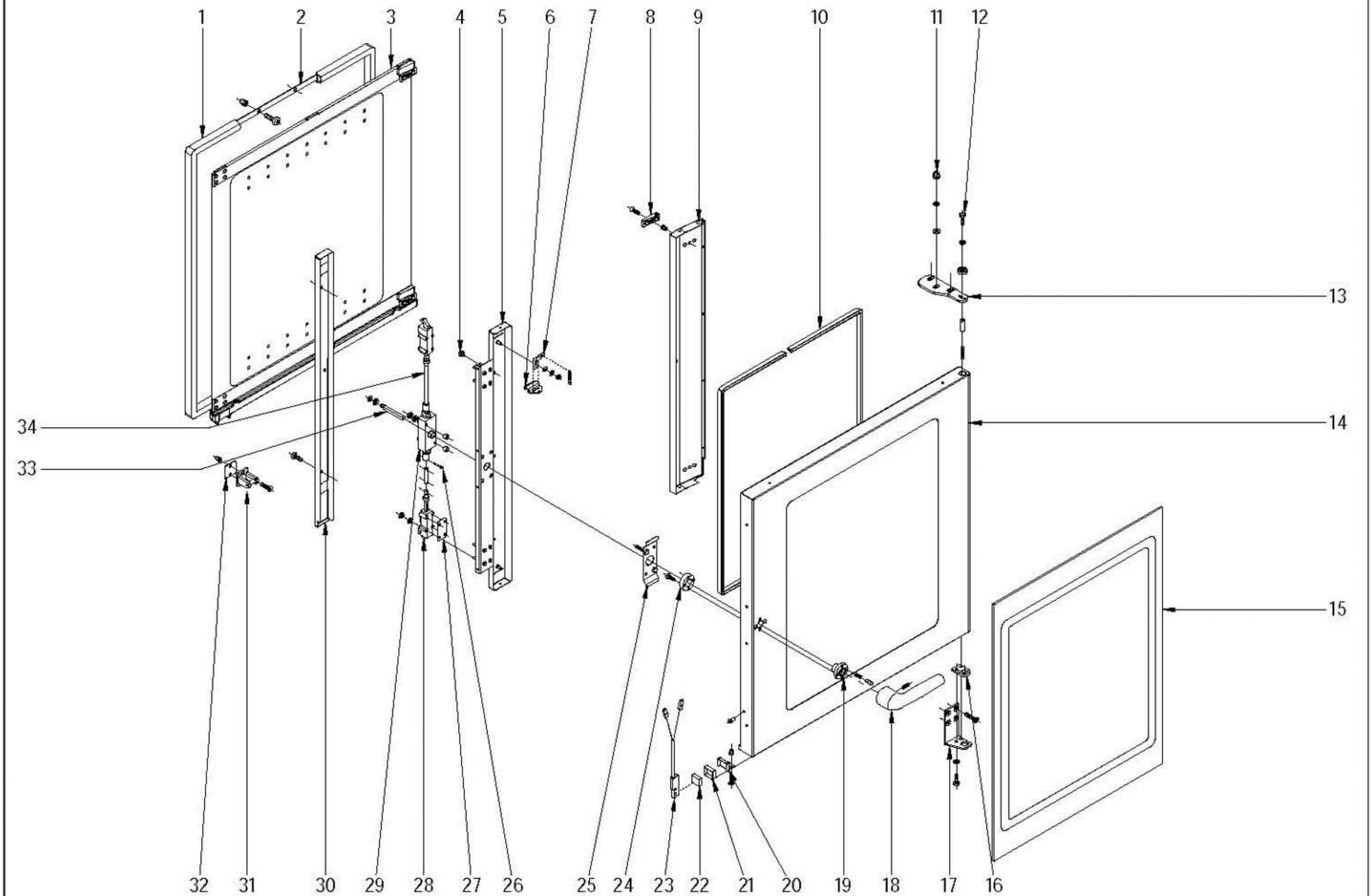

N plano	Firma	Fecha	Aparato	PUERTA	Lamina	
C-1960		2008-02	HORNOS HEI; HEM; HEP 6/11-10/11		2	Fagor Industrial S.Coop. FAGOR Onate

MOD.	HORNOS	ZONA	PUERTA	PLANO	C-1960

ITEM	CODIGO	DENOMINACION	TEXTO	HEI 6/11	HEM 6/11	HEP 6/11	HEI 10/11	HEM 10/11	HEP 10/11		NOTAS
	1100003129	**KIT PUERTA 6/11 COMPLETA**	**DOOR KIT 6/11 COMPLETE**	1	1	1	_	_	_		
	1100003131	**KIT PUERTA 10/11 COMPLETA**	**DOOR KIT 10/11 COMPLETE**	_	_	_	1	1	1		
1	R660503000	JUNTA DE PUERTA 6-11	DOOR SEAL 6-11	1	1	1	_	_	_		
1	R670500000	JUNTA DE PUERTA 10-11	DOOR SEAL 10-11	_	_	_	1	1	1		
2	R660526000	FIJACION JUNTA COMPLETA 6-11	COMPLETE SEAL ATTACHMENT	1	1	1	_	_	_		
2	R670513000	FIJACION JUNTA COMPLETA 10-11	COMPLETE SEAL ATTACHMENT	_	_	_	1	1	1		
	Q032021000	TORNILLO ALOMADO M4X10	CURVED SCREW M4X10	28	28	28	28	28	28		
	Q222041000	REMACHE EXAGONAL M4 (INOX)	HEXAGONAL RIVET M4 (INOX)	28	28	28	28	28	28		
3	**1100003130**	**KIT CRISTAL INTER. 6/11 COMPL.**	**INTER. GLASS KIT 6/11 COMP.**	1	1	1	_	_	_		
3	**1100003132**	**KIT CRISTAL INTER. 10/11 COMPL.**	**INTER. GLASS KIT 10/11 COMP.**	_	_	_	1	1	1		
4	R670617000	TOPE CRISTAL INTERIOR 10/11	INTERIOR GLASS BUFFER 10/11	5	5	5	6	6	6		
5	R660616000	CONTRAPUERTA MANILLA 6/11	DOOR REVERSE HANDLE 6/11	1	1	1	_	_	_		
5	R670633000	CONTRAPUERTA MANILLA 10/11	DOOR REVERSE HANDLE 10/11	_	_	_	1	1	1		
6	R670613000	PESTILLO 10/11	LATCH 10/11	2	2	2	2	2	2		
7	R670612000	BASE DE PESTILLO	LATCH BASE	2	2	2	2	2	2		
	Q302022000	ARANDELA 16X6X1.2 A.304	WASHER 16X6X1.2 A.304	2	2	2	2	2	2		
	Q162040000	TUERCA EXAGONAL M6	HEXAGONAL NUT M6	2	2	2	2	2	2		
	Q242040000	ARANDELA ABANICO A6 A.304	FAN WASHER A6 A.304	2	2	2	2	2	2		
	R660605000	MUELLE TENSOR	TENSIONING SPRING	2	2	2	2	2	2		
8	R670615000	BASE DE BISAGRA	HINGE BASE	2	2	2	2	2	2		
	Q222011000	REMACHE EXAGONAL M.5	HEXAGONAL RIVET M.5	2	2	2	2	2	2		
	Q042032000	TORNILLO AVELLANADO M5X15	COUNTERSUNK BOLT M5x15	2	2	2	2	2	2		
9	R660614000	CONTRAPUERTA BISAGRA 6/11	DOOR REVERSE HINGE 6/11	1	1	1	_	_	_		
9	R670631000	CONTRAPUERTA BISAGRA 10/11	DOOR REVERSE HINGE 10/11	_	_	_	1	1	1		
10	3715200000	JUNTA CRISTAL	WINDOW SEAL	2	2	2	2	2	2		
11	Q212051000	TUERCA SOMBRERETE M8	COWL NUT M8	3	3	3	3	3	3		
	Q242050000	ARANDELA ABANICO A8 A.304	FAN WASHER A8 A.304	3	3	3	3	3	3		
	Q302025000	ARANDELA 8,4x20x1,5 A.304	WASHER 8.4x20x1.5 A.304	3	3	3	3	3	3		
12	Q012042000	TORNILLO EXAGONAL M6x15	HEXAGONAL BOLT M6x15	1	1	1	1	1	1		
	Q242040000	ARANDELA ABANICO A6 A.304	FAN WASHER A6 A.304	1	1	1	1	1	1		
	R662807000	ARANDELA AMARRE	ANCHORAGE WASHER	1	1	1	1	1	1		

MOD.	HORNOS	ZONA	PUERTA	PLANO	C-1960

ITEM	CODIGO	DENOMINACION	TEXTO	HEI 6/11	HEM 6/11	HEP 6/11	HEI 10/11	HEM 10/11	HEP 10/11		NOTAS
13	T130500000	BISAGRA SUPERIOR	UPPER HINGE	1	1	1	1	1	1		
	R660534000	EJE SUPERIOR	UPPER SHAFT	1	1	1	1	1	1		
	Z850519000	RESORTE 06329	SPRING 06329	1	1	1	1	1	1		
14	R660612000	PANEL PUERTA 6/11	DOOR PANEL 6/11	1	1	1	_	_	_		
14	R670629000	PANEL PUERTA 10-11	DOOR PANEL 10-11	_	_	_	1	1	1		
	Q412002000	REMACHE AVINOX Ø4x10MM	RIVET AVINOX Ø4x10MM	14	14	14	14	14	14		
15	R660610000	CRISTAL EXTERIOR 6/11	EXTERIOR GLASS 6/11	1	1	1	_	_	_		
15	R670627000	CRISTAL EXTERIOR 10/11	EXTERIOR GLASS 10/11	_	_	_	1	1	1		
16	R660549000	GUIA EJE INFERIOR FUNDIDO	LOWER SHAFT GUIDE, CAST IRC	1	1	1	1	1	1		
	Q062040000	TORNILLO AVELLANADO M6X16	COUNTERSUNK BOLT M6x16	4	4	4	4	4	4		
17	R660551500	BISAGRA INFERIOR PLEGADA	LOWER FOLDER HINGE	1	1	1	1	1	1		
	Q242040000	ARANDELA ABANICO A6 A.304	FAN WASHER A6 A.304	2	2	2	2	2	2		
	Q012041000	TORNILLO EXAGONAL M6x10 A304	HEXAGONAL BOLT M6x10 A304	2	2	2	2	2	2		
18	T130502000	MANILLA COMPLETA	COMPLETE HANDLE	1	1	1	1	1	1		
	Q132042000	VARILLA ROSCADA M6X15	THREADED ROD M6X15	1	1	1	1	1	1		
	T130510000	TAPON Ø 16 BAGAL Ext.	COVER Ø 16 BAGAL Ext.	1	1	1	1	1	1		
19	T130515000	GUIA MANILLA	HANDLE GUIDE	1	1	1	1	1	1		
	T130507000	PITON ENGANCHE PUERTA	DOOR FASTENER SPIKE	2	2	2	2	2	2		
	T130506000	RESORTE 34548	SPRING 34548	2	2	2	2	2	2		
20	T130513000	SOPORTE IMAN	MAGNET BRACKET	1	1	1	1	1	1		
	Q222011000	REMACHE EXAGONAL M.5	HEXAGONAL RIVET M.5	1	1	1	1	1	1		
	Q032031000	TORNILLO ALOMADO M5X10	CURVED SCREW M5X10	1	1	1	1	1	1		
21	Z200507000	PROTECTOR IMAN	MAGNET PROTECTOR	1	1	1	1	1	1		
22	Z200506000	IMAN	MAGNET	1	1	1	1	1	1		
23	Z100522000	INTERRUPTOR MAGNETICO	MAGNETIC SWITCH	1	1	1	1	1	1		
24	T130514000	SOPORTE RESORTE	SPRING SUPPORT	1	1	1	1	1	1		
	Q032032000	TORNILLO ALOMADO M5x15	CURVED SCREW M5X15	2	2	2	2	2	2		
25	T130511000	SUPLEMENTO SUJ. CERRADURA	ANCHORAGE SUPPL. LOCK	1	1	1	1	1	1		
26	Q352001000	PASADOR DE ALETAS 2X20	COTTER PIN 2X20	2	2	2	4	4	4		
27	T080503000	SUPLEMENTO ELEMENTO CIERRE	SUPPLEMENT LOCK ELEMENT	6	6	6	6	6	6		

MOD.	HORNOS	ZONA	PUERTA	PLANO	C-1960

ITEM	CODIGO	DENOMINACION	TEXTO	HEI 6/11	HEM 6/11	HEP 6/11	HEI 10/11	HEM 10/11	HEP 10/11		NOTAS
28	T080504000	ELEMENTO CIERRE	LOCK ELEMENT	2	2	2	2	2	2		
	Q262040000	ARANDELA GROW. A6 A.304	WASHER GROW. A6 A.304	6	6	6	8	8	8		
	Q162040000	TUERCA EXAGONAL M6	HEXAGONAL NUT M6	6	6	6	8	8	8		
29	T130509000	MECANISMO CIERRE	LOCK MECHANISM	1	1	1	1	1	1		
	Q262040000	ARAND.GROW. A6 A.304	WASHER GROW. A6 A.304	2	2	2	2	2	2		
	Q162040000	TUERCA EXAGONAL M6	HEXAGONAL NUT M6	2	2	2	2	2	2		
	Z608410000	CASQUILLO AMARRE TECLADO	KEYBOARD ANCHORAGE BUSHI	2	2	2	2	2	2		
30	T080502000	TAPA CIERRE PUERTA 6/11	DOOR LOCK COVER 6/11	1	1	1	_	_	_		
30	T110502000	TAPA CIERRE PUERTA 20/11	DOOR LOCK COVER 20/11	_	_	_	1	1	1		
	Q032021000	TORNILLO ALOMADO M4X10	CURVED SCREW M4X10	4	4	4	4	4	4		
	Q222041000	REMACHE EXAGONAL M4 (INOX)	HEXAGONAL RIVET M4 (INOX)	4	4	4	4	4	4		
31	T110506000	ENGANCHE PUERTA	DOOR FASTENER	2	2	2	2	2	2		
	Q043145000	TORN. AVELLANADO 6X30 LATON	HEXAGONAL BRASS COUNTERS	4	4	4	4	4	4		
32	R660538000	CALZO DE ENGANCHE	FASTENER WEDGE	6	6	6	6	6	6		
	Q221343000	REMACHE EXAGONAL M.6	HEXAGONAL RIVET M.6	4	4	4	4	4	4		
33	T130508000	EJE DE MANILLA PUERTA	DOOR HANDLE SHAFT	1	1	1	1	1	1		
	T130505000	CASQUILLO	BUSHING	1	1	1	1	1	1		
34	R020502000	TUBO ALARGADERA 10-11	EXTENSION PIPE 10-11	_	_	_	2	2	2		

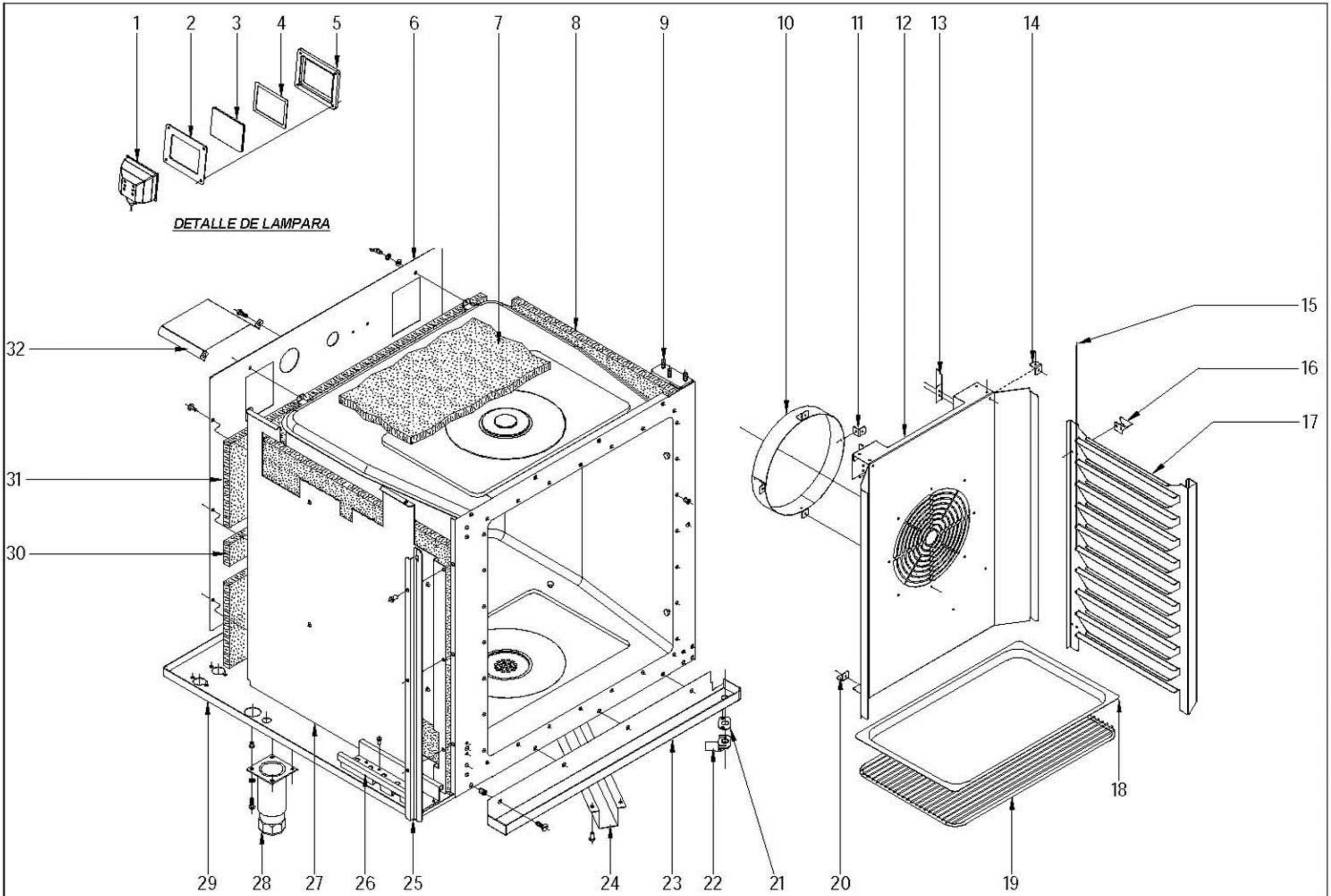

N plano	Firma	Fecha	Aparato	Lamina	
C-1961		2008-02	MUEBLE INTERIOR HORNOS HEI; HEM; HEP 6/11-10/11	3	Fagor Industrial S.Coop. FAGOR Oñate

MOD.	HORNOS	ZONA	MUEBLE INTERIOR	PLANO	C-1961

ITEM	CODIGO	DENOMINACION	TEXTO	HEI 6/11	HEM 6/11	HEP 6/11	HEI 10/11	HEM 10/11	HEP 10/11		NOTAS
1	T303023000	PORTALAMPARAS	LAMP HOLDER	1	1	1	1	1	1		
2	T303026000	JUNTA EXTERIOR LAMPARA	LAMP EXTERIOR SEAL	1	1	1	1	1	1		
3	T303025000	CRISTAL LAMPARA	LAMP GLASS	1	1	1	1	1	1		
4	T303027000	JUNTA INTERIOR LAMPARA	LAMP INTERIOR SEAL	1	1	1	1	1	1		
5	T303047000	MARCO LAMPARA	LAMP FRAME	1	1	1	1	1	1		
	R663013000	LAMPARA 10W-12V	LAMP 10W-12V	1	1	1	1	1	1		
	Q222041000	REMACHE EXAGONAL M.4 INOX	HEXAGONAL RIVET M4 (INOX)	4	4	4	4	4	4		
	Q032021000	TORNILLO ALOMADO M4X10	CURVED SCREW M4X10	4	4	4	4	4	4		
6	R662655000	SOPORTE AISLANTE POST. 6-11	REAR INSULATION SUPPORT 6-1	1	1	1	_	_	_		
6	R672608000	SOPORTE AISLANTE POST. 10/11	REAR INSULATION SUPPORT 10/	_	_	_	1	1	1		
	Q151301000	PHILIPS 8X5/8	PHILIPS 8X5/8	3	3	3	3	3	3		
	Q012042000	TORNILLO EXAGONAL M6x15	HEXAGONAL BOLT M6x15	12	12	12	12	12	12		
	Q262040000	ARANDELA GROW. A6 A.304	WASHER GROW. A6 A.304	12	12	12	12	12	12		
	Q232040000	ARANDELA A6	WASHER A6	12	12	12	12	12	12		
	Q221343000	REMACHE EXAGONAL M.6	HEXAGONAL RIVET M.6	6	6	6	6	6	6		
7	R662614000	AISLANTE 650X650X20	INSULATION 650X650X20	5	5	5	5	5	5		
8	R662613000	AISLANTE 650X530X20	INSULATION 650X530X20	5	5	5	_	_	_		
8	R672630000	AISLANTE 770X650X20	INSULATION 770X650X20	_	_	_	5	5	5		
9	R692618000	CUERPO COMPLETO HEI 6/11	COMPLETE BODY HEI 6/11	1	_	_	_	_	_		
9	R662697000	CUERPO COMPLETO HEM 6/11	COMPLETE BODY HEM 6/11	_	1	1	_	_	_		
9	R702609000	CUERPO COMPLETO HEI 10/11	COMPLETE BODY HEI 10/11	_	_	_	1	_	_		
9	R672609000	CUERPO INTERIOR HEM-10/11	INNER BODY HEM-10/11	_	_	_	_	1	1		
	R662636000	REFUERZO BASE CUERPO INTER.	REINFORCEMENT BASE INTER. E	1	1	1	1	1	1		
	Q162040000	TUERCA EXAGONAL M6	HEXAGONAL NUT M6	8	8	8	8	8	8		
	Q232040000	ARANDELA A6	WASHER A6	8	8	8	8	8	8		
	Q262040000	ARANDELA GROW. A6 A.304	WASHER GROW. A6 A.304	8	8	8	8	8	8		
	Q222041000	REMACHE EXAGONAL M4 (INOX)	HEXAGONAL RIVET M4 (INOX)	28	28	28	28	28	28		
10	T132644000	SUPLEMENT. CUBREVENTILADOR	SUPPLEMENT. FAN COVER	1	1	1	1	1	1		
S/Nº	T322607000	REDUCC. CUBREVENT. 60HzD160	FANCOVER REDUC. 60HzD160	1	1	1	1	1	1		SOLO HORNOS A 60 HZ
11	T302643000	FIJACIÓN SUPLEMENTO	SUPPLEMENTARY FASTENING	4	4	4	4	4	4		
	Q412002000	REMACHE AVINOX Ø4x10MM	RIVET AVINOX Ø4x10MM	8	8	8	8	8	8		

MOD.	HORNOS	ZONA	MUEBLE INTERIOR	PLANO	C-1961

ITEM	CODIGO	DENOMINACION	TEXTO	HEI 6/11	HEM 6/11	HEP 6/11	HEI 10/11	HEM 10/11	HEP 10/11		NOTAS
12	R692615000	CUBREVENTILADOR 6/11	FAN COVER 6/11	1	1	1	_	_	_		
12	R672611000	CUBREVENTILADOR 10/11	FAN COVER 10/11	_	_	_	1	1	1		
	Q152014000	PERNO SOLD.M5X10	WELDED ROD M5X10	2	2	2	2	2	2		
13	R092677000	ESCUADRA SUJECCION	FASTENING BRACKET	2	2	2	2	2	2		
	Q412002000	REMACHE AVINOX Ø4x10MM	RIVET AVINOX Ø4x10MM	6	6	6	6	6	6		
14	R092680000	FIJACIÓN SUPLEMENTO DOBLE	DOUBLE SUPPLEMENT ATTACHM	2	2	2	_	_	_		
14	T302643000	FIJACIÓN SUPLEMENTO	SUPPLEMENTARY FASTENING	_	_	_	2	2	2		
	Q412002000	REMACHE AVINOX Ø4x10MM	RIVET AVINOX Ø4x10MM	4	4	4	4	4	4		
15	R662693000	TOPE PORTABANDEJAS 6/11	TRAY HOLDER BUFFER 6/11	2	2	2	_	_	_		
15	R672692000	TOPE PORTABANDEJAS 10/11	TRAY HOLDER BUFFER 10/11	_	_	_	2	2	2		
16	R672691000	ESCUADRA SUJECCION 6-10/11	FASTENING BRACKET 6-10/11	4	4	4	4	4	4		
17	R692616000	GUIA BANDEJAS DERECHA 6/11	RIGHT TRAY GUIDE 6/11	1	1	1	_	_	_		
17	R672612000	GUIA BANDEJAS DERECHA 10/11	RIGHT TRAY GUIDE 10/11	_	_	_	1	1	1		
S/Nº	R692617000	GUIA BANDEJAS IZQUIERDA 6/11	LEFT TRAY GUIDE 6/11	1	1	1	_	_	_		
S/Nº	R672613000	GUIA BANDEJAS IZQUIERDA 10/11	LEFT TRAY GUIDE 10/11	_	_	_	1	1	1		
18	R252816000	BANDEJA 1/1 P:20	TRAY 1/1 P:20	1	1	1	1	1	1		
19	R672665000	PARRILLA 1X1 (REF. 2025201)	GRILLE 1X1 (REF. 2025201)	1	1	1	1	1	1		
20	T302643000	FIJACIÓN SUPLEMENTO	SUPPLEMENTARY FASTENING	_	_	_	2	2	2		
	Q412002000	REMACHE AVINOX Ø4x10MM	RIVET AVINOX Ø4x10MM	_	_	_	4	4	4		
21	T302845000	JUNTA RECOGEAGUAS	WATER COLLECTOR SEAL	1	1	1	1	1	1		
	Q242030000	ARANDELA ABANICO A5 A.304	FAN WASHER A5 A.304	2	2	2	2	2	2		
	Q213131000	TUERCA SOMBRERETE M5	COWL NUT M5	2	2	2	2	2	2		
22	T302844000	DESAGÜE RECOGEAGUAS	WATER COLLECTOR DRAIN	1	1	1	1	1	1		
23	T112852000	RECOGEAGUAS COMPL. 6 10/11	COMPL. WATER COLLECTOR 6 1	1	1	1	1	1	1		
	Q221343000	REMACHE EXAGONAL M6	HEXAGONAL RIVET M6	4	4	4	4	4	4		
	Q152017000	TORNILLO AMARRE M6X13 A304	FASTENING BOLT M6X13 A304	4	4	4	4	4	4		
24	R672833000	CUBRE DESAGUE 6/11 10/11	DRAIN COVER 6/11 10/11	1	1	1	1	1	1		
25	R662682000	PROTECTOR PORTAMANDOS 6-11	CONTROL HOLDER PROTECTOF	1	1	1	_	_	_		
25	R672674000	PROTECCION PORTAMANDOS	CONTROL HOLDER PROTECTOR	_	_	_	1	1	1		
	Q412002000	REMACHE AVINOX Ø4x10MM	RIVET AVINOX Ø4x10MM	3	3	3	3	3	3		

MOD.	HORNOS	ZONA	MUEBLE INTERIOR	PLANO	C-1961

ITEM	CODIGO	DENOMINACION	TEXTO	HEI 6/11	HEM 6/11	HEP 6/11	HEI 10/11	HEM 10/11	HEP 10/11		NOTAS
26	R342802000	GUIA CUADRO ELECTRICO "	SWITCHBOARD GUIDE"	1	1	1	1	1	1		
	Q412002000	REMACHE AVINOX Ø4x10MM	RIVET AVINOX Ø4x10MM	8	8	8	8	8	8		
27	T072614000	SOPORTE LATER. AISLANTE 6-11	SIDE SUPPORT INSULATION 6-11	1	1	1	_	_	_		
27	T112624000	SOPORTE LATER. AISLANTE 10/11	SIDE SUPPORT INSULATION 10/1	_	_	_	1	1	1		
28	X260151000	PATA REGULABLE	ADJUSTABLE LEG	4	4	4	4	4	4		
	Q221343000	REMACHE EXAGONAL M6	HEXAGONAL RIVET M6	16	16	16	16	16	16		
	Q242040000	ARANDELA ABANICO A6 A.304	FAN WASHER A6 A.304	16	16	16	16	16	16		
	Q012042000	TORNILLO EXAGONAL M6x15	HEXAGONAL BOLT M6x15	16	16	16	16	16	16		
29	R665077000	BASE EXTERIOR DE HORNO 10/11	OVEN OUTER BASE 10 / 11	1	1	1	1	1	1		
30	R662616000	AISLANTE 560X60X20	INSULATION 560X60X20	3	3	3	3	3	3		
31	R662615000	AISLANTE 800X110X20	INSULATION 800X110X20	2	2	2	_	_	_		
31	R672631000	AISLANTE 670X200X20	INSULATION 670X200X20	_	_	_	2	2	2		
32	T142635000	TEJADILLO MOTOR	MOTOR ROOF	1	1	1	1	1	1		

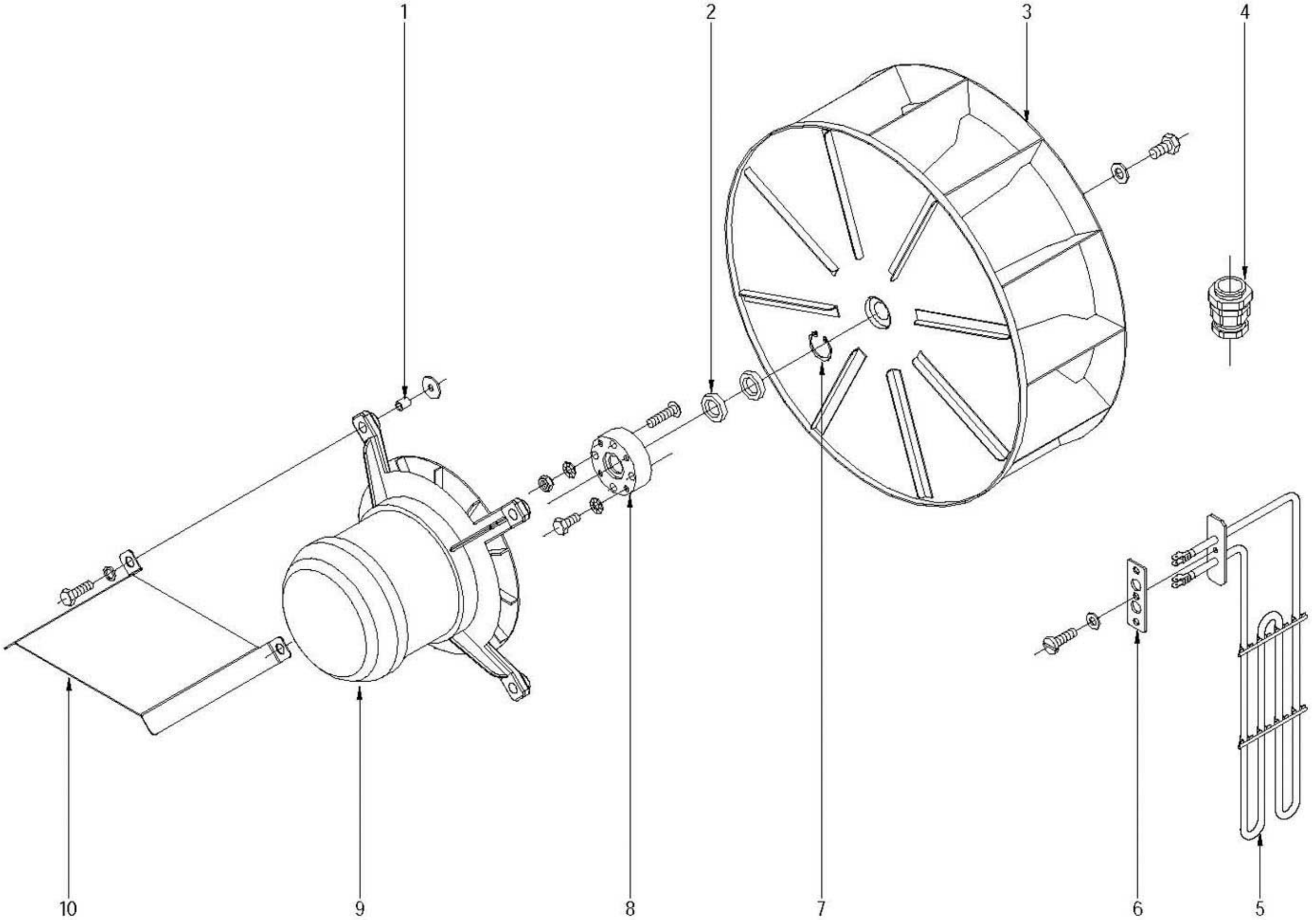

N plano	Firma	Fecha	Aparato	Lamina	
C-1962		2008-02	TURBINA HORNOS HEI; HEM; HEP 6/11-10/11	4	Fagor Industrial S.Coop. Oñate

MOD.	HORNOS	ZONA	TURBINA	PLANO	C-1962

ITEM	CODIGO	DENOMINACION	TEXTO	HEI 6/11	HEM 6/11	HEP 6/11	HEI 10/11	HEM 10/11	HEP 10/11		NOTAS
1	R663057000	CASQUILLO AMARRE MOTOR	MOTOR FASTENING BUSHING	_	4	4	_	4	4		
	Q301304000	ARANDELA PLANA 23X6.5X2	FLAT WASHER 23X6.5X2	4	4	4	4	4	4		
2	R662627000	RETEN 17X28X7V	SEAL 17X28X7V	2	2	2	2	2	2		
3	R703050000	TURBINA REC Ø350X127 HANNING	STRAIGHT FAN Ø350X127 HANNI	1	_	_	1	_	_		
3	T493017000	TURBINA RECTA Ø350X127 FIR	STRAIGHT FAN Ø350X127 FIR	_	1	1	_	1	1		
	R763010000	ARANDELA SEGURIDAD HANNING	SAFETY WASHER HANNING	1	1	1	1	1	1		
	Q012063000	TORNIL. EXAGONAL M10X20 A.304	HEXAGONAL BOLT M10X20 A.304	1	1	1	1	1	1		
4	R033002000	PRENSA ESTOPAS	STUFFING BOX	1	1	1	1	1	1		
5	R663016000	RESISTENCIA CONVECCION 230V.	CONVECTION RESISTOR 230V.	6	6	6	_	_	_		
5	R673002000	RESISTENCIA CONVECCION	CONVECTION RESISTOR	_	_	_	6	6	6		
6	R693017000	JUNTA RESISTENCIAS 6-11	RESISTOR SEAL 6-11	6	6	6	_	_	_		
6	R673063000	JUNTA RESISTENCIAS 10-11	RESISTOR SEAL 10-11	_	_	_	6	6	6		
	Q232040000	ARANDELA A6	WASHER A6	18	18	18	18	18	18		
	Q242040000	ARANDELA ABANICO A6 A.304	FAN WASHER A6 A.304	18	18	18	18	18	18		
	Q012042000	TORNILLO EXAGONAL M6x15	HEXAGONAL BOLT M6x15	18	18	18	18	18	18		
7	Q302023000	ANILLO DE SEGURIDAD Ø 28X1.2	SAFETY RING Ø 28X1.2	1	1	1	1	1	1		
8	R662684000	CASQUILLO RETEN	SEAL BUSHING	1	1	1	1	1	1		
	R662685000	JUNTA CASQUILLO RETEN	SEAL BUSHING GASKET	1	1	1	1	1	1		
	Q262040000	ARANDELA GROW. A6 A.304	WASHER GROW. A6 A.304	4	4	4	4	4	4		
	Q162040000	TUERCA EXAGONAL M6	HEXAGONAL NUT M6	4	4	4	4	4	4		
	Q232040000	ARANDELA A6	WASHER A6	4	4	4	4	4	4		
	Q262040000	ARANDELA GROW. A6 A.304	WASHER GROW. A6 A.304	4	4	4	4	4	4		
	Q162040000	TUERCA EXAGONAL M6	HEXAGONAL NUT M6	4	4	4	4	4	4		
9	R703049000	MOTOR DOBLE GIRO 1VEL.450W.	DOUBLE ROTATION MOTOR 1VE	1	_	_	1	_	_		
9	T493003000	MOTOR 20/21 2V 400V	MOTOR 20/21 2V 400V.	_	1	1	_	1	1		
9	T493004000	MOTOR 20/21 2V 230V.	MOTOR 20/21 2V 230V.	_	1	1	_	1	1		
	Q012046000	TORN.EXA. M6X40 A.304	HEX BOLT M6X40 A.304	4	4	4	4	4	4		
	Q242050000	ARANDELA ABANICO A8 A.304	FAN WASHER A8 A.304	4	4	4	4	4	4		
	Q162050000	TUERCA EXAGONAL M8x1 INOX.	HEXAGONAL NUT M8x1 INOX.	4	4	4	4	4	4		
10	T142635000	TEJADILLO MOTOR	MOTOR ROOF	1	1	1	1	1	1		

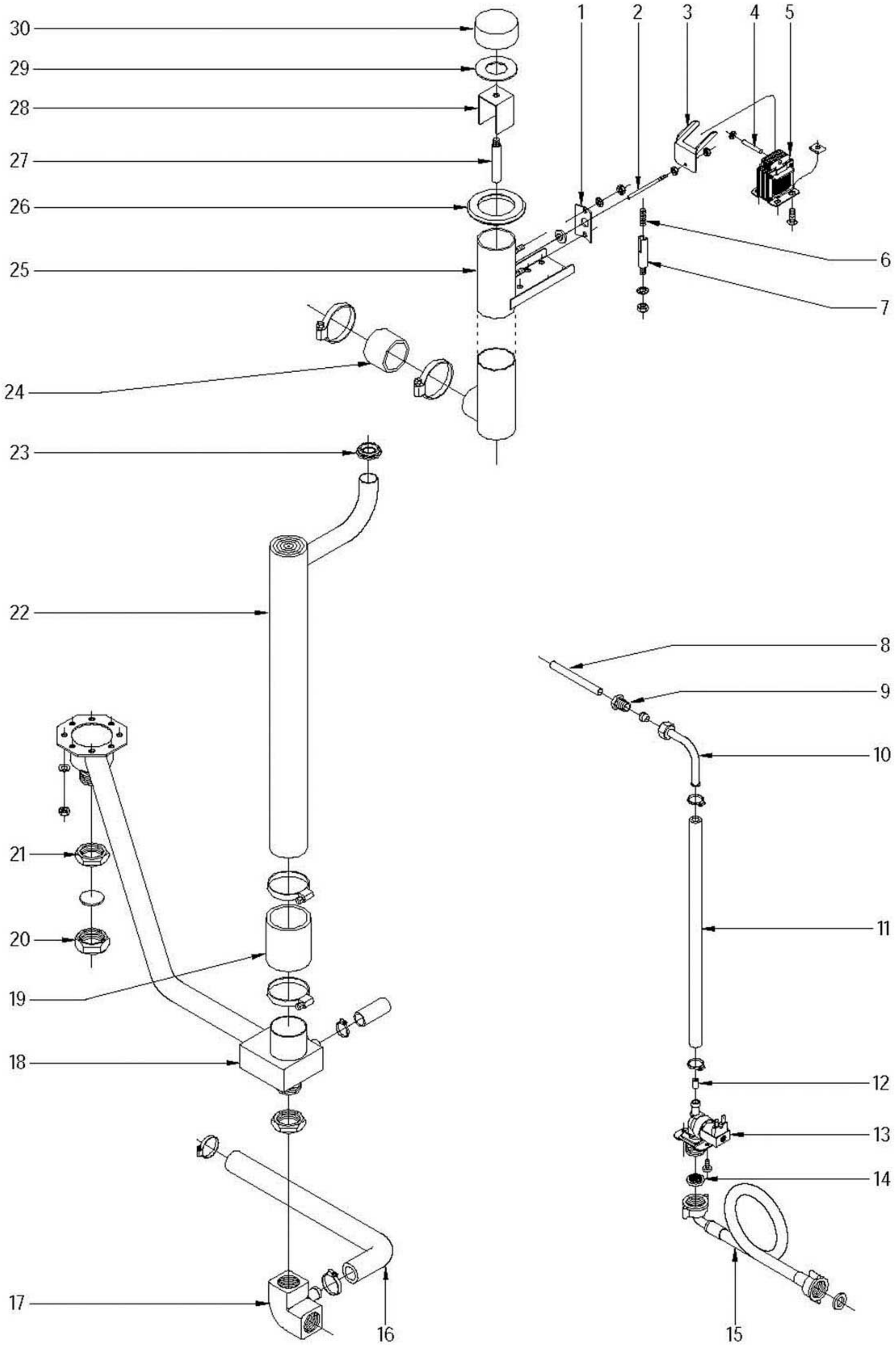

N plano	Firma	Fecha	Aparato		Lamina	
C-1963		2008-02	CIRCUITO DE AGUA HORNOS HEI-6/11; 10/11		5	Fagor Industrial S.Coop. Onate

MOD.	HORNOS	ZONA	CIRCUITO DE AGUA	PLANO	C-1963

ITEM	CODIGO	DENOMINACION	TEXTO	HEI 6/11	HEI 10/11						NOTAS
1	T115105000	AMARRE CONDUCCION VAHOS	VAPOUR DUCT FASTENING	1	1						
	R675033000	JUNTA PALANCA ACCIONAMIENTO	DRIVE LEVER SEAL	1	1						
	Q242030000	ARANDELA ABANICO A5 A.304	FAN WASHER A5 A.304	2	2						
	Q162030000	TUERCA EXAGONAL M5	HEXAGONAL NUT M5	2	2						
2	R675014000	PALANCA ACCIONAMIENTO	DRIVE LEVER	1	1						
3	R672640000	ESCUADRA ACCIONAMIENTO	DRIVE BRACKET	1	1						
	Q162020000	TUERCA EXAGONAL M4	HEXAGONAL NUT M4	2	2						
	Q242020000	ARANDELA ABANICO A4 A.304	FAN WASHER A4 A.304	1	1						
4	R675016000	PASADOR ELECTROIMAN	ELECTROMAGNET PIN	1	1						
	Q301035000	SUJECCION RAPIDA Ø4	RAPID FASTENING Ø4	2	2						
5	R663030000	ELECTROIMAN JOVE TIPO 501	ELECTROMAGNET JOVE TYPE 5(	1	1						
	Q221009000	TUERCA RAPIDA SEGURID. AC.RE	RAPID SAFETY NUT AC.RE	2	2						
	Q152004000	TORNILLO APLAST. M5X13 A 304	MUSHROOM HEAD BOLT M5X13	2	2						
6	Z883001000	RESORTE 20153	SPRING 20153	1	1						
7	R665027000	GUIA RESORTE	SPRING GUIDE	1	1						
	Q242040000	ARANDELA ABANICO A6 A.304	FAN WASHER A6 A.304	1	1						
	Q162040000	TUERCA EXAGONAL M6	HEXAGONAL NUT M6	1	1						
8	R695033000	TUBO INYECTOR 6/11	INJECTOR PIPE 6/11	1	1						
9	R695003000	MANGUITO CIERRE	CLOSING SLEEVE	1	1						
	R695004000	BICONO	BICONE	1	1						
10	R695017000	TUBO CONDUCCION AGUA	WATER DUCT PIPE	1	1						
11	3676900000	TUBO GOMA NEGRA Ø17*10	BLACK RUBBER PIPE Ø17*10	1	1						
	Q881302000	ABRAZADERA ELASTICA 12*20	ELASTIC CLAMP 12*20	2	2						
12	R665041000	REGULADOR 0,25L. ROJO	REGULATOR 0.25L. RED	1	1						
13	Z701135000	ELECT. SIMPLE 220V COD.255.208	ELECT. SIMPLE 220V COD.255.20	1	1						
	Q032021000	TORNILLO ALOMADO M4x10	CURVED SCREW M4X10	4	4						
14	Z701132000	FILTRO DE JUNTA N-3	SEAL FILTER N-3	1	1						
15	Z601114000	MANGUERA ENTRADA AGUA	WATER INTAKE HOSE	1	1						
16	3715600000	TUBO SILICONA 26X18	SILICONE PIPE 26X18	1	1						
	Q881305000	ABRAZADERA 25-40	CLAMP 25-40	2	2						

MOD.	HORNOS	ZONA	CIRCUITO DE AGUA	PLANO	C-1963

ITEM	CODIGO	DENOMINACION	TEXTO	HEI 6/11	HEI 10/11						NOTAS
17	R665080000	CODO DESAGÜE	DRAINAGE L-BEND	1	1						
18	R695032000	TUBO DESAGÜE COMP. HEI 6/11	COMP. DRAINAGE PIPE HEI6/11	1	1						
19	R345020000	TUBO EMPALME	CONNECTION PIPE	1	1						
	Q881307000	ABRAZADERA 40-60	CLAMP 40-60	2	2						
20	R665053000	TUERCA TAPON 1"	PLUG NUT 1"	1	1						
	R015011000	ARANDELA Ø32	WASHER Ø32	1	1						
21	Q223014000	CONTRATUERCA 1 LATON	COUNTERNUT 1 BRASS	2	2						
22	R695030000	CHIMENEA RETORNO HEI 6/11	FLUE PIPE RETURN HEI 6/11	1	_						
22	R705024000	CHIMENEA RETORNO HEI 10/11	FLUE PIPE RETURN HEI 10/11	_	1						
23	N503017000	SOPORTE TERMOSTATO 1001713	THERMOSTAT SUPPORT 100171	1	1						
24	3715800000	TUBO SILICONA Ø43*51	SILICONE TUBE Ø43*51	1	1						
	Q881307000	ABRAZADERA 40-60	CLAMP 40-60	2	2						
25	R695008000	CONJUNTO CHIMENEA HMI	FLUE PIPE UNIT HMI	1	1						
26	R662813000	PASAMUROS CHIMENEA 101003361	FEEDTHROUGH FLUE PIPE 1010	1	1						
27	R675008000	UNION RETENCION VAPORES	STEAM RETAINER UNION	1	1						
28	R675005000	GUIA RETENCION VAPORES	STEAM RETAINER GUIDE	1	1						
29	R675007000	JUNTA RETENCION VAPORES	STEAM RETAINER SEAL	1	1						
30	R675006000	RETENCION DE VAPORES	STEAM RETAINER	1	1						

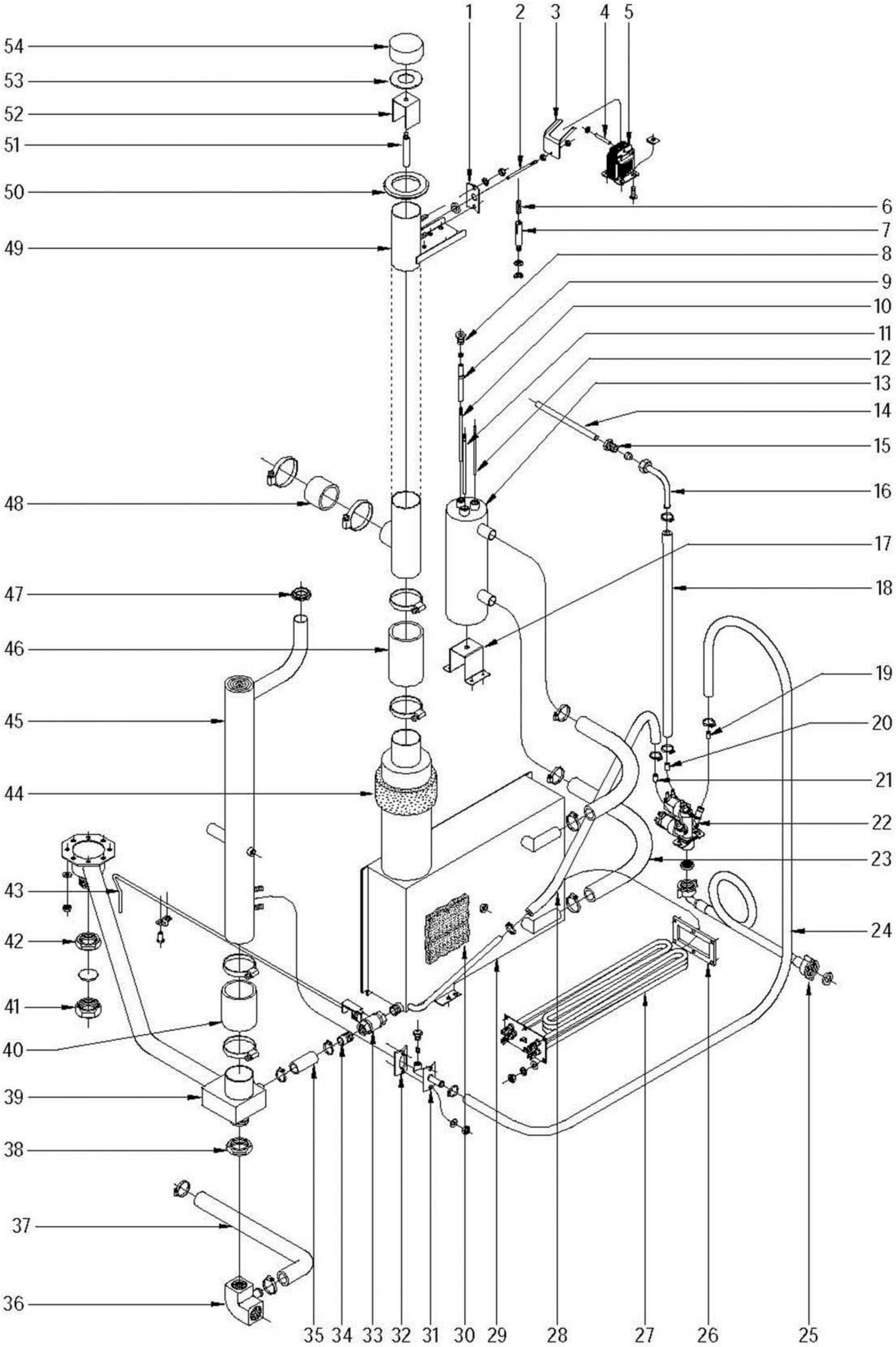

N plano	Firma	Fecha	Aparato	Lamina	
C-1964		2008-02	CIRCUITO DE AGUA HORNOS HEM; HEP 6/11-10/11	6	Fagor Industrial S.Coop. FAGOR Onate

MOD.	HORNOS	ZONA	CIRCUITO DE AGUA	PLANO	C-1964

ITEM	CODIGO	DENOMINACION	TEXTO	HEM 6/11	HEP 6/11	HEM 10/11	HEP 10/11				NOTAS
1	T115105000	AMARRE CONDUCCION VAHOS	VAPOUR DUCT FASTENING	1	1	1	1				
	R675033000	JUNTA PALANCA ACCIONAMIENTO	DRIVE LEVER SEAL	1	1	1	1				
	Q242030000	ARANDELA ABANICO A5 A.304	FAN WASHER A5 A.304	2	2	2	2				
	Q162030000	TUERCA EXAGONAL M5	HEXAGONAL NUT M5	2	2	2	2				
2	R675014000	PALANCA ACCIONAMIENTO	DRIVE LEVER	1	1	1	1				
3	R672640000	ESCUADRA ACCIONAMIENTO	DRIVE BRACKET	1	1	1	1				
	Q162020000	TUERCA EXAGONAL M4	HEXAGONAL NUT M4	2	2	2	2				
	Q242020000	ARANDELA ABANICO A4 A.304	FAN WASHER A4 A.304	1	1	1	1				
4	R675016000	PASADOR ELECTROIMAN	ELECTROMAGNET PIN	1	1	1	1				
	Q301035000	SUJECCION RAPIDA Ø 4	RAPID ATTACHMENT Ø 4	2	2	2	2				
5	R663030000	ELECTROIMAN JOVE TIPO 501	ELECTROMAGNET JOVE TYPE 5(	1	1	1	1				
	Q221009000	TUERCA RAPIDA SEGURID. AC.RE	RAPID SAFETY NUT AC.RE	2	2	2	2				
	Q152004000	TORNILLO APLAST. M5X13 A 304	MUSHROOM HEAD BOLT M5X13	2	2	2	2				
6	Z883001000	RESORTE 20153	SPRING 20153	1	1	1	1				
7	R665027000	GUIA RESORTE	SPRING GUIDE	1	1	1	1				
	Q242040000	ARANDELA ABANICO A6 A.304	FAN WASHER A6 A.304	1	1	1	1				
	Q162040000	TUERCA EXAGONAL M6	HEXAGONAL NUT M6	1	1	1	1				
8	R345058000	RACORD	CONNECTION	3	3	3	3				
	Q163020000	TUERCA EXAGONAL M4	HEXAGONAL NUT M4	6	6	6	6				
9	R345059000	GUIA AISLANTE	INSULATION GUIDE	3	3	3	3				
10	R345063000	ELECTRODO NIVEL BAJO	LOW LEVEL ELECTRODE	1	1	1	1				
11	R345064000	ELECTRODO DE MASA	EARTH ELECTRODE	1	1	1	1				
12	R345060000	ELECTRODO NIVEL ALTO	HIGH LEVEL ELECTRODE	1	1	1	1				
13	T325040000	CUERPO NIVELES COMPLETO	COMPLETE LEVELS BODY	1	1	1	1				
	Q232040000	ARANDELA A6	WASHER A6	1	1	1	1				
	Q262040000	ARANDELA GROW. A6 A.304	WASHER GROW. A6 A.304	1	1	1	1				
	Q162040000	TUERCA EXAGONAL M6	HEXAGONAL NUT M6	2	2	2	2				
14	R695033000	TUBO INYECTOR	INJECTOR PIPE	1	1	1	1				
15	R695003000	MANGUITO CIERRE	CLOSING SLEEVE	1	1	1	1				
	R695004000	BICONO	BICONE	1	1	1	1				
16	R695017000	TUBO CONDUCCION AGUA	WATER DUCT PIPE	1	1	1	1				

MOD.	HORNOS	ZONA	CIRCUITO DE AGUA	PLANO	C-1964

ITEM	CODIGO	DENOMINACION	TEXTO	HEM 6/11	HEP 6/11	HEM 10/11	HEP 10/11				NOTAS
17	R025032000	CHAPA CUERPO NIVELES E102011	PLATE BODY LEVELS E102011	_	_	1	1				
18	3676900000	TUBO GOMA NEGRA Ø17*10	BLACK RUBBER PIPE Ø17*10	1	1	1	1				
	Q881302000	ABRAZADERA ELASTICA 12*20	ELASTIC CLAMP 12*20	2	2	2	2				
19	P443042000	REGULADOR 3L. VERDE 254.023	REGULATOR 3L. GREEN 254.023	1	1	1	1				
20	R665041000	REGULADOR 0,25L. ROJO	REGULATOR 0.25L. RED	1	1	1	1				
21	Z601156000	REGULADOR 8L RO. 254.034	REGULATOR 8L RED 254.034	1	1	1	1				
22	Z611123000	ELECTROV. TRIPLE COD.255.641	SOLENOID TRIPLE ELBOW.255,6	1	1	1	1				
	Q032021000	TORNILLO ALOMADO M4x10	CURVED SCREW M4X10	4	4	4	4				
23	3715600000	TUBO SILICONA FORRADO 26X18	LINED SILICONE TUBE 26X18	2	2	2	2				
	Q881304000	ABRAZADERA 20-32	CLAMP 20-32	4	4	4	4				
24	3676900000	TUBO GOMA NEGRA Ø17*10	BLACK RUBBER PIPE Ø17*10	1	1	1	1				
	Q881302000	ABRAZADERA ELASTICA 12*20	ELASTIC CLAMP 12*20	2	2	2	2				
25	Z601114000	MANGUERA ENTRADA AGUA	WATER INTAKE HOSE	1	1	1	1				
	Z701132000	FILTRO DE JUNTA N-3	SEAL FILTER N-3	2	2	2	2				
26	R145012000	JUNTA CIERRE RESISTENCIAS	RESISTOR CLOSING SEAL	1	1	2	2				
27	R143000000	RESISTENCIA 3000WX3	RESISTOR 3000WX3	1	1	2	2				
	Q163030000	TUERCA EXAGONAL M5 LATON	HEXAGONAL NUT M5 BRASS	6	6	12	12				
	Q242030000	ARANDELA ABANICO A5 A.304	FAN WASHER A5 A.304	6	6	12	12				
28	3676900000	TUBO GOMA NEGRA Ø17*10	BLACK RUBBER PIPE Ø17*10	2	2	2	2				
	Q881302000	ABRAZADERA ELASTICA 12*20	ELASTIC CLAMP 12*20	4	4	4	4				
29	R665042000	GENERADOR DE VAPOR 6/11	STEAM GENERATOR 6/11	1	1	_	_				
29	R675024000	GENERADOR DE VAPOR 20/11	STEAM GENERATOR 20/11	_	_	1	1				
30	R665051000	AISLANTE GENERADOR E-6/11	GENERATOR INSULATION E-6/11	1	1	_	_				
30	R345011000	AISLANTE GENERADOR E-10-20/11	GENERATOR INSULATION E-10-2	_	_	1	1				
31	R015007000	CONDUCCION VAHOS COMPLETO	COMPLETE VAPOUR PIPE	1	1	1	1				
	Z651931000	TOBERA ACLARADO	RINSE NOZZLE	2	2	2	2				
	Z651932000	RODETE	RUNNER	2	2	2	2				
	Q162030000	TUERCA EXAGONAL M5	HEXAGONAL NUT M5	2	2	2	2				
	Q242030000	ARANDELA ABANICO A5 A.304	FAN WASHER A5 A.304	2	2	2	2				
32	R345108000	JUNTA DE VAHOS 5102805	VAPOUR SEAL 5102805	1	1	1	1				
33	R015034000	CUERPO GRIFO VACIADO	DRAINAGE TAP BODY	1	1	1	1				

MOD.	HORNOS	ZONA	CIRCUITO DE AGUA	PLANO	C-1964

ITEM	CODIGO	DENOMINACION	TEXTO	HEM 6/11	HEP 6/11	HEM 10/11	HEP 10/11				NOTAS
34	R345014000	MANGUITO GRIFO VACIADO	DRAINAGE TAP HOSE	1	1	1	1				
35	3715600000	TUBO SILICONA 26X18	SILICONE PIPE 26X18	1	1	1	1				
	Q881304000	ABRAZADERA 20-32	CLAMP 20-32	2	2	2	2				
36	R665080000	CODO DESAGÜE	DRAINAGE L-BEND	1	1	1	1				
37	3715600000	TUBO SILICONA 26X18	SILICONE PIPE 26X18	1	1	1	1				
	Q881305000	ABRAZADERA 25-40	CLAMP 25-40	2	2	2	2				
38	Q223014000	CONTRATUERCA 1 LATON	COUNTERNUT 1 BRASS	1	1	1	1				
39	R665076000	TUBO DESAGÜE COMPLETO	COMPLETE DRAINAGE PIPE	1	1	1	1				
40	R345020000	TUBO EMPALME	CONNECTION PIPE	1	1	1	1				
	Q881307000	ABRAZADERA 40-60	CLAMP 40-60	2	2	2	2				
41	R665053000	TUERCA TAPON 1"	PLUG NUT 1"	1	1	1	1				
	R015011000	ARANDELA Ø32	WASHER Ø32	1	1	1	1				
42	Q223014000	CONTRATUERCA 1 LATON	COUNTERNUT 1 BRASS	1	1	1	1				
43	R342803000	PALANCA GRIFO VACIADO	DRAIN TAP LEVER	1	1	1	1				
	Q901306000	GRAPA METALICA DOS PIES	METAL STAPLE TWO FEET	1	1	1	1				
	Q412002000	REMACHE AVINOX Ø4x10mm	RIVET AVINOX Ø4x10mm	2	2	2	2				
44	R665070000	AISLANTE SALIDA GENERADOR611	GENERATOR OUTPUT INSULATI	1	1	_	_				
44	T115066000	AISLANTE CHIMENEA 10-20/11	FLUE PIPE INSULATION 10-20/11	_	_	1	1				
45	R665079000	CHIMENEA RETORNO COM. 6/11	FLUE PIPE RETURN COM. 6/11	1	1	_	_				
45	R675044000	CHIMENEA RETORNO COM. 10/11	FLUE PIPE RETURN COM. 10/11	_	_	1	1				
46	R345020000	TUBO EMPALME	CONNECTION PIPE	1	1	1	1				
	Q881307000	ABRAZADERA 40-60	CLAMP 40-60	2	2	2	2				
47	N503017000	SOPORTE TERMOSTATO 1001713	THERMOSTAT SUPPORT 100171	1	1	1	1				
48	3715800000	TUBO SILICONA Ø43*51	SILICONE TUBE Ø43*51	1	1	1	1				
	Q881307000	ABRAZADERA 40-60	CLAMP 40-60	2	2	2	2				
49	R675019000	CONJUNTO CHIMENEA HME/M/P	FLUE PIPE UNIT HME/M/P	1	1	1	1				
50	R662813000	PASAMUROS CHIMENEA 101003361	FEEDTHROUGH FLUE PIPE 1010	1	1	1	1				
51	R675008000	UNION RETENCION VAPORES	STEAM RETAINER UNION	1	1	1	1				
52	R675005000	GUIA RETENCION VAPORES	STEAM RETAINER GUIDE	1	1	1	1				
53	R675007000	JUNTA RETENCION VAPORES	STEAM RETAINER SEAL	1	1	1	1				
54	R675006000	RETENCION DE VAPORES	STEAM RETAINER	1	1	1	1				

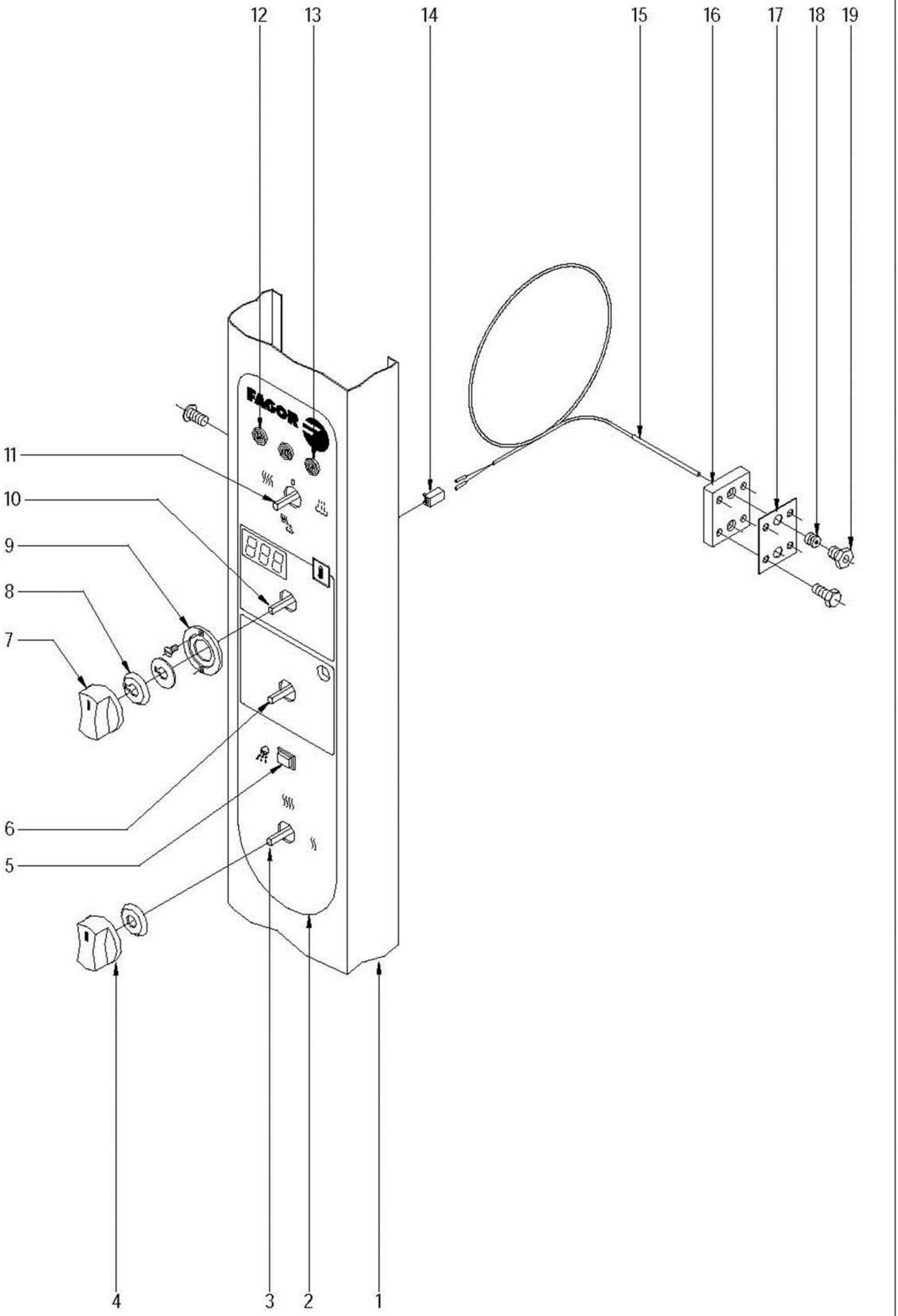

N plano	Firma	Fecha	Aparato	Lamina	
C-1965		2008-02	SISTEMA ELECTRICO PORTAMANDOS HORNOS HEI 6/11-10/11	7	Fagor Industrial S.Coop. FAGOR Onate

MOD.	HORNOS	ZONA	PARTE ELECTRICA PORTAMANDOS	PLANO	C-1965

ITEM	CODIGO	DENOMINACION	TEXTO	HEI 6/11	HEI 10/11						NOTAS
1	R692815000	PORTAMANDOS COMPL. HEI-6/11	CONTROL HOLDER HEI-6/11	1	_						
1	R702806000	PORTAMANDOS COMPL. HEI-10/11	CONTROL HOLDER HEI-10/11	_	1						
	Q152004000	TORNILLO APLAST. M5X13 A 304	MUSHROOM HEAD BOLT M5X13	3	3						
	R692806000	SOPORTE COMPONENTES HMI	COMPONENT SUPPORT HMI	1	1						
	R663036000	FIJACION CIRCUITO	CIRCUIT ATTACHMENT	4	4						
	R693011000	RESISTENCIA 1K8 4W	RESISTOR 1K8 4W	1	1						
2	R693093000	SERIGRAFIA HEI-6/11	SERIGRAPHY HEI-6 / 11	1	_						
2	R703042000	SERIGRAFIA HEI-10/11	SERIGRAPHY HEI-10 / 11	_	1						
3	R753000000	CONMUTADOR DE POTENCIA	POWER SWITCH	_	1						
4	R663062000	BOTÓN DE MANDO COMPLETO	COMPLETE CONTROL BUTTON	2	3						
	R663046000	JUNTA CONMUTADOR	SWITCH SEAL	2	3						
5	R663032000	PULSADOR L41M8M959F	BUTTON L41M8M959F	1	1						
6	R723000000	TEMPORIZADOR MANUAL	MANUAL TIMER	1	1						
7	R663063000	BOTON DE MANDO COMPLETO	COMPLETE CONTROL BUTTON	1	1						
8	R663045000	JUNTA POTENCIOMETRO	POTENTIOMETER SEAL	1	1						
	R662810000	ARANDELA GUIA	GUIDE WASHER	1	1						
9	R662809000	GUIA BOTON DE MANDO	CONTROL BUTTON GUIDE	1	1						
	Q151346000	TORNILLO AVELLANADO M3x5	COUNTERSUNK BOLT M3x5	2	2						
10	R743013000	TERMOSTATO ELECTRONICO 270ºC	ELECTRONIC THERMOSTAT 270	1	1						
11	R693004000	CONMUTADOR DE FUNCIONES	FUNCTIONS SWITCH	1	1						
12	R693056000	PILOTO AMBAR 41227000A4	AMBER PILOT 41227000A4	2	2						
13	R693055000	PILOTO VERDE 41227000C7	GREEN PILOT 41227000C7	1	1						
14	R663092000	CONECTOR 2 VIAS	2-WAY CONNECTOR	1	1						
15	R663090000	CONJUNTO TERMOPAR	THERMOCOUPLE UNIT	1	1						
16	R662659000	APOYO RACORD SONDA	PROBE CONNECTION SUPPORT	1	1						
17	R692811000	JUNTA PASAMUROS DOBLE	DOUBLE FEEDTHROUGH GASKE	1	1						
18	R662652000	BICONO CIERRE SONDA	PROBE CLOSING BICONE	1	1						
19	R662629000	RACORD CIERRE SONDA	PROBE CLOSING CONNECTION	1	1						
	Q032021000	TORNILLO ALOMADO M4X10	CURVED SCREW M4X10	4	4						
	Q232020000	ARANDELA A-4	WASHER A-4	4	4						

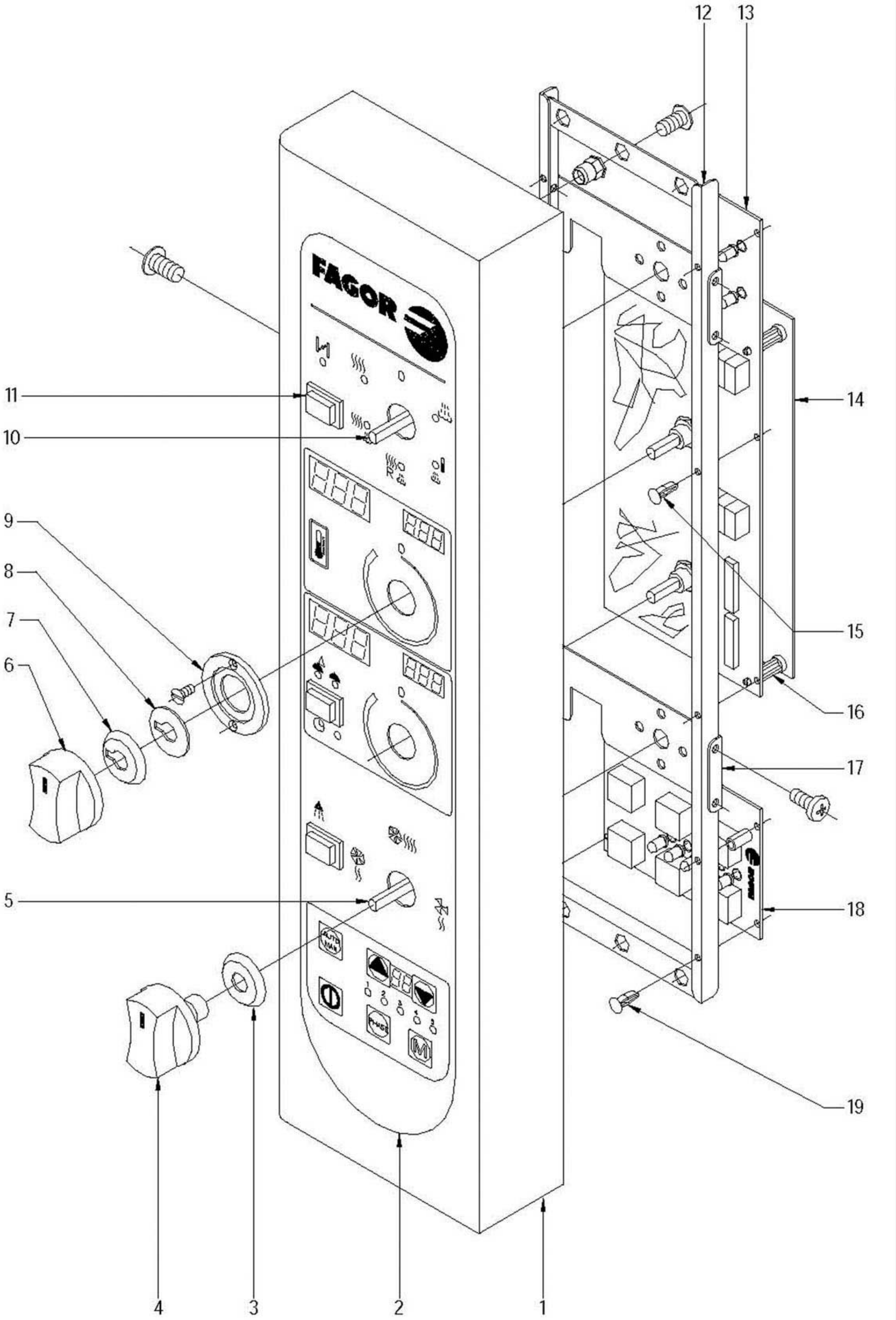

N plano	Firma	Fecha	Aparato	Lamina	
C-1966		2008-02	SISTEMA ELECTRICO PORTAMANDOS HORNOS HEM; HEP 6/11-10/11	8	Fagor Industrial S.Coop. Oñate

MOD.	HORNOS	ZONA	PARTE ELECTRICA PORTAMANDOS	PLANO	C-1966

ITEM	CODIGO	DENOMINACION	TEXTO	HEM 6/11	HEP 6/11	HEM 10/11	HEP 10/11				
1	R662831000	PORTAMANDOS COMPL. HEM-6/11	COMPL. CONTROL HOLDER HEM	1	1	_	_				
1	R672831000	PORTAMANDOS COMP. HEM-10/11	COMP. CONTROL HOLDER HEM-	_	_	1	1				
2	R663097000	SERIGRAFIA HEM-6/11	SERIGRAPHY HEM-6/11	1	_	_	_				
2	R663098000	SERIGRAFIA HEP-6/11	SERIGRAPHY HEP-6/11	_	1	_	_				
2	R673067000	SERIGRAFIA HEM-10/11 20/11	SERIGRAPHY HEM-10/11 20/11	_	_	1	_				
2	R673068000	SERIGRAFIA HEP-10/11 20/11	SERIGRAPHY HEP-10/11 20/11	_	_	_	1				
3	R663046000	JUNTA CONMUTADOR	SWITCH SEAL	2	2	2	2				
4	R663062000	BOTÓN DE MANDO COMPLETO	COMPLETE CONTROL BUTTON	2	2	2	2				
5	R663026000	CONMUTADOR FUNC 3P HME/P	FUNCTION SWITCH 3P HME/P	1	1	1	1				
6	R663063000	BOTÓN DE MANDO COMPLETO	COMPLETE CONTROL BUTTON	2	2	2	2				
7	R663045000	JUNTA POTENCIOMETRO	POTENTIOMETER SEAL	2	2	2	2				
8	R662810000	ARANDELA GUIA	GUIDE WASHER	2	2	2	2				
9	R662809000	GUIA BOTON DE MANDO	CONTROL BUTTON GUIDE	2	2	2	2				
	Q151346000	TORNILLO AVELLANADO M3x5	COUNTERSUNK BOLT M3x5	4	4	4	4				
10	R663025000	CONMUTADOR FUNC 6P HME/P	FUNCTION SWITCH 6P HME/P	1	1	1	1				
11	R663032000	PULSADOR L41M8M959F	BUTTON L41M8M959F	3	3	3	3				
12	R663005000	SOPORTE CIRCUITO IMPRESO	PRINTED CIRCUIT SUPPORT	1	1	1	1				
13	R663050000	CIRCUITO IMPRESO MANDO	PRINTED CIRCUIT CONTROL	1	1	1	1				
14	R663085000	CIRCUITO IMPR. CONTROL PROGR	PRINTED CIRCUIT CONTROL PR	1	1	1	1				
15	R663036000	FIJACION CIRCUITO	CIRCUIT ATTACHMENT	6	6	6	6				
16	R663035000	SEPARADOR 19,1 MM. HME/P	SEPARATOR 19.1 MM. HME/P	4	4	4	4				
17	R663008000	SOPORTE CONMUTADOR	SWITCH SUPPORT	2	2	2	2				
	Q151320000	TORN. ALOMADO M4X6 H.ZINCADO	HEXAGONAL CURVED HEAD M4X	12	12	12	12				
18	R663004000	CIRCUITO IMPRESO PROGRAMA	PRINTED CIRCUIT PROGRAMME	_	1	_	1				
19	R663036000	FIJACION CIRCUITO	CIRCUIT ATTACHMENT	_	4	_	4				

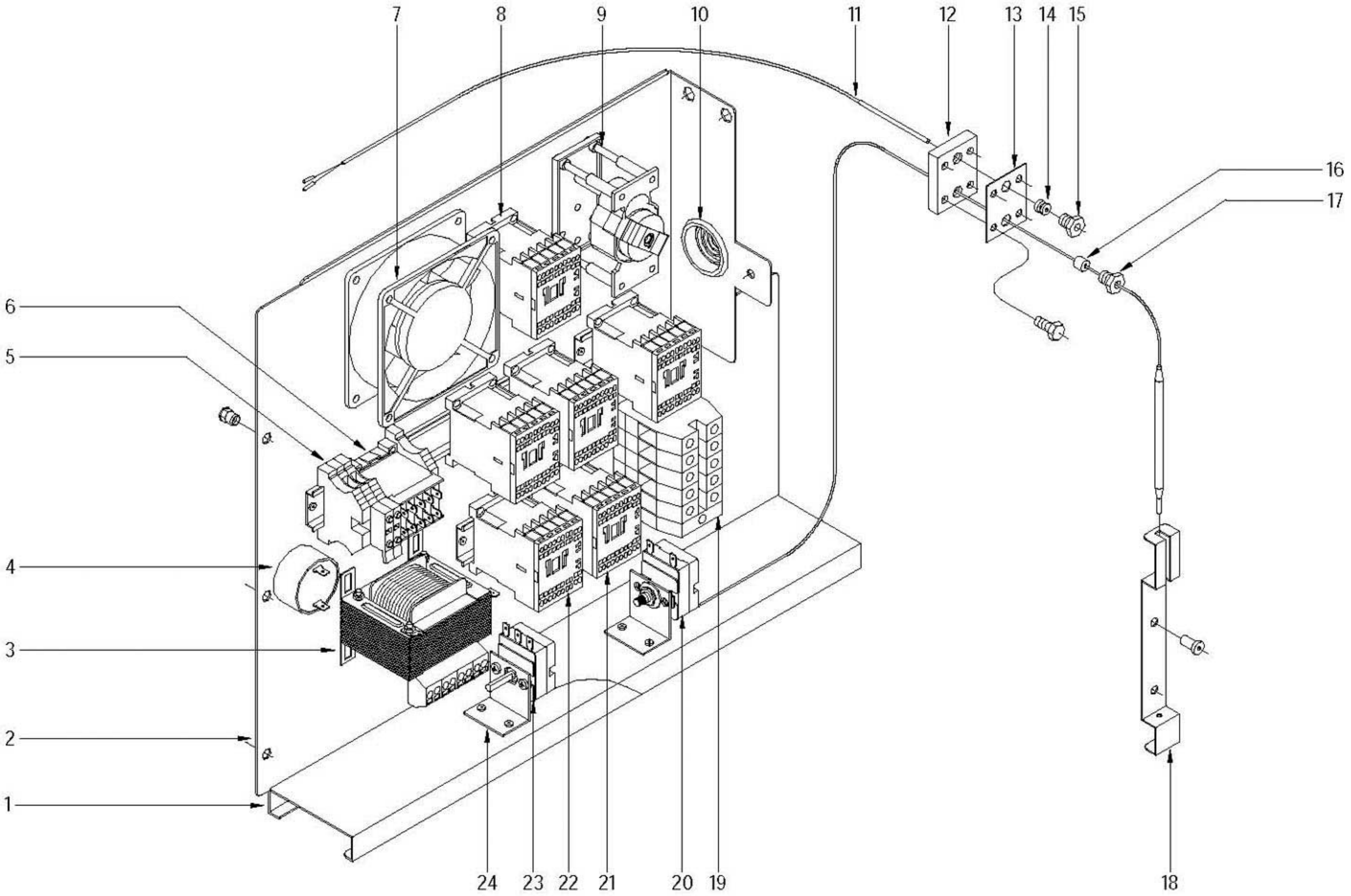

N plano	Firma	Fecha	Aparato	Lamina	
C-1967		2008-02	CUADRO ELECTRICO HORNOS HEI 6/11-10/11	9	Fagor Industrial S.Coop. FAGOR Oñate

MOD.	HORNOS	ZONA	CUADRO ELECTRICO	PLANO	C-1967

ITEM	CODIGO	DENOMINACION	TEXTO	HEI 6/11	HEI 10/11						NOTAS
1	R723101000	CONTRAGUIA CUADRO HCG	SWITCHBOARD COUNTERGUIDE	1	1						
	Q412002000	REMACHE AVINOX Ø4x10MM	RIVET AVINOX Ø4x10MM	7	7						
2	R663081000	PANEL CUADRO 6-10-20/11 ELECT	SWITCHBOARD PANEL 6-10-20/1	1	1						
	Q221342000	REMACHE EXAGONAL M5	HEXAGONAL RIVET M5	3	3						
3	R503005000	TRANSFORMADOR	TRANSFORMER	1	1						
	Q032021000	TORNILLO ALOMADO M4x10	CURVED SCREW M4X10	4	4						
	Q162020000	TUERCA EXAGONAL M4	HEXAGONAL NUT M4	4	4						
4	R693067000	ZUMBADOR	BUZZER	1	1						
5	R073005000	BORNAS PORTA FUSIBLES	FUSE HOLDER TERMINALS	2	2						
	P184011000	CARTUCHO FUSIBLE 4.A	FUSE CARTRIDGE 4.A	2	2						
	Z263303000	TOPE FINAL	END STOP	3	3						
6	Z683087000	CONTACTOR 3TF20 01-3AL2 230	CONTACTOR 3TF20 01-3AL2 230	1	1						
	Z263303000	TOPE FINAL	END STOP	1	1						
7	Z103066000	VENTILADOR 230V.50-60HZ	FAN 230V.50-60HZ	1	1						
8	Z743009000	CONTAC. SIRIUS 3RT10 16-2AP02	CONTACT. SIRIUS 3RT10 16-2AP	1	1						
9	R763006000	PROGRAMADOR INVERSION GIRO	INVERT ROTATION PROGRAMME	1	1						
	Z123018000	GUIA CONTACTOR L-55	CONTACTOR GUIDE L-55	1	1						
10	N103013000	PASA CABLES	CABLE PROTECTOR	1	1						
11	R663090000	CONJUNTO TERMOPAR	THERMOCOUPLE UNIT	1	1						
12	R662659000	APOYO RACORD SONDA	PROBE CONNECTION SUPPORT	1	1						
13	R692811000	JUNTA PASAMUROS DOBLE	DOUBLE FEEDTHROUGH GASKE	1	1						
14	R662652000	BICONO CIERRE SONDA	PROBE CLOSING BICONE	1	1						
15	R662629000	RACORD CIERRE SONDA	PROBE CLOSING CONNECTION	1	1						
	Q032021000	TORNILLO ALOMADO M4X10	CURVED SCREW M4X10	4	4						
	Q232020000	ARANDELA A-4	WASHER A-4	4	4						
16	R662662000	JUNTA CIERRE BULBO LIMITADOR	BULB LIMITER CLOSING SEAL	1	1						
17	R662629000	RACORD CIERRE SONDA	PROBE CLOSING CONNECTION	1	1						
	Q412002000	REMACHE AVINOX Ø4x10MM	RIVET AVINOX Ø4x10MM	4	4						
18	R662683000	SOPORTE BULBO	BULB SUPPORT	1	1						
	Q412002000	REMACHE AVINOX Ø4x10MM	RIVET AVINOX Ø4x10MM	2	2						

MOD.	HORNOS	ZONA	CUADRO ELECTRICO	PLANO	C-1967

ITEM	CODIGO	DENOMINACION	TEXTO	HEI 6/11	HEI 10/11						NOTAS
19	P453025000	BORNES 10 WDU-10203.O	TERMINALS 10 WDU-10203.O	3	_						
19	R263003000	BORNA PASO 35MM	THROUGH TERMINAL 35MM	_	3						
	Z263302000	BORNA DE PASO AZUL	BLUE THROUGH TERMINAL	1	_						
	R673010000	BORNA PASO AZUL 35MM	THROUGH TERMINAL BLUE 35M	_	1						
	P453026000	BORNE TIER 10 WPE-10103.O	TERMINAL TIER 10 WPE-10103.O	1	_						
	Z103035000	BORNA TIERRA 35MM	EARTH TERMINAL 35MM	_	1						
	Z683096000	TOPE FINAL WEW35 10590.0	END STOP WEW35 10590.0	_	1						
	Z683068000	SEÑALIZ.DEK-6WEIDMULLER	SIGNS DEK-6WEIDMULLER	1	1						
	R663055000	GUIA CONTACTOR L-120	CONTACTOR GUIDE L-120	1	1						
20	R243016000	LIMITADOR TEMPERATURA	TEMPERATURE LIMITER	1	1						
21	Z203050000	CONTACTOR SIRIUS 3R 230V.50-60	SIRIUS CONTACTOR 3R 230V.50-	2	4						
	R693009000	GUIA CONTACTOR L-250	CONTACTOR GUIDE L-250	1	1						
22	Z743009000	CONTAC. SIRIUS 3RT10 16-2AP02	CONTACT. SIRIUS 3RT10 16-2AP	1	1						
	Z403016000	GUIA CONTACTOR L-100	CONTACTOR GUIDE L-100	1	1						
23	R343018000	TERMOSTATO VAPOR	STEAM THERMOSTAT	1	1						
24	R343039000	SOPORTE TERMOS VAPOR	STEAM THERMOSTAT SUPPORT	2	2						
	Q412002000	REMACHE AVINOX Ø4x10MM	RIVET AVINOX Ø4x10MM	4	4						

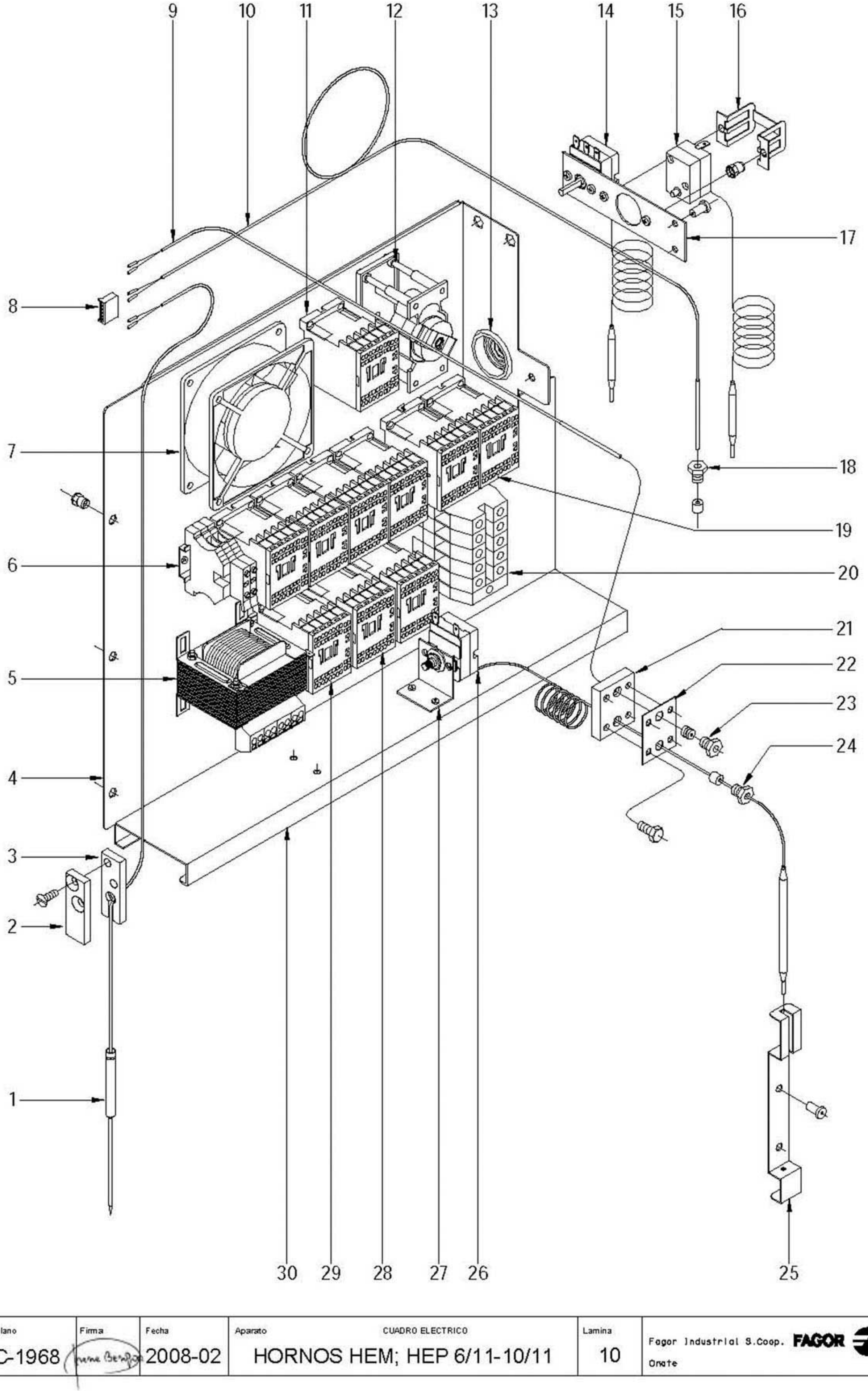

N plano	Firma	Fecha	Aparato	Lamina	
C-1968		2008-02	CUADRO ELECTRICO HORNOS HEM; HEP 6/11-10/11	10	Fagor Industrial S.Coop. FAGOR Onate

MOD.	HORNOS	ZONA	CUADRO ELECTRICO	PLANO	C-1968

ITEM	CODIGO	DENOMINACION	TEXTO	HEM 6/11	HEP 6/11	HEM 10/11	HEP 10/11				NOTAS
1	R673076000	CONJUNTO SONDA NUCLEO J XX/1	CORE PROBE UNIT J XX/11	1	1	1	1				
	Q221341000	REMACHE EXAGONAL M4	HEXAGONAL RIVET M4	2	2	2	2				
	Q042022000	TORNILLO AVELLANADO M4X15	COUNTERSUNK BOLT M4x15	2	2	2	2				
2	T133037000	TAPA SUJECION SONDA	PROBE ATTACHMENT COVER	1	1	1	1				
3	T133036000	BASE SUJECION SONDA	PROBE ATTACHMENT BASE	1	1	1	1				
4	R663081000	PANEL CUADRO 6-10-20/11 ELECT	SWITCHBOARD PANEL 6-10-20/1	1	1	1	1				
	Q221342000	REMACHE EXAGONAL M5	HEXAGONAL RIVET M5	3	3	3	3				
5	R503005000	TRANSFORMADOR	TRANSFORMER	1	1	1	1				
	Q032021000	TORNILLO ALOMADO M4x10	CURVED SCREW M4X10	4	4	4	4				
	Q162020000	TUERCA EXAGONAL M4	HEXAGONAL NUT M4	4	4	4	4				
6	R073005000	BORNAS PORTA FUSIBLES	FUSE HOLDER TERMINALS	2	2	2	2				
	P184011000	CARTUCHO FUSIBLE 4.A	FUSE CARTRIDGE 4.A	2	2	2	2				
	Z263303000	TOPE FINAL	END STOP	2	2	2	2				
7	Z103066000	VENTILADOR 230V.50-60HZ	FAN 230V.50-60HZ	1	1	1	1				
	Q032021000	TORNILLO ALOMADO M4X10	CURVED SCREW M4X10	4	4	4	4				
	Q232020000	ARANDELA A-4	WASHER A-4	4	4	4	4				
	Q162020000	TUERCA EXAGONAL M4	HEXAGONAL NUT M4	4	4	4	4				
8	R663093000	CONECTOR 6 VIAS	6-WAY CONNECTOR	1	1	1	1				
9	R663090000	CONJUNTO TERMOPAR	THERMOCOUPLE UNIT	1	1	1	1				
10	R663089000	CONJ, TERMOPAR VAPOR HME/P	STEAM THERMOCOUPLE UNIT H	1	1	1	1				
11	Z743009000	CONTACT. SIRIUS 3RT10 16-2AP02	CONTACT. SIRIUS 3RT10 16-2AP	1	1	1	1				
12	R763006000	PROGRAMADOR INVERSION GIRO	INVERT ROTATION PROGRAMME	1	1	1	1				
	Z123018000	GUIA CONTACTOR L-55	CONTACTOR GUIDE L-55	1	1	1	1				
13	N103013000	PASA CABLES	CABLE PROTECTOR	1	1	1	1				
14	R343100000	TERMOSTATO CONDUC. VAPOR	THERMOSTAT STEAM PIPE	1	1	1	1				
15	Z213014000	LIMITADOR TECASA P.	LIMITER TECASA P.	1	1	1	1				
16	Z203060000	AMARRE LIMITADOR TECASA	LIMITER FASTENING TECASA	1	1	1	1				
	Q221341000	REMACHE EXAGONAL M4	HEXAGONAL RIVET M4	2	2	2	2				
17	R673077000	SOPORTE AMARRE TERMOSTATOS	THERMOSTAT ATTACHMENT SUI	1	1	1	1				
	Q412002000	REMACHE AVINOX Ø4x10MM	RIVET AVINOX Ø4x10MM	2	2	2	2				

MOD.	HORNOS	ZONA	CUADRO ELECTRICO	PLANO	C-1968

ITEM	CODIGO	DENOMINACION	TEXTO	HEM 6/11	HEP 6/11	HEM 10/11	HEP 10/11				NOTAS
18	R662629000	RACORD CIERRE SONDA	PROBE CLOSING CONNECTION	1	1	1	1				
	3712400000	TUBO SILICONA NEGRO Ø 8*3	BLACK SILICONE PIPE Ø 8*3	1	1	1	1				
19	Z203050000	CONTACTOR SIRIUS 3R 230V.50-60	SIRIUS CONTACTOR 3R 230V.50-	4	4	6	6				
	R693009000	GUIA CONTACTOR L-250	CONTACTOR GUIDE L-250	1	1	1	1				
20	P453025000	BORNES 10 WDU-10203.O	TERMINALS 10 WDU-10203.O	3	3	_	_				
20	R263003000	BORNA PASO 35MM	THROUGH TERMINAL 35MM	_	_	3	3				
	Z263302000	BORNA DE PASO AZUL	BLUE THROUGH TERMINAL	1	1	_	_				
	R673010000	BORNA PASO AZUL 35MM	THROUGH TERMINAL BLUE 35M	_	_	1	1				
	P453026000	BORNE TIER 10 WPE-10103.O	TERMINAL TIER 10 WPE-10103.O	1	1	_	_				
	Z103035000	BORNA TIERRA 35MM	EARTH TERMINAL 35MM	_	_	1	1				
	Z683096000	TOPE FINAL WEW35 10590.0	END STOP WEW35 10590.0	_	_	1	1				
	Z683068000	SEÑALIZ.DEK-6WEIDMULLER	SIGNS DEK-6WEIDMULLER	1	1	1	1				
	R663055000	GUIA CONTACTOR L-120	CONTACTOR GUIDE L-120	1	1	1	1				
21	R662659000	APOYO RACORD SONDA	PROBE CONNECTION SUPPORT	1	1	1	1				
22	R692811000	JUNTA PASAMUROS DOBLE	DOUBLE FEEDTHROUGH GASKE	1	1	1	1				
23	R662629000	RACORD CIERRE SONDA	PROBE CLOSING CONNECTION	1	1	1	1				
	R662652000	BICONO CIERRE SONDA	PROBE CLOSING BICONE	1	1	1	1				
24	R662629000	RACORD CIERRE SONDA	PROBE CLOSING CONNECTION	1	1	1	1				
	R662662000	JUNTA CIERRE BULBO LIMITADOR	BULB LIMITER CLOSING SEAL	1	1	1	1				
	Q012021000	TORNILLO EXAGONAL M4x10 A304	HEXAGONAL BOLT M4x10 A304	4	4	4	4				
25	R662683000	SOPORTE BULBO	BULB SUPPORT	1	1	1	1				
	Q412002000	REMACHE AVINOX Ø4x10MM	RIVET AVINOX Ø4x10MM	4	4	4	4				
26	R243016000	LIMITADOR TEMPERATURA	TEMPERATURE LIMITER	1	1	1	1				
27	R343039000	SOPORTE TERMOS VAPOR	STEAM THERMOSTAT SUPPORT	1	1	1	1				
	Q412002000	REMACHE AVINOX Ø4x10MM	RIVET AVINOX Ø4x10MM	2	2	2	2				
28	Z203050000	CONTACTOR SIRIUS 3R 230V.50-60	SIRIUS CONTACTOR 3R 230V.50-	_	_	2	2				
	Z103084000	GUIA CONTACTOR L-138 "	CONTACTOR GUIDE L-138 "	1	1	1	1				
29	Z743009000	CONT.SIRIUS 3RT10 16-2AP02	SIRIUS CONT. 3RT10 16-2AP02	1	1	1	1				
30	R723101000	CONTRAGUIA CUADRO HCG	SWITCHBOARD COUNTERGUIDE	1	1	1	1				
	Q412002000	REMACHE AVINOX Ø4x10MM	RIVET AVINOX Ø4x10MM	7	7	7	7				

MOD.	HORNOS	ZONA	VARIOS	PLANO	

ITEM	CODIGO	DENOMINACION	TEXTO	HEI 6/11	HEM 6/11	HEP 6/11	HEI 10/11	HEM 10/11	HEP 10/11		
	R696501000	FOLLETO INSTRUCCIONES HMI	INSTRUCTION LEAFLET HMI	1	_	_	1	_	_		
	R666501000	FOLLETO DE INSTRUC. HME/HMP	INSTRUCTION LEAFLET HME/HM	_	1	1	_	1	1		
	R693018000	ESQUEMA TEORICO HEI 6/11	THEORETICAL DIAGRAM HEI 6/1	1	_	_	_	_	_		PLANO HC-78371
	R663001000	ESQUEMA TEORICO HEM6/11	THEORETICAL DIAGRAM HEM6/1	_	1	1	_	_	_		PLANO HC-78304
	R703041000	ESQUEMA TEORICO HEI 10/11	THEORETICAL DIAGRAM HEI 10/		_	_	1	_	_		PLANO HC-76614
	R673074000	ESQUEMA TEORICO HEM/P 10/11	THEORETICAL DIAGRAM HEM/P	_	_	_	_	1	1		PLANO HC-78178
	R693070000	ESQUEMA DE MONTAJE HMI-6-11	ASSEMBLY DIAGRAM HMI-6-11	1	_	_	_	_	_		PLANO HC-73225
	R663082000	ESQUEMA MONTAJE HME/P-6-11	ASSEMBLY DIAGRAM HME/P -6/-	_	1	1	_	_	_		PLANO HD-12680
	R703016000	ESQUEMA DE MONTAJE HMI	ASSEMBLY DIAGRAM HMI	_	_	_	1	_	_		PLANO HC-73224
	R143018000	ESQUEMA DE MONTAJE HEM/HEP	ASSEMBLY DIAGRAM HEM/HEP	_	_	_	_	1	1		PLANO HD-12681
	R693089000	INSTALACION ELECTRICA HMI	ELECTRICAL INSTALLATION HMI	1	_	_	1	_	_		
	R143017000	INSTALACION ELECTR. HME/HMP	ELEC. INSTALLATION HME/HMP	_	1	1	_	1	1		
	R693066000	CABLEADO FUERZA E-P-I-M 6/11	POWER CABLES E-P-I-M 6/11	1	1	1	_	_	_		
	R143005000	CABLEADO FUERZA CONVECCION	WIRING TO CONVECTION	_	_	_	1	1	1		
	R693065000	CABLEADO FUERZA HMI 6/11	WIRING HMI 6/11	1	_	_	_	_	_		
	R663074000	CABLEADO FUERZA E-M-P 6/11	POWER CABLES E-M-P 6/11	_	1	1	_	_	_		
	R703013000	CABLEADO FUERZA HMI 10/11	WIRING HMI 10/11	_	_	_	1	_	_		
	R673013000	CABLEADO FUERZA CUADRO ELE.	WIRING TO SWITCHBOARD	_	_	_	_	1	1		
	R663075000	CABLE. FUERZA VAPOR E-M-P 6/11	CABLE. STEAM POWER E-M-P 6/	_	1	1	_	_	_		
	R143004000	CABLEADO FUERZA VAPOR	WIRING TO STEAM	_	_	_	_	1	1		
	R093024000	CABLEADO LUZ INTERIOR	INTERIOR LIGHT WIRING	1	1	1	1	1	1		
	R763007000	CABLEADO INVERSION GIRO E	WIRING INVERT ROTATION E	1	1	1	1	1	1		
	R763011000	MONTAJE INVERSION GIRO HMM	ASSEMBLY INVERT ROTATION H	1	1	1	1	1	1		
	R143009000	INSTALACION DOBLE POTENCIA	DOUBLE POWER INSTALLATION	_	_	_	_	1	1		
	R663041000	CONEXION CONTROL PROGRAMA	CONNECTION PROGRAMME CO	_	_	1	_	_	1		

MOD.	HORNOS	ZONA	CAMBIOS PARA PASAR DE (380-415V. 50Hz) A (220V. 50Hz)	PLANO	C-1962

ITEM	CODIGO	DENOMINACION	TEXTO	HEI 6/11	HEM 6/11	HEP 6/11	HEI 10/11	HEM 10/11	HEP 10/11		
		PIEZAS A ELIMINAR	PARTS TO BE REMOVED								
9	T493003000	MOTOR 20/21 2V 400V	MOTOR 20/21 2V 400V.	_	1	1	_	1	1		
		PIEZAS A INTRODUCIR	PARTS TO BE INCLUDED								
9	T493004000	MOTOR 20/21 2V 230V.	MOTOR 20/21 2V 230V.	_	1	1	_	1	1		

MOD.	HORNOS	ZONA	CAMBIOS PARA PASAR DE (380-415V. 50Hz) A (380-415V. 60Hz)	PLANO	C-1961

ITEM	CODIGO	DENOMINACION	TEXTO	HEI 6/11	HEM 6/11	HEP 6/11	HEI 10/11	HEM 10/11	HEP 10/11		
		PIEZAS A INTRODUCIR	PARTS TO BE INCLUDED								
S/Nº	T322607000	REDUCC. CUBREVENT. 60HzD160	FANCOVER REDUC. 60HzD160	1	1	1	1	1	1		

MOD.	HORNOS	ZONA	CAMBIOS PARA PASAR DE (380-415V. 50Hz) A (220V. 60Hz)	PLANO	

ITEM	CODIGO	DENOMINACION	TEXTO	HEI 6/11	HEM 6/11	HEP 6/11	HEI 10/11	HEM 10/11	HEP 10/11		
		PIEZAS A ELIMINAR	PARTS TO BE REMOVED								
9	T493003000	MOTOR 20/21 2V 400V	MOTOR 20/21 2V 400V.	_	1	1	_	1	1		PLANO C-1962
		PIEZAS A INTRODUCIR	PARTS TO BE INCLUDED								
S/Nº	T322607000	REDUCC. CUBREVENT. 60HzD160	FANCOVER REDUC. 60HzD160	1	1	1	1	1	1		PLANO C-1961
9	T493004000	MOTOR 20/21 2V 230V.	MOTOR 20/21 2V 230V.	_	1	1	_	1	1		PLANO C-1962

MOD.	HORNOS	ZONA	CAMBIOS PARA PASAR DE (380-415V. 50Hz) A (200V. 3. 60Hz JAPON)	PLANO	

ITEM	CODIGO	DENOMINACION	TEXTO	HEP 6/11	HEP 10/11						
		PIEZAS A ELIMINAR	PARTS TO BE REMOVED								
5	R663016000	RESISTENCIA CONVECCION 230V.	CONVECTION RESISTOR 230V.	6	_						PLANO C-1962
5	R673002000	RESISTENCIA CONVECCION	CONVECTION RESISTOR	_	6						PLANO C-1962
9	T493003000	MOTOR 20/21 2V 400V	MOTOR 20/21 2V 400V.	1	1						PLANO C-1962
		PIEZAS A INTRODUCIR	PARTS TO BE INCLUDED								
S/Nº	T322607000	REDUCC. CUBREVENT. 60HzD160	FANCOVER REDUC. 60HzD160	1	1						PLANO C-1961
5	R663002000	RESISTENCIA 2KW HEM 6-11 CAM.	RESISTOR 2KW HEM 6-11 CAM.	6	_						PLANO C-1962
5	R683000000	RESISTENCIA CONV. 230V	CONV. RESISTOR 230V	_	6						PLANO C-1962
9	T493004000	MOTOR 20/21 2V 230V.	MOTOR 20/21 2V 230V.	1	1						PLANO C-1962
S/Nº	R673078000	TRANSFORMADOR 200/230V 200VA	TRANSFORMER 200/230V 200VA	1	1						
	R693091000	PLANO DE MONTAJE	ASSEMBLY PLAN	1	1						PLANO HB-72194
	R763003000	CABLEADO TRANSFORMADOR	TRANSFORMER WIRING	1	1						

MOD.	HORNOS	ZONA	PIEZAS ESPECIFICAS PARA VAUBAN	PLANO	C-1959

ITEM	CODIGO	DENOMINACION	TEXTO	VEI-6/11	VECE-6/11	VECP-6/11	VEI-10/11	VECE-10/11	VECP-10/11		
		PIEZAS A ELIMINAR	PARTS TO BE REMOVED								
8	R693093000	SERIGRAFIA HEI-6/11	SERIGRAPHY HEI-6 / 11	1	_	_	_	_	_		
	R696501000	FOLLETO INSTRUCCIONES HMI	INSTRUCTION LEAFLET HMI	1	_	_	1	_	_		
8	R663097000	SERIGRAFIA HEM-6/11	SERIGRAPHY HEM-6/11	_	1	_	_	_	_		
8	R663098000	SERIGRAFIA HEP-6/11	SERIGRAPHY HEP-6/11	_	_	1	_	_	_		
8	R703042000	SERIGRAFIA HEI-10/11	SERIGRAPHY HEI-10 / 11	_	_	_	1	_	_		
8	R673067000	SERIGRAFIA HEM-10/11 20/11	SERIGRAPHY HEM-10/11 20/11	_	_	_	_	1	_		
8	R673068000	SERIGRAFIA HEP-10/11 20/11	SERIGRAPHY HEP-10/11 20/11	_	_	_	_	_	1		
		PIEZAS A INTRODUCIR	PARTS TO BE INCLUDED								
8	R693094000	SERIGRAFIA VAUBAN VEI-6/11	SERIGRAPHY VAUBAN VEI-6/11	1	_	_	_	_	_		
	R696520000	FOLLETO INSTRUCCIONES VEI	INSTRUCTIONS LEAFLET VEI	1	_	_	1	_	_		
8	R663099000	SERIGRAFIA VAUBAN VECE-6/11	SERIGRAPHY VAUBAN VECE-6/1	_	1	_	_	_	_		
8	R663107000	SERIGRAFIA VAUBAN VECP-6/11	SERIGRAPHY VAUBAN VECP-6/1	_	_	1	_	_	_		
8	R703043000	SERIGRAFIA VAUBAN VEI-10/11	SERIGRAPHY VAUBAN VEI-10/11	_	_	_	1	_	_		
8	R673069000	SERIGRAFIA VAUBAN VECE-10/11	SERIGRAPHY VAUBAN VECE-10/	_	_	_	_	1	_		
8	R673070000	SERIGRAFIA VAUBAN VECP-10/11	SERIGRAPHY VAUBAN VECP-10/	_	_	_	_	_	1		

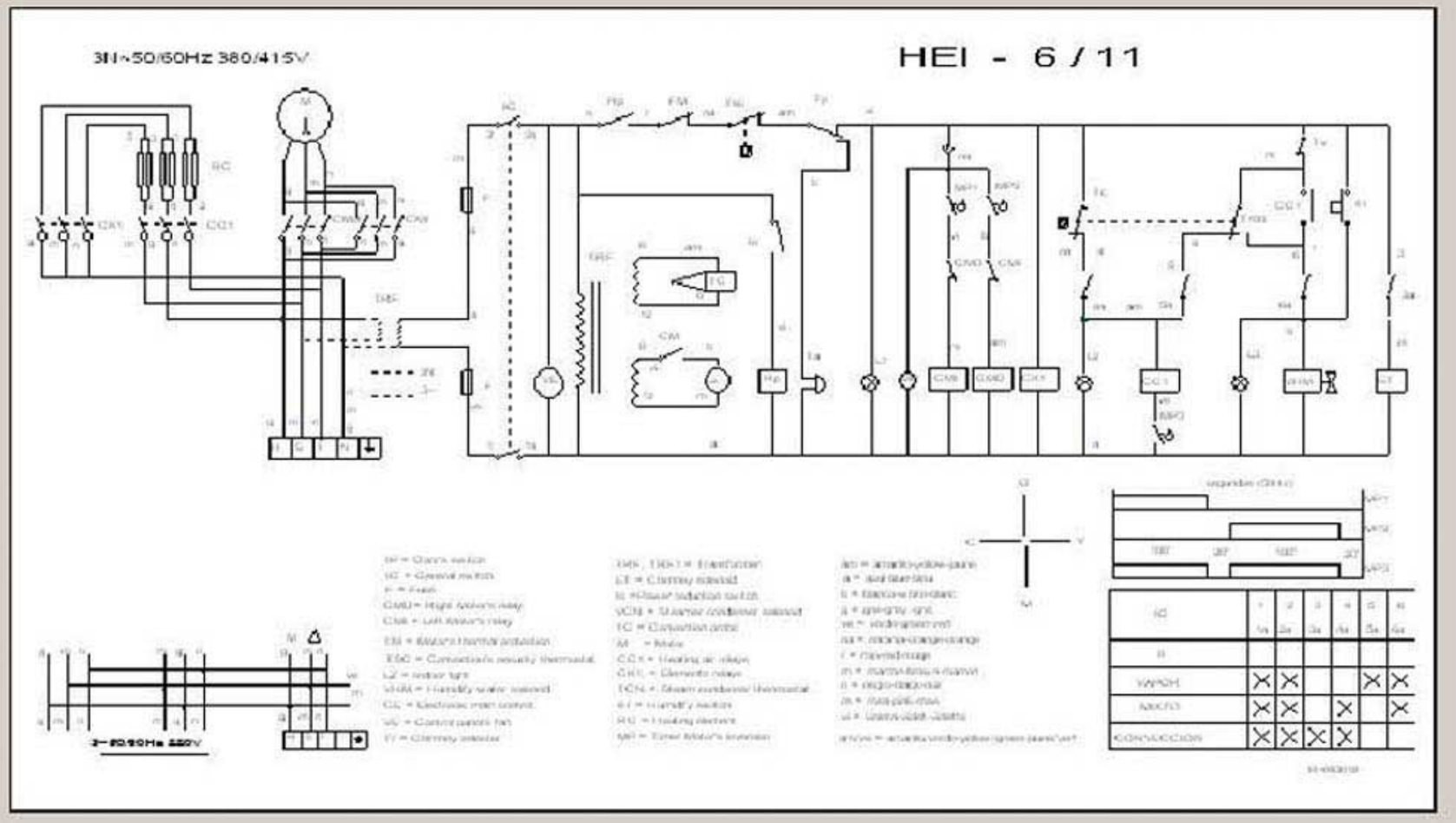

-	-	-	-	R693018	-
Zk./Nº	Pieza	Cant.	Materiala/Material	Klas. zk./Nº Clas.	Gainazal akabera/Tratamiento
Zk./Nº	Aldaketa/Modificaciones		Nork proposatua/Propuesta de	Data/Fecha	Perdoi orokorrak Tolerancias generales
-	-		-	-	
-	-		-	-	< 5 ± 0.2 / 50 ÷ 100 ± 0.8
-	-		-	-	5 ÷ 25 ± 0.4 / >100 ± 1
-	-		-	-	25 ÷ 50 ± 0.6 / α ± 1
-	-		-	-	

	Sinadura/Firma	Data/Fecha		
Marraztua/Dibujado	m.mallio	-	FAGOR Fagor Industrial,Koop.Elk., Mugatua	Gainazal perdoia Mecanizado superficial —
Proiektatua/Proyectado	m.mallio	-		
Egiaztatua/Comprobado		-		
Eskala/Escala -	-			Plano Zk./Plano Nº HC-78371 -
				- Zk.ord.du
	Plano hau ezin daiteke erabili, ez berriztatu, gure baimenik gabe.			- Zk.gaitik ord.

HEM - 6/11 HEP- 6/11 E61 GHN

3N ~ 50/60Hz 380/415V

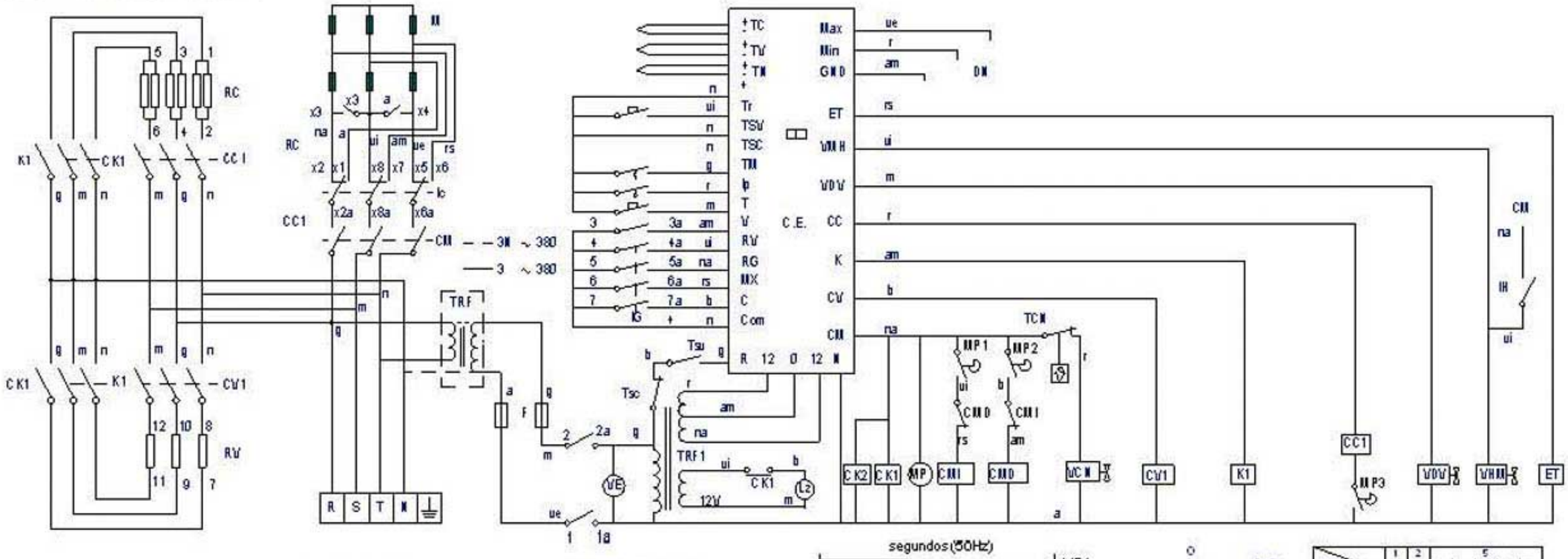

3 ~ 50/60Hz 230 V

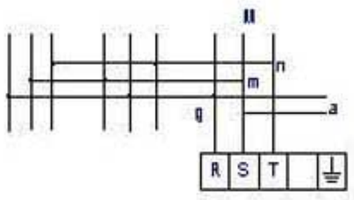

IP = Doors switch
IG = General switch
F = Fuse
CMD = Right Motor's relay
CMI = Left Motor's relay
VDV = Steamer's solenoid
DN = Water level control
TM = Motor's thermal protector
TSV = Steamer's security thermostat
TSC = Convection's security thermostat
LZ = Indoor light
VHM = Humidity water solenoid
CE = Electronic main control
RV = Steamer element
VE = Control panel's fan
Tr = Chimney selector

TRF, TRF1 = Transformer
ET = Chimney solenoid
Ic = Power reduction switch
VCN = Steamer condenser solenoid
TV = Steam probe
TC = Convection probe
TN = Food probe
M = Motor
CC1,CC2 = Heating air relay's
CV1,CV2 = Heating water relay's
CK1,CK2,K1,K2 = Element's relay's
TCN = Steam condenser thermostat
IH = Humidity switch
T = Timer or Food probe selector
RC = Heating element
MP = Timer Motor's fan motor

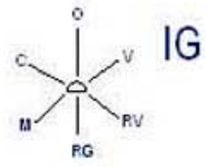

IG

Mdo	1 1a	2 2a	3 3a	4 4a	5 5a	6 6a	7 7a
OFF							
VAPOR	X	X	X				
[illegible]	X	X		X			
[illegible]	X	X			X		
MIXTO	X	X				X	
CONVECCION	X	X					X

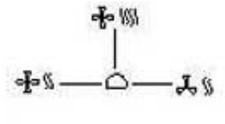

Ic	x1	x2	x3	x4	x5	x6	x7	x8	x9	x10
	x1a — x2a		x3a — x4a		x5a — x6a		x7a — x8a		x9a	x10A
	X		X	X		X	X			
	X		X	X		X	X		X	X
		X			X			X		

R-663001

am = amarillo-yellow-jaune
a = azul-blue-bleu
b = blanco-white-blanc
g = gris-grey-gris
ve = verde-green-vert
na = naranja-orange-orange
r = rojo-red-rouge
m = marron-brown-marron
n = negro-black-noir
rs = rosa-pink-rose
vi = violeta-violet-violette
am/ve = amarillo/verde-yellow/green-jaune/vert

	ESQUEMA TEORICO HEM, HEP 6/11			R663001000		
N°	Pieza	Cant.	Material	N° Clasificación	Acabado	
N°	Modificación		Propiedad de	Fecha	Tolerancias generales	
					<3±	50–100± :
					3–25± :	>100±
					25–50± :	X±

	Firma	Fecha		
Dibujado	M. Mallo	26-09-2005	FAGOR	Mecanizado superficial
Proyectado	M. Mallo	26-09-2005	Fagor Industrial, Coop. Elk., Mugarra	
Comprobado		26-09-2005		
Escala	HORNO MIXTO HEM HEP			Plano número HC - 78304
				Sustituye al N° he72270
				Sustituido por

HEI - 10 / 11, HEI - 20 - 11

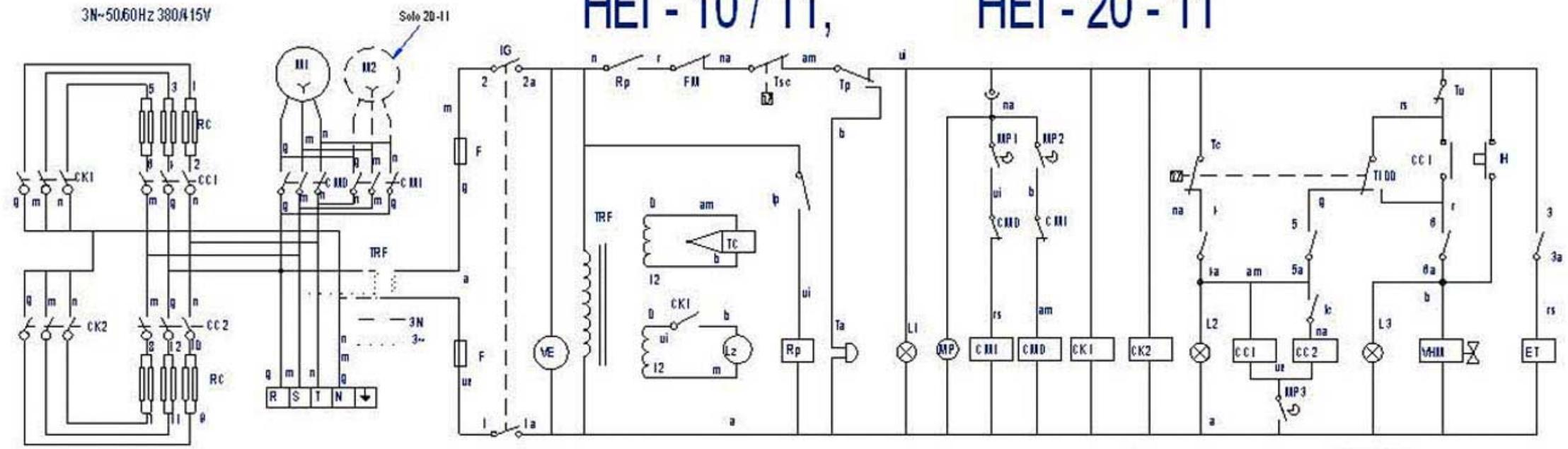

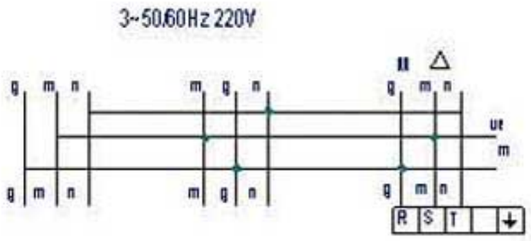

P = Door's switch
IG = General switch
F = Fuse
CMD = Right Motor's relay
CMI = Le ft Motor's relay
VM V = Steamer's solenoid
DN = Water level control
TM = Motor's thermal protection
TSV = Steamer's security thermostat
TSC = Conuction's security thermostat
LZ = Indoor light
VHM = Humidify water solenoid
CE = Electronic main control
RV = Steamer elements
VE = Control panel's fan
Tr = Chimney selector

TRF, TRF I = Transformer
ET = Chimney solenoid
Ic = Power reduction switch
VC N = Steamer condenser solenoid
TV = Steam probe
TC = Conuction probe
TN = Food probe
M = Motor
CC1 ,CC 2 = Heating air relays
CV1 ,C V2 = Heating water relays
CK1 ,C K2 ,K1 ,K2 = Elements relays
TC N = Steam condenser thermostat
IH = Humidify switch
T = Timer or Food probe selector
RC = Heating element
MP = Timer Motor's inversion

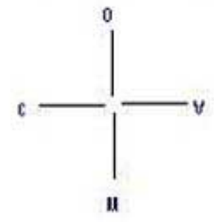

am = amarillo-yellow-jaune
a = azul-blue-bleu
b = blanco-white-blanc
g = gris-grey -gris
ve = verde-green-vert
na = naranja-orange -orange
r = rojo-red-rouge
m = marron-brown-marron
n = negro-black-noir
rs = rosa-pink-rose
ui = violeta-violet-violette

amve = amarillo/verde -yellow/green-jaune/vert

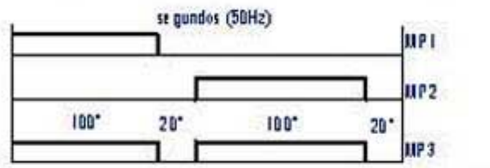

IG	1 1a	2 2a	3 3a	4 4a	5 5a	6 6a
0						
VAPOR	X	X			X	X
MIXTO	X	X		X		X
CONVECCION	X	X	X	X		

R1030+1000

T100: Termostato de 100ºC
Rc: Resistencia de calentamiento
IG: Interruptor general
Lz: Luz interior
F: Fusible
CMD, CMI: Contactor motor
VHM: Electrovalvula humidificador
IP: Interruptor puerta
FM: Térmico motor
TP: Temporizador manual
TSC: Termostato seguridad conuección
TV: Termostato vapor
TRF: Transformador

M: Motor
Tc: Termostato conuección
CK1, CC1 : Contactor calentamiento
ET: Electroimán de apertura de tiro
C: Condensador
LI: Lámpara marcha
L2: Lámpara calentamiento
L3: Lámpara humidificador
Ta: Timbre avisador
FI: Filtro de interferencias
IH: Pulsador de humidificador
VE: Ventilador cuadro eléctrico
Rp: Relé puerta
MP = Programador inuersion motor

			3 ~ 50/60Hz 230 V		
	Esquema teorico HEI 10-11, HEI 20-11		3 ~ 50/60Hz 400 V	R-703041	
Nº	Pieza		Material	Nº Clasificación	Acabado
Nº	Modificación		Proyectado	Fecha	Tolerancias generales
1	Introducir HEI - 20-11		M.Mallo	31-05-2001	

	Firma	Fecha
Dibujado	Iratxe	13/11/96
Proyectado		
Comprobado		

FAGOR
Fagor Industrial,Koop.Elk., Mugarra

Escala

HORNOS

Mecanizado superficial

Plano número
HC-76614 - 1

Sustituye al Nº

Sustituido por

HEM - 10/11 HEP-10/11 E101 GHN

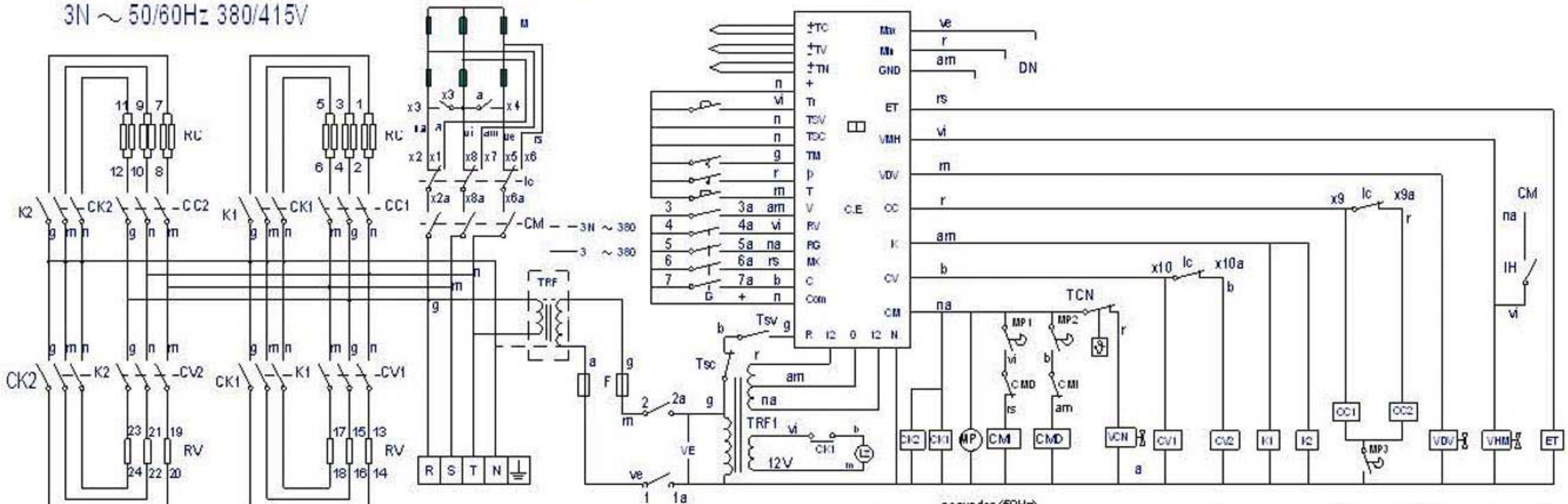

IP = Door's switch
IG = General switch
F = Fuse
CMD = Right Motor's relay
CMI = Left Motor's relay
VDV = Steamer's sole noid
DN = Water level control
TM = Motor's thermal protection
TSV = Steamer's security thermostat
TSC = Convection's security thermostat
LZ = Indoor light
VHM = Humidity water sole noid
CE = Electron b mala control
RV = Steamer elements
VE = Control panel's fan
Tr = Chimney selector

TRF, TRF1 = Transformer
ET = Chimney sole noid
Ic = Power reduction switch
VCN = Steamer condenser sole noid
TV = Steam probe
TC = Convection probe
TN = Food probe
M = Motor
CC1,CC2 = Heating air relays
CV1,CV2 = Heating water relays
CK1,CK2,K1,K2 = Elements relays
TCN = Steam condenser thermostat
IH = Humidity switch
T = Timer or Food probe selector
RC = Heating element
MP = Timer Motor's inversion

am = amarillo-yellow-jaune
a = azul-blue-bleu
b = blanco-white-blanc
g = gris-grey-gris
ve = verde-green-vert
na = naranja-orange-orange
r = rojo-red-rouge
m = marron-brown-marron
n = negro-black-noir
rs = rosa-pink-rose
vi = violeta-violet-violette

am/ve = amarillo/verde-yellow/green-jaune/vert

MM=	1 1a	2 2a	3 3a	4a	5 5a	6a	7a
OFF							
VAPOR	X	X	X				
[illegible]	X	X		X			
[illegible]	X	X			X		
MIXTO	X	X				X	
CONVECCION	X	X					X

Ic	x1 x1a	x2 x2a	x3 x3a	x4 x4a	x5 x5a	x6 x6a	x7 x7a	x8 x8a	x9 x9a	x10 x10A
	X		X	X		X	X			
	X		X	X		X	X		X	X
		X			X			X		

P-673074

	ESQUEMA TEORICO HBM, HEP 10/11			R673074000		
N°	Pieza	Cant.	Material	N° Clasificacion	Acabado	
N°	Modificacion		Propuesta de	Fecha	Tolerancias generales	
					<5±	50–100± :
					5–25± :	>100±
					25–50± :	Ø±

	Firma	Fecha
Dibujado	M. Mallo	17-05-2005
Proyectado	M. Mallo	17-05-2005
Comprobado		17-05-2005
Escala		

FAGOR

Fagor Industrial, Koop. Elk., Mogarria

Mecanizado superficial

HORNO MIXTO HEM HEP

Plano número
HC - 78178

Sustituye al N° hc72270

Sustituido por

HEM - 10/11 HEP-10/11 E101 GHN

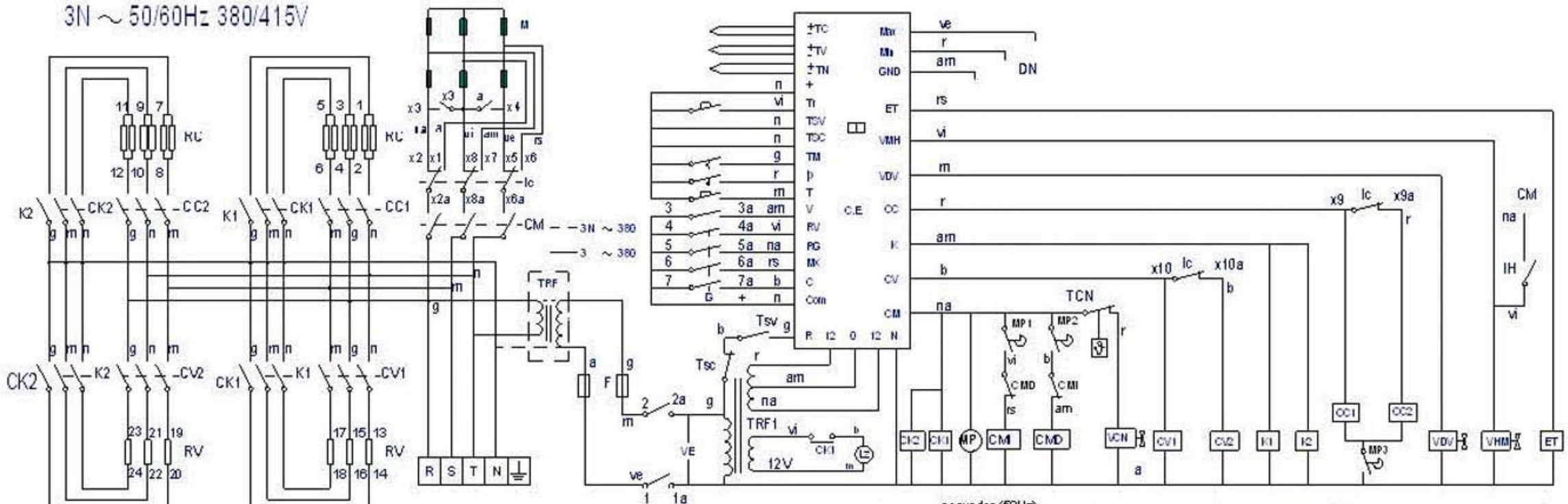

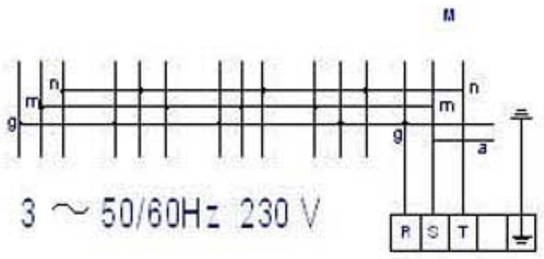

IP = Door's switch
IG = General switch
F = Fuse
CMD = Right Motor's relay
CMI = Left Motor's relay
VDV = Steamer's solenoid
DN = Water level control
TM = Motor's thermal protection
TSV = Steamer's security thermostat
TSC = Convection's security thermostat
LZ = Indoor light
VHM = Humidify water solenoid
CE = Electronic main control
RV = Steamer elements
VE = Control panel's fan
Tr = Chimney selector

TRF, TRF1 = Transformer
ET = Chimney solenoid
Ic = Power reduction switch
VCN = Steamer condenser solenoid
TV = Steam probe
TC = Convection probe
TN = Food probe
M = Motor
CC1, CC2 = Heating air relays
CV1, CV2 = Heating water relays
CK1, CK2, K1, K2 = Elements relays
TCN = Steam condenser thermostat
IH = Humidify switch
T = Timer or Food probe selector
RC = Heating element
MP = Timer Motor's inversion

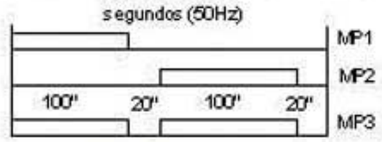

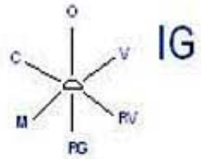

Mode	1 1a	2 2a	3a	4a	5 5a	6a	7a
OFF							
VAPOR	X	X	X				
[illegible]	X	X		X			
[illegible]	X	X			X		
MIXTO	X	X				X	
CONVECCION	X	X					X

am = amarillo-yellow-jaune
a = azul-blue-bleu
b = blanco-white-blanc
g = gris-grey-gris
ve = verde-green-vert
na = naranja-orange-orange
r = rojo-red-rouge
m = marron-brown-marron
n = negro-black-noir
rs = rosa-pink-rose
vi = violeta-violet-violette

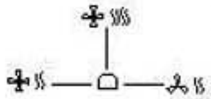

Ic	x1 x1a	x2 x2a	x3 x3a	x4 x4a	x5 x5a	x6 x6a	x7 x7a	x8 x8a	x9 x9a	x10 x10A
	X		X	X		X	X			
	X		X	X		X	X		X	X
		X			X			X		

am/ve = amarillo/verde-yellow/green-jaune/vert

R-673074

	ESQUEMA TEORICO HEM, HEP 10/11			R673074000		
N°	Pieza	Cant.	Material	N° Clasificacion	Acabado	
N°	Modificacion		Propuesta de	Fecha	Tolerancias generales	
					<5±	50–100± :
					5–25± :	>100±
					25–50± :	<X±

	Firma	Fecha
Dibujado	M. Mallo	17-05-2005
Proyectado	M. Mallo	17-05-2005
Comprobado		17-05-2005
Escala		

FAGOR

Fagor Industrial, Koop. Elk., Mugatua

Mecanizado superficial

HORNO MIXTO HEM HEP

Plano numero HC - 78178

Sustituye al N° hc72270

Sustituido por

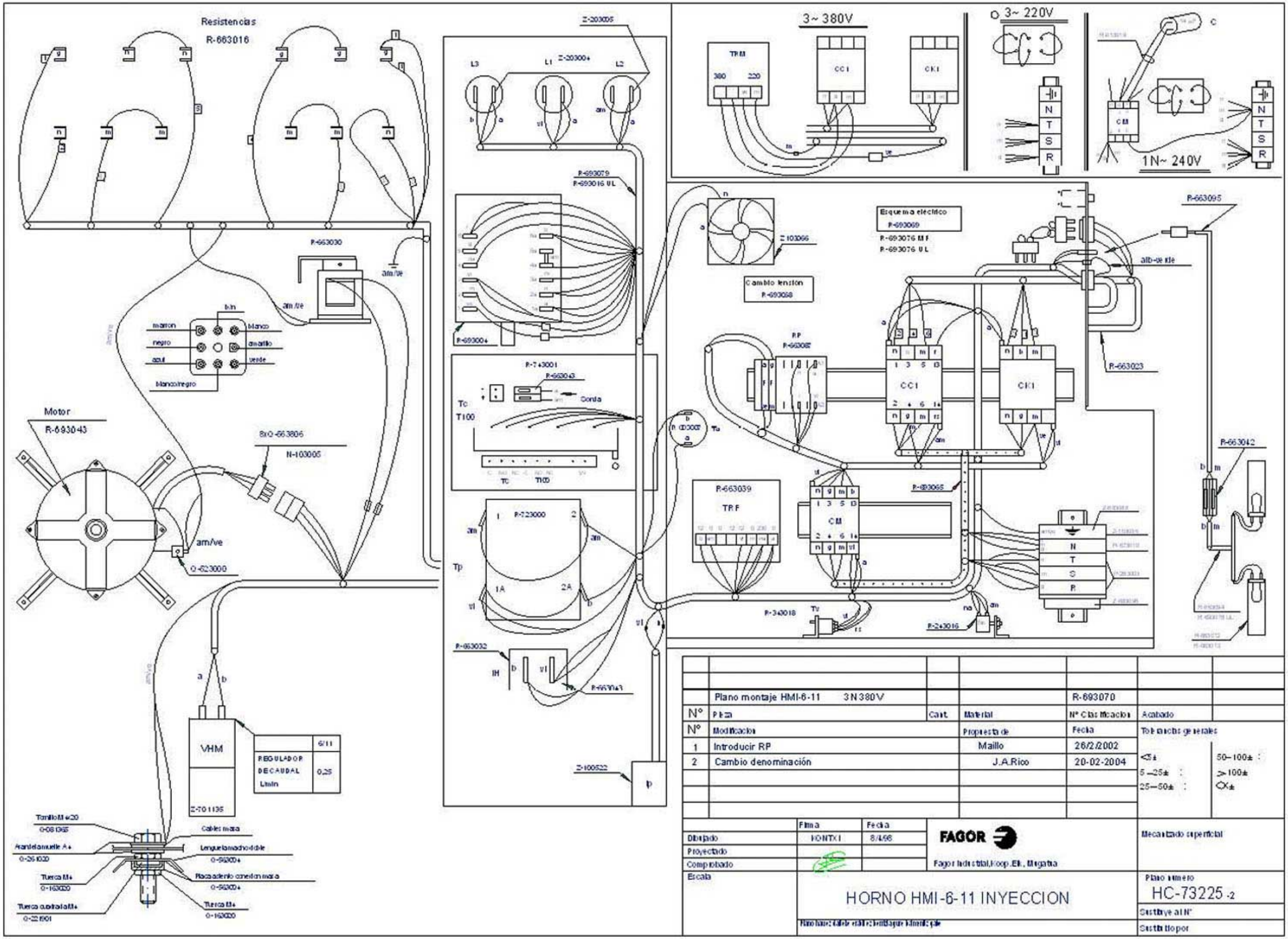

	Plano montaje HMI-6-11 3N380V			R-693070		
Nº	Pieza	Cant.	Material	Nº Clasificacion	Acabado	
Nº	Modificacion		Propuesta de	Fecha	Tolerancias generales	
1	Introducir RP		Maillo	26/2/2002	<5±	50–100± :
2	Cambio denominación		J.A.Rico	20-02-2004	5–25± :	>100±
					25–50± :	<X±

	Firma	Fecha
Dibujado	KONTXI	8/4/98
Proyectado		
Comprobado		
Escala		

FAGOR

Fagor Industrial, Koop. Elk., Mugatua

Mecanizado superficial

HORNO HMI-6-11 INYECCION

Plano número HC-73225 -2

Sustituye al Nº

Sustituido por

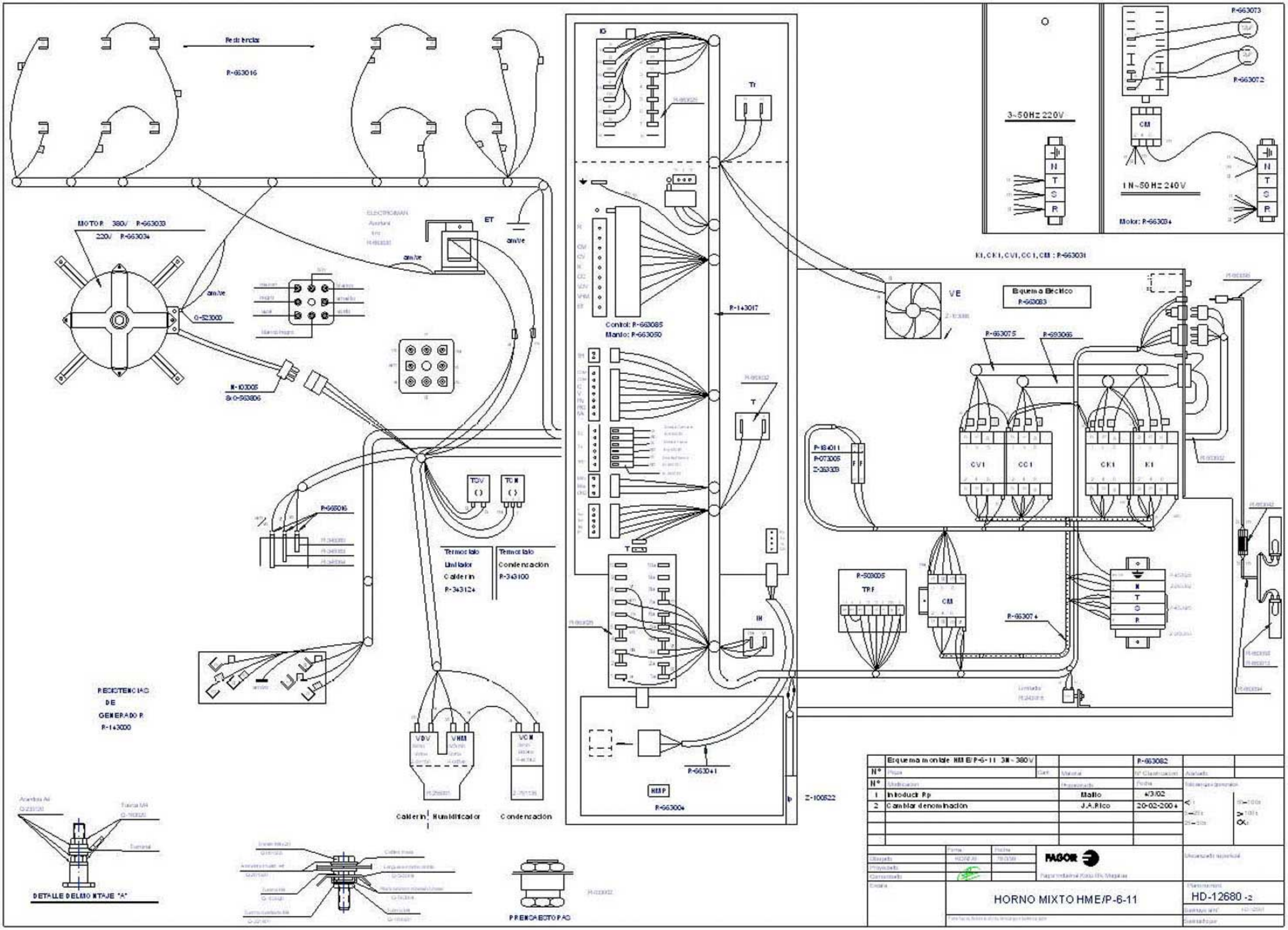

Resistencias
R-663016
MOTOR 380V R-663033
220V R-663034
ET
am/ve
Q-523000
N-103005
Sx Q-563806
R-665016
TCV
TCN
Termostato Limitador Calderin R-343124
Termostato Condensación R-343100
RESISTENCIAS DE GENERADOR R-143000
VDV
VHM
VCN
Calderin
Humidificador
Condensación
IG
Tr
Control: R-663085
Mando: R-663050
R-143017
T
IH
HMP
R-663004
R-663041
Z-100522
3~50Hz 220V
N
T
S
R
R-663073
R-663072
CM
1N~50Hz 240V
Motor: R-663034
K1, CK1, CV1, CC1, CM : R-663031
VE
Esquema Eléctrico
R-663083
R-663075
R-693066
P-184011
P-073005
Z-263303
CV1
CC1
CK1
K1
R-503005
TRF
R-663074
DETALLE DEL MONTAJE "A"
PRENSA ESTOPAS
Esquema montaje HME/P-6-11 3N~380V
R-663082
N°
Pieza
Cant.
Material
N° Clasificación
Acabado
N°
Modificación
Proyectado
Fecha
1
Introducir Rp
Mallo
4/3/02
2
Cambiar denominación
J.A.Rico
20-02-2004
Fecha
Fecha
Dibujado
Proyectado
Comentado
Fecha
FAGOR
Fagor Industrial Koop Ltd. Mogilaa
Mecanizado superficial
HORNO MIXTO HME/P-6-11
Planeamiento
HD-12680 -2
Sustituye a/n°
Sustituido por

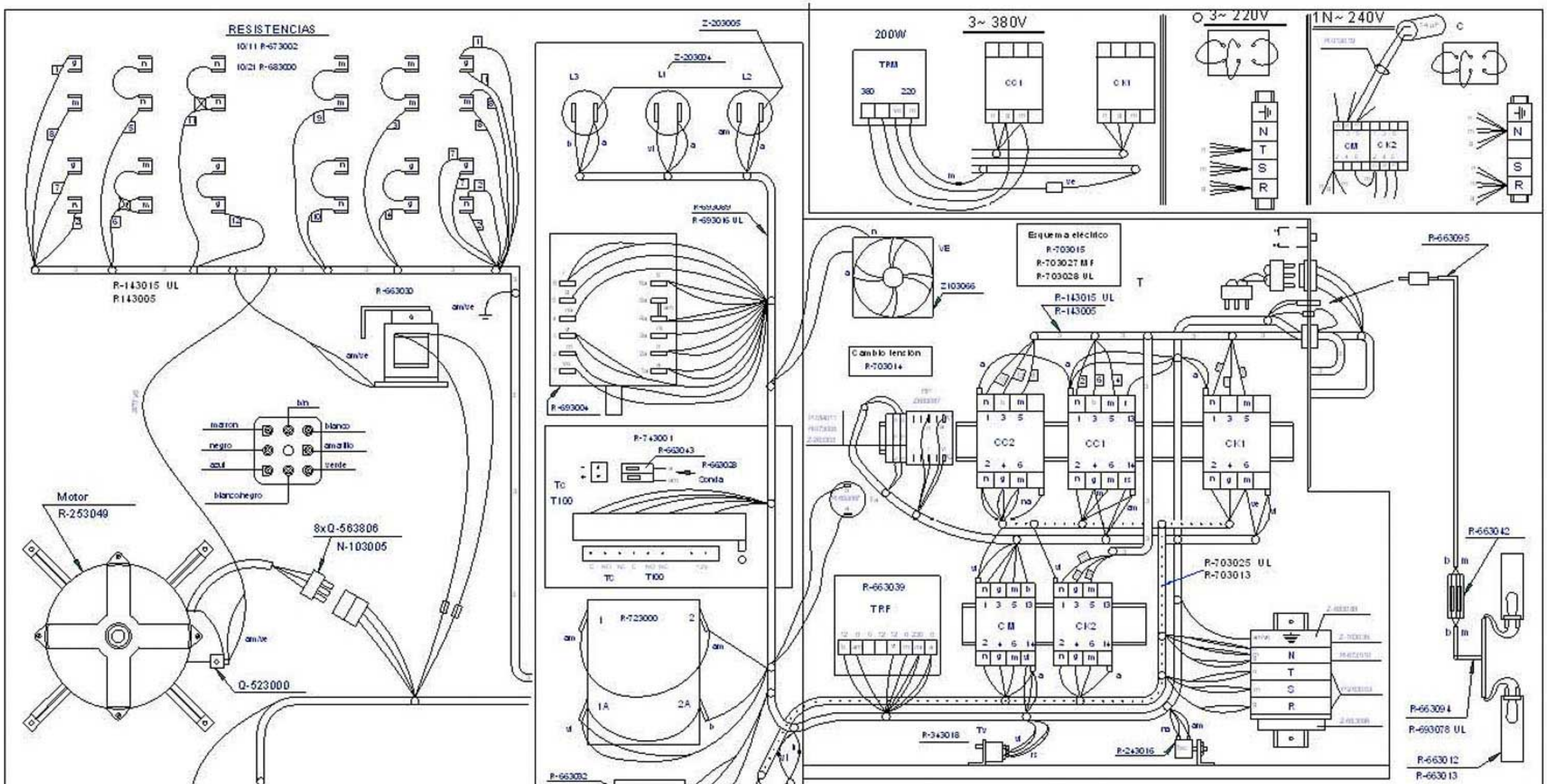

	Plano mont HMI-10-11/20-21 3N 380V			R-703016		
N°	Pieza	Cant.	Material	N° Clasificación	Acabado	
N°	Modificación		Propuesta de	Fecha	Tolerancias generales	
1	Introducir Rp		Maillo	26/2/2002	<5±	50–100± :
2	Cambio denominación		J.A.Rico	20-02-2004	5–25± :	>100±
					25–50± :	<X±

	Firma	Fecha
Dibujado	KONTXI	8/4/98
Proyectado		
Comprobado		
Escala		

FAGOR

Fagor Industrial, Koop. Elk., Mugatua

Mecanizado superficial

HORNO HMI-10/11 INYECCION

Plano número HC-73224-02

Sustituye al N°

Sustituido por

Resistencias

20/21 20/11 TANDO
LA CONEXIÓN ES IDEAL
PARA LAS RESISTENCIAS
INFERIORES

ELECTRONICA
Ajustes
Ind.
R-663032

ET

a/m/ve

a/m/ve

a/m/ve

sdo 20/11 20/21
R-059004

CO LO 20/11 20/21
T- 133001

MOTOR

380V R-663033
220V R-663034

R-103005
SDO R-043004

Sdo 20/11 20/21

R-668016

TDV

TDM

Termostato
Limitador
Caldertn
R-343124

Termostato
Condensación
R-343100

RESISTENCIAS
DE
GENERADOR
R-143000

SOLO VERSION
20/21

VDV

VHM

VCM

Caldertn

Humidificador

Condensación

DETALLE DELMONTAJE "A"

PRENSAESTOPAS

IG

Tr

Central R-663035
Mando R-663050

R-143017

T

T

R-143009

IH

R-663041

HMP
R-663004

R-093012 UL
R-059004
Sdo 20/11 20/21

Z-100522

3~50Hz 220V

N
T
S
R

R-663073

R-663072

CM
CK

1 N~50 Hz 240V

Mota: R-663034

CONTACTO PED		20/21	10/11-10/21-20/11	20/11 TANDO
CC1, CC2, CK1, CK2, K1, K2		X-183011	R-663031	X-183011
*CV1, CV2		X-183011	R-663031	R-663031

Esquema Electrico
20/21-20/11 R-143019
10/11-10/21 R-673058

VE

CV2
CC2
CV1
CC1
CK1
K1

R-663031

R-503005
TRF

CM
CK2
K2

N
T
S
R

Esq mon E/P-101/102/201/202 3N~380V
R-143018

N°	Plano	Cant.	Material	Nº Clasificación
N°	Modificación		Proyectado	Fecha
	Sustituye R-140032 por X-183011 en frontal 20/21		Editado	09.07.20
	Introducir R9		Copia	02.02.21
	Cambio denominación		JAVIER	20.02.2014

Acabado
Tolerancias generales
<0,1 0,1—0,5 0,5—1 1—2,5 2,5—10 >10 Qx

	Firma	Fecha
Dibujado	JON	16.2.99
Proyectado		
Comprobado		
Escala		

FAGOR
Fagor Industrial Soc. Coop. Mondragón

Mecanizado superficie

HORNO MIXTO
HMEP 10-11/ 10-21
HMEP 20-11/ 20-21

Plano número
HD-12681 -3
Sustituye a/n°
HD-12491
Sustituido por

KIT 400V SIN NEUTRO HORNOS ELECTRICOS xx/11
1100002826

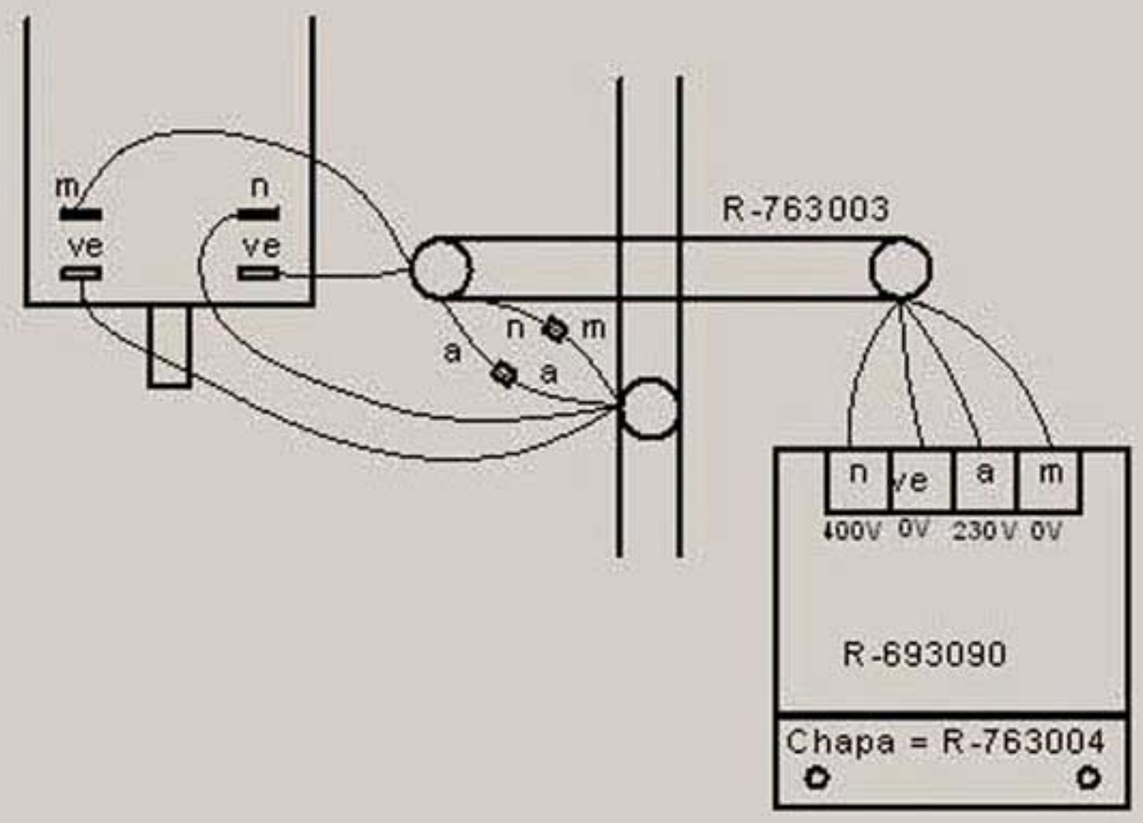

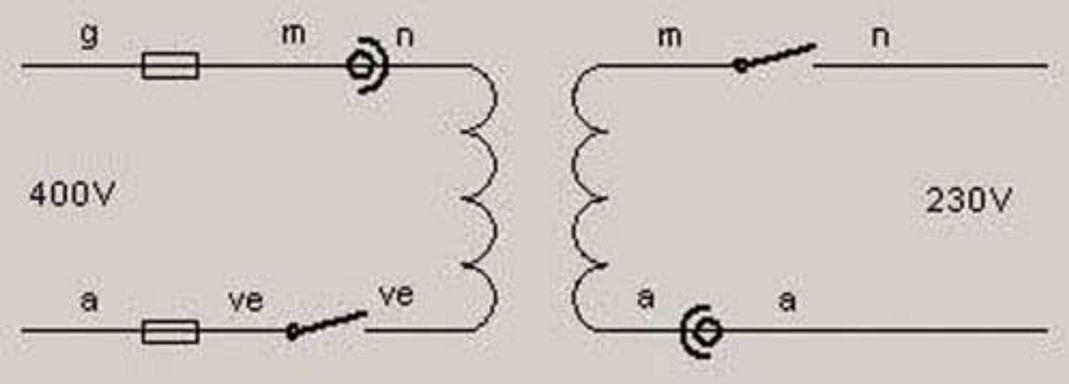

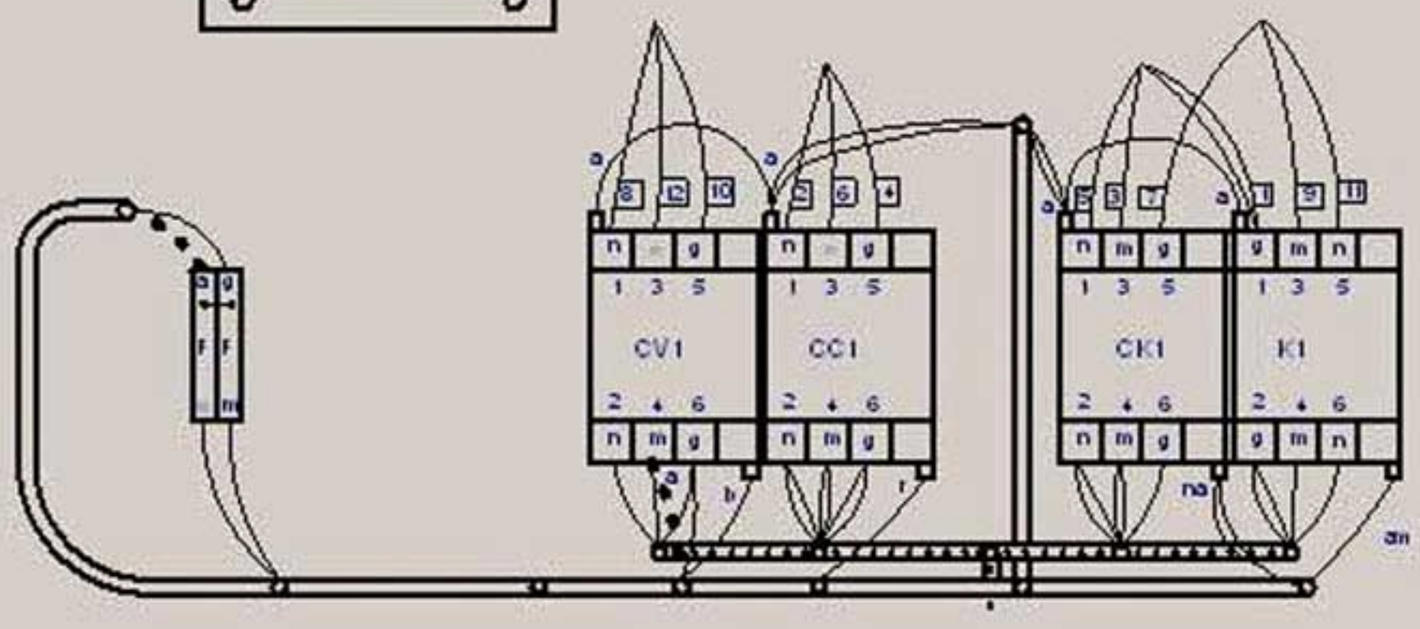

KIT 200V

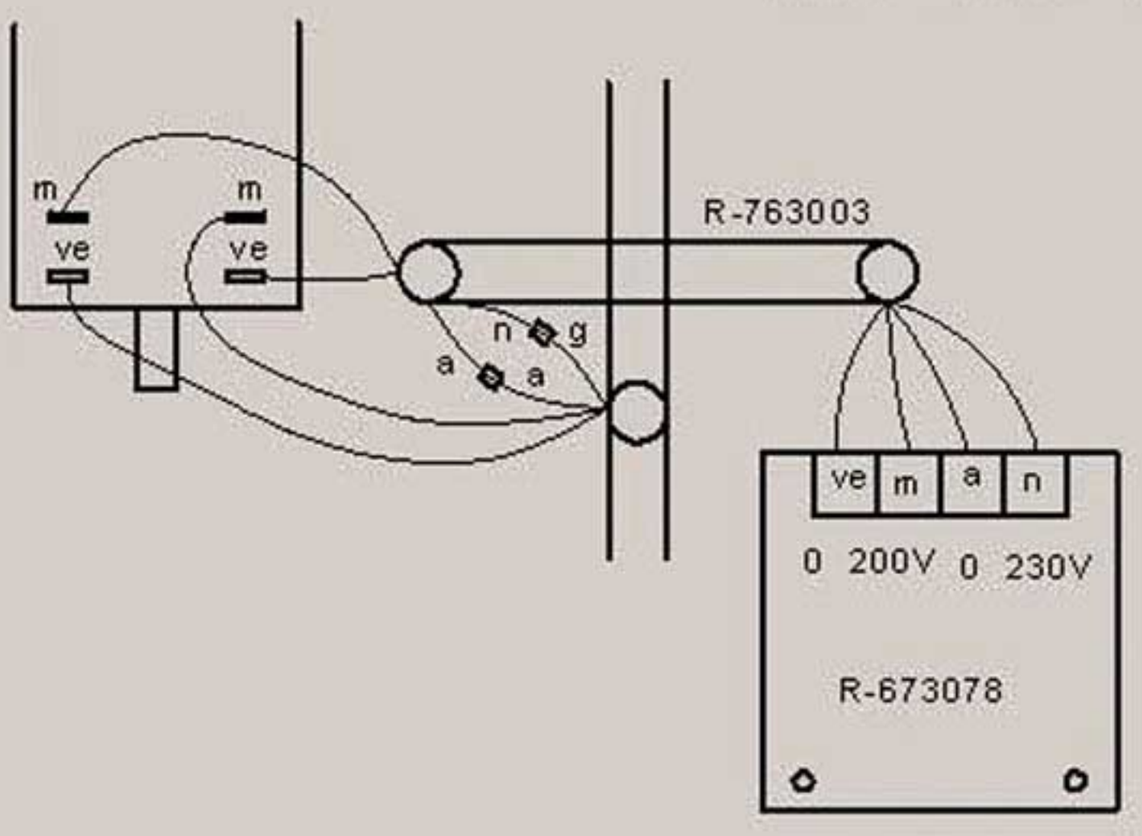

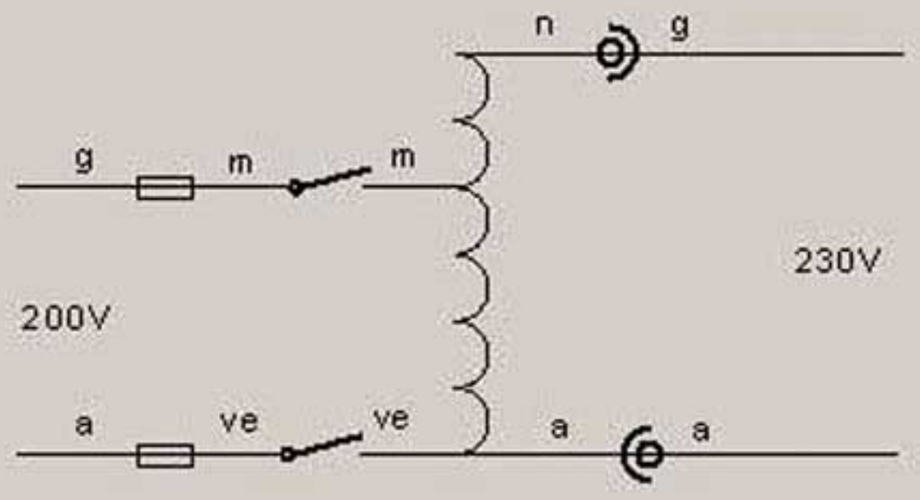

	Plano de montaje			R-693091		
Nº	Pieza	Cant.	Material	N° Clasificacion	Acabado	
Nº	Modificacion		Propuesta de	Fecha	Tolerancias generales	
01	Añadir modificadión necesaria para versión sin neutro		e.carrascal	2008-01-26	<5± / 5–25± / 25–50± / 50–100± / >100± / ∝±	

	Firma	Fecha
Dibujado	KONTXI	7/5/2002
Proyectado		
Comprobado		

FAGOR

Fagor Industrial,Koop.Elk, Mugatua

Mecanizado superficial

Escala

HORNOS

Plano numero HB-72194 -01

Sustituye al N°

Sustituido por

Plano hau ez dakieke erabil ez berriz lagure baimenik gabe