DESPIECE TECNICO

Fry-Tops
Fry-Tops
Fry-Tops
Griddle-Platten
Fry-Tops
Fry-Tops

GAMA 700

Modelos:

FTG7-05
FTG7-10
FTG7-05 V
FTG7-10 V
FTE7-05
FTE7-10

Junio 2008 June

Revisado Septiembre 2010

FAGOR

Fagor Industrial

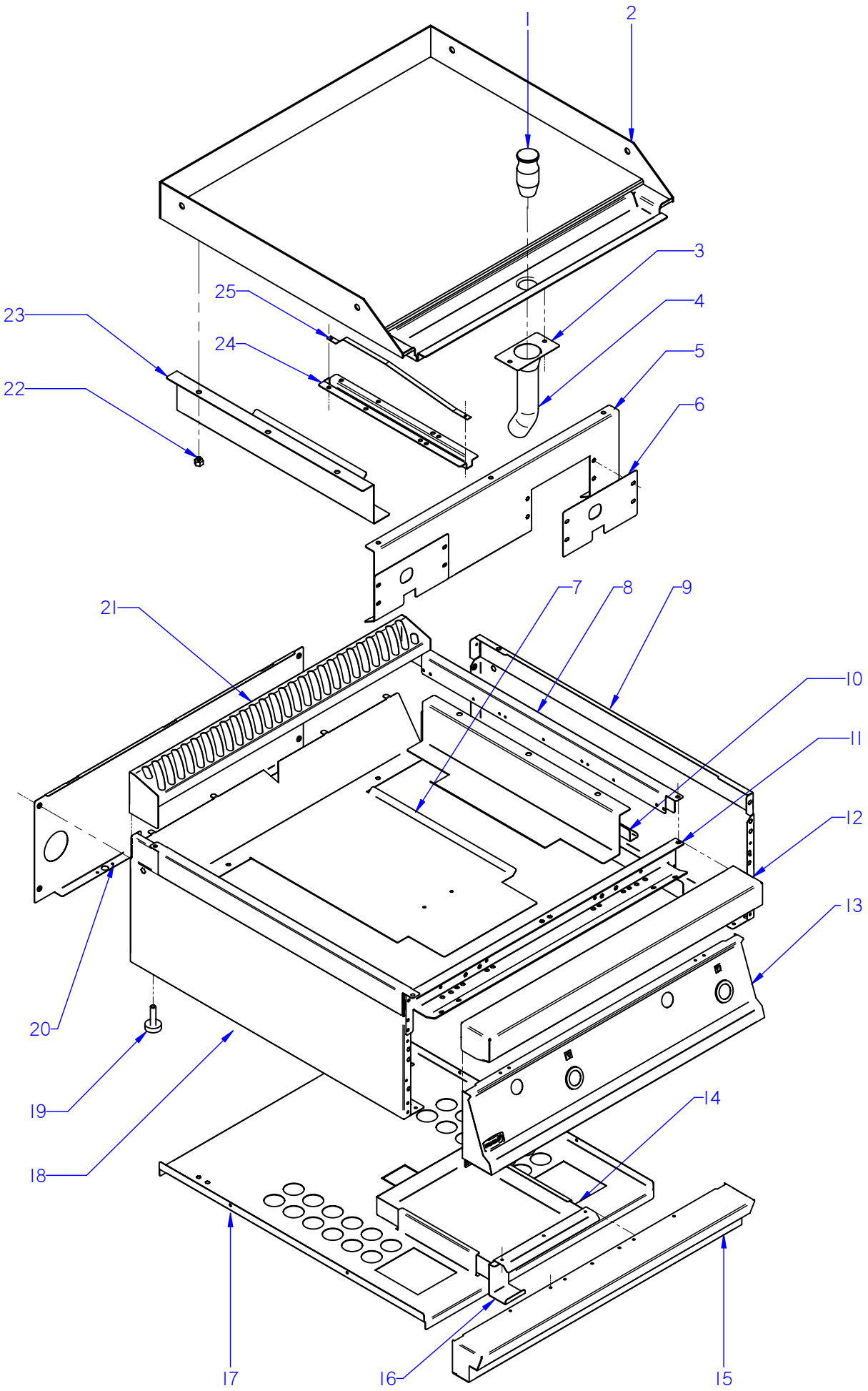

ITEM MARCADO EN COLOR = REPUESTO RECOMENDADO
COLOURED ITEM = RECOMMENDED SPARE PART

N plano	Firma	Fecha	Aparato	MUEBLE	Lamina	
C-2074		2008-06	FRY-TOP FTG7-05 / FTG7-10		1	Fagor Industrial S.Coop. FAGOR Oñate

MOD.	FRY-TOP	ZONA	MUEBLE	PLANO	C-2074

ITEM	CODIGO	DENOMINACION	TEXTO	FTG7-05	FTG7-10	FTG7-05 V	FTG7-10 V				NOTAS
1	R045415000	TAPON DESAGÜE CR-DURO	DRAINAGE CAP CHROME PLATE	1	1	_	_				SOLO CROMO DURO
2	R905409000	PLANCHA FTG-705 L EUROSIT	PLATE FTG-705 L EUROSIT	1	_	_	_				
2	R905424000	PLANCHA FTG-705 R EUROSIT	PLATE FTG-705 R EUROSIT	1	_	_	_				
2	R785411000	PLANCHA FTG/C-705 L EUROSIT	PLATE FTG/C-705 L EUROSIT	1	_	_	_				
2	R905403000	PLANCHA FTG-710 L EUROSIT	PLATE FTG-710 L EUROSIT	_	1	_	_				
2	R905420000	PLANCHA FTG-710 R EUROSIT	PLATE FTG-710 R EUROSIT	_	1	_	_				
2	R905421000	PLANCHA FTG-710 L+R EUROSIT	PLATE FTG-710 L+R EUROSIT	_	1	_	_				
2	R795443000	PLANCHA FTG/C-710 L EUROSIT	PLATE FTG/C-710 L EUROSIT	_	1	_	_				
2	R905413000	PLANCHA FTG-705 L VALVULA	PLATE FTG-705 L VALVE	_	_	1	_				
2	R905427000	PLANCHA FTG-705 R VALVULA	PLATE FTG-705 R VALVE	_	_	1	_				
2	R905408000	PLANCHA FTG-710 L VALVULA	PLATE FTG-710 L VALVE	_	_	_	1				
2	R905422000	PLANCHA FTG-710 R VALVULA	PLATE FTG-710 R VALVE	_	_	_	1				
2	R905423000	PLANCHA FTG-710 L+R VALVULA	PLATE FTG-710 L+R VALVE	_	_	_	1				
3	R152607000	SOPORTE TUBO DESAGÜE	DRAINAGE PIPE SUPPORT	1	1	1	1				
	Q302022000	ARANDELA 16X6X1.2 A.304	WASHER 16X6X1.2 A.304	2	2	2	2				
	Q162040000	TUERCA EXAGONAL M6	HEXAGONAL NUT M6	2	2	2	2				
4	R905024000	TUBO DESAGÜE FRY-TOP G-750Q	DRAINAGE PIPE FRY-TOP G-750	1	1	1	1				
5	R902616000	LISTON FRONTAL FTG-705	FRONT STRIP FTG-705	1	_	_	_				
5	R902615000	LISTON FRONTAL FTG-710	FRONT STRIP FTG-710	_	1	_	_				
5	R905410000	LISTON FRONTAL FTG-710 CD	FRONT STRIP FTG-710 CD	_	1	_	_				
5	R902613000	LISTON FRONTAL FTG-705V	FRONT STRIP FTG-705 V	_	_	1	_				
5	R902609000	LISTON FRONTAL FTG-710V	FRONT STRIP FTG-710 V	_	_	_	1				
	Q012041000	TORNILLO EXAGONAL M6X10 A.304	HEXAGONAL BOLT M6X10 A.304	2	2	2	3				
	Q262040000	ARANDELA GROW. A6 A.304	WASHER GROW. A6 A.304	2	2	2	3				
	Q302022000	ARANDELA 16X6X1.2 A.304	WASHER 16X6X1.2 A.304	2	2	2	3				
6	R902610000	TAPA TUBO ENCEND.FRY-TOP	PIPE COVER LIGHTER. FRY-TOP	1	2	1	2				
	Q221342000	REMACHE EXAGONAL M5	HEXAGONAL RIVET M5	4	8	4	8				
	Q012031000	TORNILLO EXAGONAL M5X10 A.304	HEXAGONAL BOLT M5X10 A.304	4	8	4	8				

MOD.	FRY-TOP	ZONA	MUEBLE	PLANO	C-2074

ITEM	CODIGO	DENOMINACION	TEXTO	FTG7-05	FTG7-10	FTG7-05 V	FTG7-10 V				NOTAS
7	R902620000	SOPORTE DEFLECTOR FTG-705	DEFLECTOR SUPPORT FTG-705	1	_	1	_				
7	R902619000	SOPORTE DEFLECTOR FTG-710	DEFLECTOR SUPPORT FTG-710	_	1	_	1				
	Q419005000	REMACHE 4X8 ALMG3 / ALUMINIO	RIVET 4X8 ALMG3 / ALUMINIUM	4	4	4	4				
	Q221342000	REMACHE EXAGONAL M5	HEXAGONAL RIVET M5	2	2	2	2				
	Q419005000	REMACHE 4X8 ALMG3 / ALUMINIO	RIVET 4X8 ALMG3 / ALUMINIUM	2	2	2	2				
8	R905404000	LISTON LATERAL FRY-TOP	SIDE STRIP FRY-TOP	2	2	2	2				
	Q012031000	TORNILLO EXAGONAL M5X10 A.304	HEXAGONAL BOLT M5X10 A.304	4	4	4	4				
9	H122802000	PANEL LATERAL SUP. DCHO. G700	RIGHT SUP. SIDE PANEL G700	1	1	1	1				
	Q221342000	REMACHE EXAGONAL M5	HEXAGONAL RIVET M5	5	5	5	5				
	Q221343000	REMACHE EXAGONAL M6	HEXAGONAL RIVET M6	5	5	5	5				
	X010503000	CIERRE MUELLE	LOCK SPRING	1	1	1	1				
10	R792605000	TIRANTE LATERAL	SIDE TIE ROD	2	2	2	2				
	Q419005000	REMACHE 4X8 ALMG3 / ALUMINIO	RIVET 4X8 ALMG3 / ALUMINIUM	6	6	6	6				
11	H602602000	ESCUADRA AMARRE ANTER. 1/2 M	FRONT FASTENING BRACKET 1/	1	_	1	_				
11	H602603000	ESCUADRA AMARRE ANTER. 1 M	FRONT FASTENING BRACKET 1	_	1	_	1				
	Q221342000	REMACHE EXAGONAL M5	HEXAGONAL RIVET M5	6	6	6	6				
12	H125403000	ANTERIOR MESA 1/2 M G700	FRONT BENCH 1/2M G700	1	_	1	_				
12	H125409000	ANTERIOR MESA 1 M G700	FRONT BENCH 1M G700	_	1	_	1				
	Q152004000	TORNIL. APLASTADO M5X13 A 304	FLAT HEADED SCREW M5x13 A 3	2	2	2	2				
13	R902814000	PORTAMANDOS FTG-705 EUR	CONTROL HOLDER FTG-705 E	1	_	_	_				
13	R902812000	PORTAMANDOS FTG-710 EUR	CONTROL HOLDER FTG-710 E	_	1	_	_				
13	R902805000	PORTAMANDOS FTG-705 V	CONTROL HOLDER FTG-705 V			1	_				
13	R902802000	PORTAMANDOS FTG-710 V	CONTROL HOLDER FTG-710 V	_	_	_	1				
	Q152004000	TORNIL. APLASTADO M5X13 A 304	FLAT HEADED SCREW M5x13 A 3	4	4	4	4				
	Q221343000	REMACHE EXAGONAL M6	HEXAGONAL RIVET M6	2	2	2	2				
	U912805000	ESCUDO FAGOR G700	FAGOR EMBLEM G700	1	1	1	1				
	Q221023000	CLIP SUJECIÓN RÁPIDA Ø5	RAPID CONNECT CLIP Ø5	2	2	2	2				
14	R902603000	CAJA RECOGEGRASAS G-750Q	GREASE COLLECTION TRAY G-7	1	1	1	1				

MOD.	FRY-TOP	ZONA	MUEBLE	PLANO	C-2074

ITEM	CODIGO	DENOMINACION	TEXTO	FTG7-05	FTG7-10	FTG7-05 V	FTG7-10 V				NOTAS
15	H122815000	ZOCALO ASA 1/2 MÓDULO	SKIRTING ASA 1/2 MODULE	1	_	1	_				
15	H122805000	ZOCALO ASA 1 MÓDULO	SKIRTING ASA 1 MODULE	_	1	_	1				
	Q012031000	TORNILLO EXAGONAL M5X10 A.304	HEXAGONAL BOLT M5X10 A.304	2	2	2	2				
	Q302022000	ARANDELA 16X6X1.2 A.304	WASHER 16X6X1.2 A.304	2	2	2	2				
16	H122816000	REFUERZO ASA	HANDLE REINFORCEMENT	2	2	2	2				
	Q419005000	REMACHE 4X8 ALMG3 / ALUMINIO	RIVET 4X8 ALMG3 / ALUMINIUM	2	2	2	2				
17	R902806000	BASE INFERIOR FTG-705 G-750Q	LOWER BASE FTG-705 G-750Q	1	_	1	_				
17	R902803000	BASE INFERIOR FTG-710 G-750Q	LOWER BASE FTG-710 G-750Q	_	1	_	1				
	Q419005000	REMACHE 4X8 ALMG3 / ALUMINIO	RIVET 4X8 ALMG3 / ALUMINIUM	4	4	4	4				
	Q221342000	REMACHE EXAGONAL M5	HEXAGONAL RIVET M5	2	2	2	2				
18	H122801000	PANEL LATERAL SUP. IZDO. G700	LEFT UPPER SIDE PANEL G700	1	1	1	1				
	Q221342000	REMACHE EXAGONAL M5	HEXAGONAL RIVET M5	5	5	5	5				
	Q221343000	REMACHE EXAGONAL M6	HEXAGONAL RIVET M6	5	5	5	5				
	X010503000	CIERRE MUELLE	LOCK SPRING	1	1	1	1				
	Q221343000	REMACHE EXAGONAL M6	HEXAGONAL RIVET M6	5	5	5	5				
19	Z200107000	PATA REGULABLE	ADJUSTABLE LEG	4	4	4	4				
	Q221345000	REMACHE EXAGONAL M10	HEXAGONAL RIVET M10	4	4	4	4				
20	H602804000	PANEL POSTERI. SUP. G700 1/2M	SUP. REAR PANEL G700 1/2M	1	_	1	_				
20	H602808000	PANEL POSTERIOR SUP. G700 1M	SUP REAR PANEL G700 1M	_	1	_	1				
	Q419005000	REMACHE 4X8 ALMG3 / ALUMINIO	RIVET 4X8 ALMG3 / ALUMINIUM	4	4	4	4				
	X010503000	CIERRE MUELLE	LOCK SPRING	3	3	3	3				
	Q419007000	REMACHE TUBULAR C/V D3.2X6	TUBULAR RIVET C/V D3.2X6	6	6	6	6				
21	H125404000	EMBELLECEDOR POSTER. 1/2 M	REAR TRIM. 1/2 M	1	_	1	_				
21	S565401000	EMBELLECEDOR POSTER. 1 M	REAR TRIM. 1 M	_	1	_	1				
22	R615412000	APOYO LATERAL	SIDE SUPPORT	6	6	6	6				
23	R902618000	PROTECCION LATERAL FTG 710	SIDE PROTECTION FTG 710	2	2	2	2				
24	R162631000	BASE SOPORTE BULBO	BASE BULB SUPPORT	1	2	_	_				
25	R162632000	SOPORTE BULBO	BULB SUPPORT	1	2	_	_				
	Q419005000	REMACHE 4X8 ALMG3 / ALUMINIO	RIVET 4X8 ALMG3 / ALUMINIUM	2	4	_	_				
	Q012043000	TORNILLO EXAGONAL M6X20 A.304	HEXAGONAL BOLT M6X20 A.304	4	8	_	_				

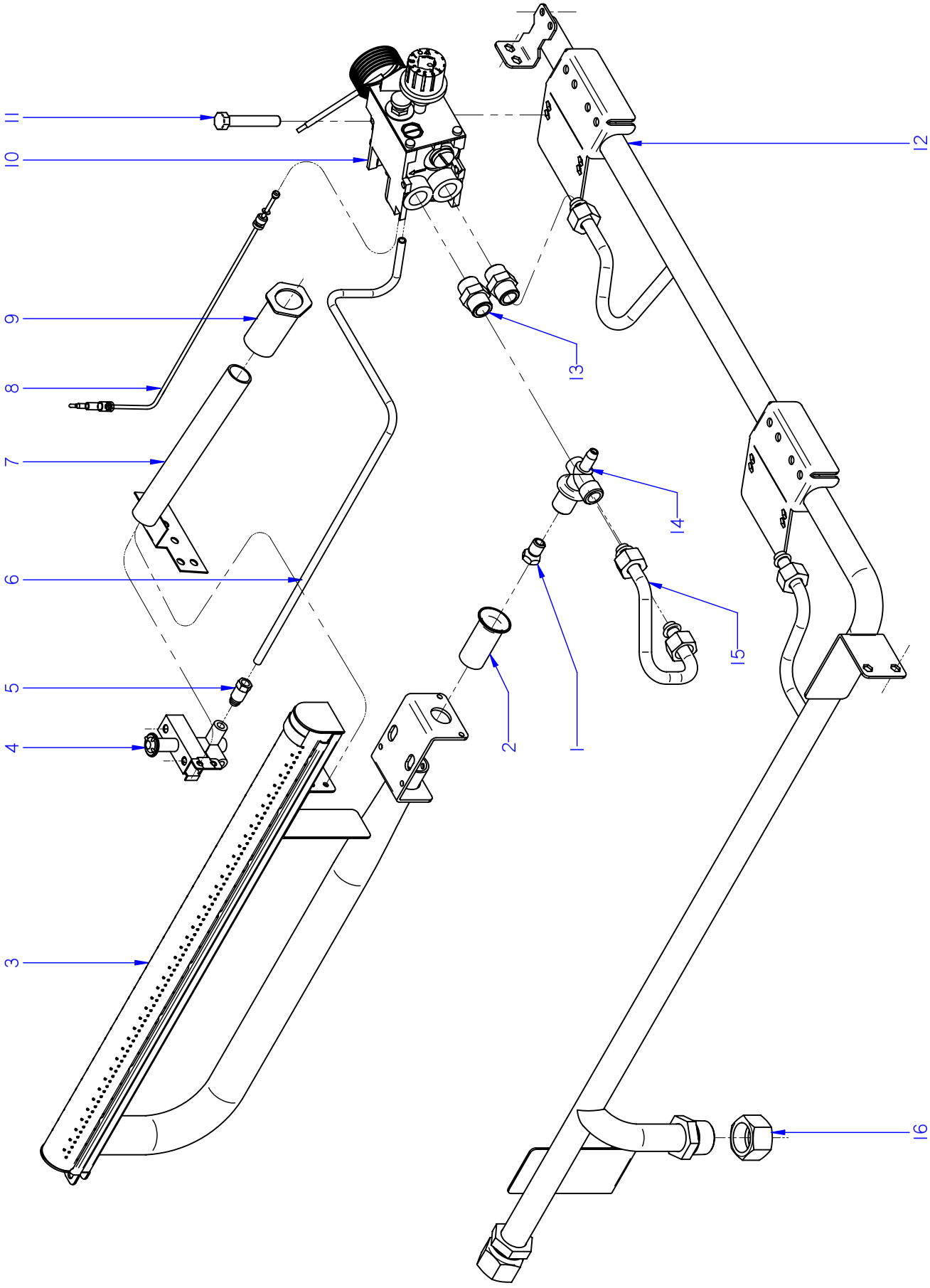

ITEM MARCADO EN COLOR = REPUESTO RECOMENDADO
COLOURED ITEM = RECOMMENDED SPARE PART

N plano	Firma	Fecha	Aparato	Lamina	
C-2075		2008-06	CONJUNTO FUNCIONAL (VALVULA EUROSIT) FRY-TOP FTG7-05 / FTG7-10	2	Fagor Industrial S.Coop. FAGOR Oñate

MOD.	FRY-TOP	ZONA	CONJUNTO FUNCIONAL	PLANO	C-2075

ITEM	CODIGO	DENOMINACION	TEXTO	FTG7-05	FTG7-10	FTGC7-05	FTGC7-10				NOTAS
1	R422400000	TOBERA DE Ø 1.25 B.P.	NOZZLE Ø 1.25 B.P.	1	2	_	_				
1	9271300000	TOBERA DE Ø 1.20 B.P.	NOZZLE Ø 1.20 B.P.	_	_	1	2				
1	9429500000	TOBERA DE Ø 1.90 G.N..	NOZZLE Ø 1.90 G.N..	1	2	_	_				
1	9429400000	TOBERA DE Ø1.80 G.N.	NOZZLE Ø1.80 G.N.	_	_	1	2				
2	U325707000	REGULADOR DE AIRE	AIR REGULATOR	1	2	1	2				
	Q012032000	TORNILLO EXAGONAL M5X15 A.304	HEXAGONAL BOLT M5X15 A.304	1	2	1	2				
3	R905702000	QUEMADOR COMPLETO FTG-710	COMPLETE BURNER FTG-710	1	2	1	2				
	Q419005000	REMACHE 4X8 ALMG3 / ALUMINIO	RIVET 4X8 ALMG3 / ALUMINIUM	2	4	2	4				
	Q012031000	TORNILLO EXAGONAL M5X10 A.304	HEXAGONAL BOLT M5X10 A.304	1	2	1	2				
	Q302022000	ARANDELA 16X6X1.2 A.304	WASHER 16X6X1.2 A.304	1	2	1	2				
4	U322118000	PILOTO COMPLETO 100.062	COMPLETE PILOT LIGHT 100.062	1	2	1	2				
	U442137000	INYECTOR Ø 0.4 GN	INJECTOR Ø 0.4 GN.	1	2	1	2				
	Q012031000	TORNILLO EXAGONAL M5X10 A.304	HEXAGONAL BOLT M5X10 A.304	2	4	2	4				
5	U134323000	RACORD BICONO 6 958.031	BICONE CONNECTION 6 958.031	2	4	2	4				
6	R905031000	TUBO PILOTO FTG EUR. G-750Q	PILOT PIPE FTG EUR. G-750Q	1	2	1	2				
7	R045014000	TUBO ENCENDIDO COMPLETO	COMPLETE IGNITION PIPE	1	2	1	2				
8	U562130000	TERMOPAR L=850	THERMOCOUPLE L=850	1	2	1	2				
9	R042822000	EMBELLECED. TUBO ENCENDIDO	IGNITION PIPE TRIM	1	2	1	2				
	Q221324000	TUERCA 3/4" GAS	NUT 3/4 GAS	1	2	1	2				
10	T982100000	VALVULA 630 EUR 630.343	VALVE 630 EUR 630.343	1	2	1	2				
	Q162030000	TUERCA EXAGONAL M5	HEXAGONAL NUT M5	2	4	2	4				
	Q232030000	ARANDELA A5	WASHER A5	2	4	2	4				
	T982102000	TAPON 3/8 972.061	CAP 3/8 972.061	2	4	2	4				
11	Q011338000	TORNILLO EXAGONAL M5X60	HEXAGONAL SCREW M5X60	2	4	2	4				
12	R905033000	DISTRIB. COM. FTG7-05 EUROSIT	DISTRIB. COM. FTG7-05 EUROSIT	1	_	1	_				
12	R905026000	DISTRIB. COM. FTG-710 EUROSIT	DISTRIB. COM. FTG7-10 EUROSIT	_	1	_	1				
	Q012031000	TORNILLO EXAGONAL M5X10 A.304	HEXAGONAL BOLT M5X10 A.304	4	4	4	4				
	Q302022000	ARANDELA Ø16X6X1.2 A.304	WASHER 16X6X1.2 A.304	4	4	4	4				
	Q221342000	REMACHE EXAGONAL M5	HEXAGONAL RIVET M5	2	2	2	2				
13	R155068000	MANGUITO 3/8"	HOSE 3/8"	2	4	2	4				
	Q306058000	ARANDELA 23,5X17,60X1,5	WASHER 23.5X17.60X1.5	2	4	2	4				

MOD.	FRY-TOP	ZONA	CONJUNTO FUNCIONAL	PLANO	C-2075

ITEM	CODIGO	DENOMINACION	TEXTO	FTG7-05	FTG7-10	FTGC7-05	FTGC7-10				NOTAS
14	U265033000	PORTATOBERAS Ø10	NOZZLE HOLDER Ø10	1	2	1	2				
	Q301323000	ARANDELA Ø25X17X6	WASHER Ø25X17X6	1	2	1	2				
	Q223019000	TUERCA 3/8 GAS LATÓN	NUT 3/8 GAS BRASS	1	2	1	2				
	Q306051000	ARANDELA TAPON D 23.5x3	CAP WASHER Ø 23.5x3	1	2	1	2				
	Q153002000	TORNILLO TAPON	CAP BOLT	1	2	1	2				
15	R905028000	CONDUCC. QUEMADOR FTG EUR	BURNER PIPE FTG EUR	1	2	1	2				
	Q306062000	ARANDELA Ø13,9X10,33x1,5	WASHER Ø13.9X10.33x1.5	2	4	2	4				
16	U635008000	TUERCA CIEGA 3/4	BLIND NUT 3/4	1	1	1	1				

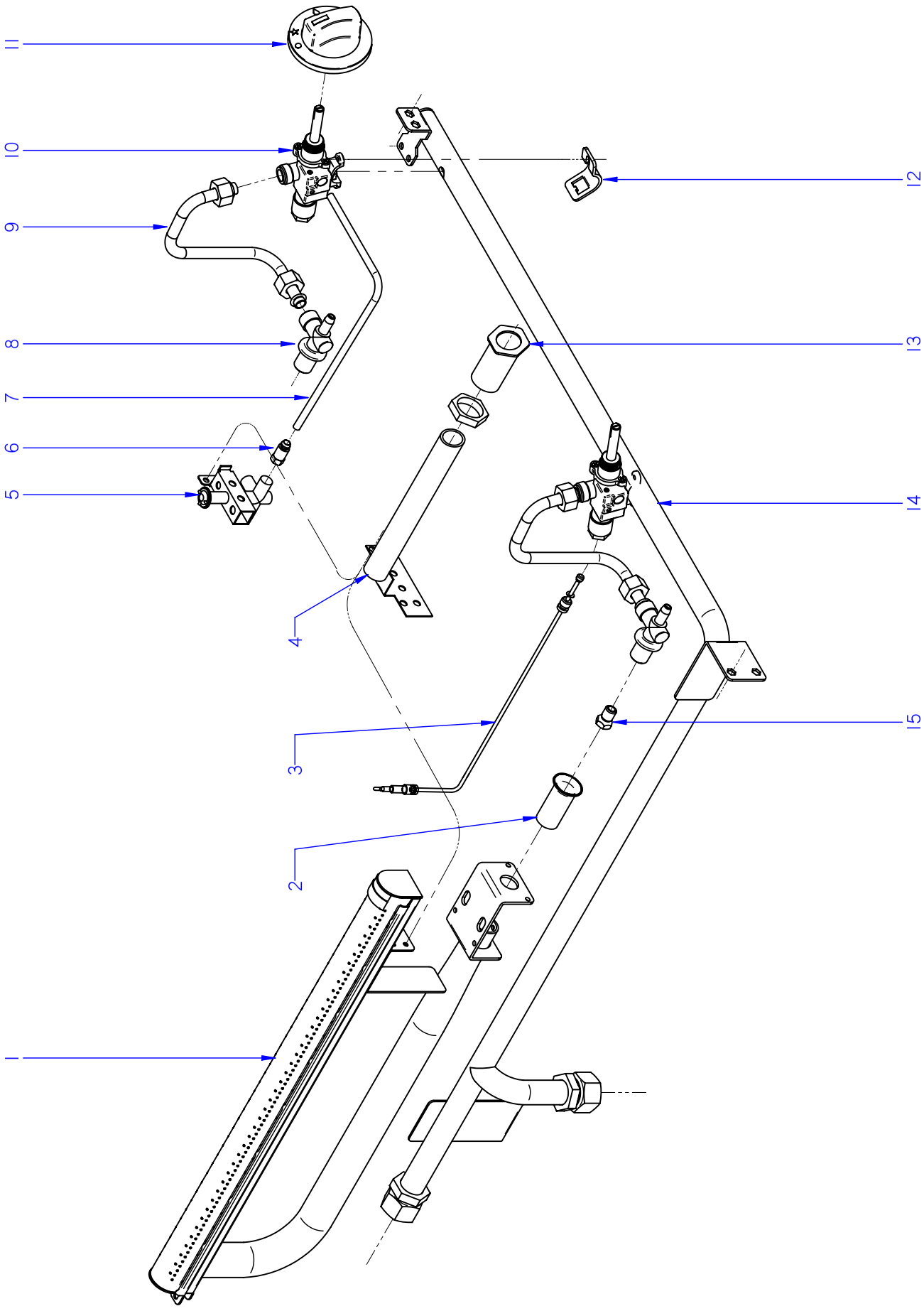

ITEM MARCADO EN COLOR = REPUESTO RECOMENDADO
COLOURED ITEM = RECOMMENDED SPARE PART

N plano	Firma	Fecha	Aparato	Lamina	
C-2076		2008-06	CONJUNTO FUNCIONAL FRY-TOP FTG7-05 V / FTG7-10 V	3	Fagor Industrial S.Coop. Oñate

MOD.	FRY-TOP	ZONA	CONJUNTO FUNCIONAL	PLANO	C-2076

ITEM	CODIGO	DENOMINACION	TEXTO	FTG7-05 V	FTG7-10 V						NOTAS
1	R905702000	QUEMADOR COMPLETO FTG-710	COMPLETE BURNER FTG-710	1	2						
	Q419005000	REMACHE 4X8 ALMG3 / ALUMINIO	RIVET 4X8 ALMG3 / ALUMINIUM	2	4						
	Q012031000	TORNILLO EXAGONAL M5X10 A.304	HEXAGONAL BOLT M5X10 A.304	1	2						
	Q302022000	ARANDELA 16X6X1.2 A.304	WASHER 16X6X1.2 A.304	1	2						
2	U325707000	REGULADOR DE AIRE	AIR REGULATOR	1	2						
	Q012032000	TORNILLO EXAGONAL M5X15 A.304	HEXAGONAL BOLT M5X15 A.304	1	2						
3	U562130000	TERMOPAR L=850	THERMOCOUPLE L=850	1	2		2				
4	R045014000	TUBO ENCENDIDO COMPLETO	COMPLETE IGNITION PIPE	1	2						
5	U322118000	PILOTO COMPLETO 100.062	COMPLETE PILOT LIGHT 100.062	1	2						
	U442137000	INYECTOR Ø 0.4 GN	INJECTOR Ø 0.4 GN.	1	2						
	Q012031000	TORNILLO EXAGONAL M5X10 A.304	HEXAGONAL BOLT M5X10 A.304	2	4						
6	U134323000	RACORD BICONO 6 958.031	BICONE CONNECTION 6 958.031	2	4						
7	R905016000	TUBO PILOTO FTG-710 V G-750Q	PILOT PIPE FTG-710 V G-750Q	1	2						
8	U265033000	PORTATOBERAS Ø10	NOZZLE HOLDER Ø10	1	2						
	Q301323000	ARANDELA Ø25X17X6	WASHER Ø25X17X6	1	2						
	Q223019000	TUERCA 3/8 GAS LATÓN	NUT 3/8 GAS BRASS	1	2						
	U635008000	TUERCA CIEGA 3/4	BLIND NUT 3/4	1	2						
	Q306051000	ARANDELA TAPON D 23.5x3	CAP WASHER Ø 23.5x3	1	2						
	Q153002000	TORNILLO TAPON	CAP BOLT	1	2						
9	R905014000	CONDUCCION QUEMADOR V FTG	BURNER PIPE V FTG	1	2						
	Q306062000	ARANDELA Ø13,9X10,33x1,5	WASHER Ø13.9X10.33x1.5	2	4						
10	R902102000	GRIFO 18700 BY-PASS 0,9	TAP 18700 BY-PASS 0.9	1	2						
11	H122101000	BOTON DE MANDO Ø8 G700	CONTROL BUTTON Ø8 G700	1	2						
12	U912104000	BRIDA AMARRE GRIFO 1/2"	TAP FASTENING FLANGE 1/2"	1	2						
	Q122032000	TORNILLO ALLEN M.5x15	ALLEN HEAD SCREW M.5x15	2	4						
13	R042822000	EMBELLECED. TUBO ENCENDIDO	IGNITION PIPE TRIM	1	2						
	Q221324000	TUERCA 3/4" GAS	NUT 3/4 GAS	1	2						

MOD.	FRY-TOP	ZONA	CONJUNTO FUNCIONAL	PLANO	C-2076

ITEM	CODIGO	DENOMINACION	TEXTO	FTG7-05 V	FTG7-10 V						NOTAS
14	R905023000	DISTRIBUCION COMPL. FTG-705 V	COMPL. DISTRIBUTION FTG-705	1	_						
14	R905010000	DISTRIBUCION COMPL. FTG7-10 V	COMPL. DISTRIBUTION FTG7-10	_	1						
	Q012031000	TORNILLO EXAGONAL M5X10 A.304	HEXAGONAL BOLT M5X10 A.304	4	4						
	Q302022000	ARANDELA Ø16X6X1.2 A.304	WASHER 16X6X1.2 A.304	4	4						
	Q221342000	REMACHE EXAGONAL M5	HEXAGONAL RIVET M5	2	2						
15	R422400000	TOBERA DE Ø 1.25 B.P.	NOZZLE Ø 1.25 B.P.	1	2						
15	9429500000	TOBERA DE Ø1.90 G.N.	NOZZLE Ø1.90 G.N.	1	2						

MOD.	FRY-TOP	ZONA	VARIOS	PLANO	

ITEM	CODIGO	DENOMINACION	TEXTO	FTG7-05	FTG7-10	FTG7-05 V	FTG7-10 V				NOTAS
	R046501000	FOLLETO DE INSTRUCC. FTG 700	INSTRUCTION LEAFLET FTG 700	1	1	1	1				
	R636500000	RASQUETA MARTOR	MARTOR SCRAPER	1	1	_	_				SOLO CROMO DURO

MOD.	FRY-TOP	ZONA	PIEZAS ESPECIFICAS PARA LA VERSION AUSTRALIA	PLANO	C-2074-75

ITEM	CODIGO	DENOMINACION	TEXTO	FTG7-05 A	FTG7-10 A						NOTAS
		PIEZAS QUE SE ELIMINAN	**PARTS WHICH HAVE BEEN SUPI**								
13	R902814000	PORTAMANDOS FTG-705 EUR	CONTROL HOLDER FTG-705 E	1	_						PLANO C-2074
13	R902812000	PORTAMANDOS FTG-710 EUR	CONTROL HOLDER FTG-710 E	_	1						PLANO C-2074
1	R422400000	TOBERA DE Ø 1.25 B.P.	NOZZLE Ø 1.25 B.P.	1	2						PLANO C-2075
1	9429500000	TOBERA DE Ø 1.90 G.N..	NOZZLE Ø 1.90 G.N..	1	2						PLANO C-2075
		PIEZAS QUE SE INTRODUCEN	**PARTS WHICH HAVE BEEN INTR**								
13	R902817000	PORTAMANDOS FTG-705 EUR A	CONTROL HOLDER FTG-705 E	1	_						PLANO C-2074
13	R902819000	PORTAMANDOS FTG-710 EUR A	CONTROL HOLDER FTG-710 E	_	1						PLANO C-2074
1	U052402000	TOBERA DE Ø 1.30 B.P.	NOZZLE Ø 1.30 B.P.	1	2						PLANO C-2075
1	R275050000	TOBERA DE Ø 2,35 G.N..	NOZZLE Ø 2,35 G.N..	1	2						PLANO C-2075
S/Nº	S113034000	PIEZOELECTRICO	PIEZOELECTRIC	1	2						
S/Nº	X022131000	BUJIA	SPARK PLUG	1	2						
S/Nº	U323030000	CABLE BUJIA	SPARK PLUG CABLE	1	2						
S/Nº	U333003000	CABLE MASA ENCENDEDOR	LIGHTER EARTH CABLE	1	2						

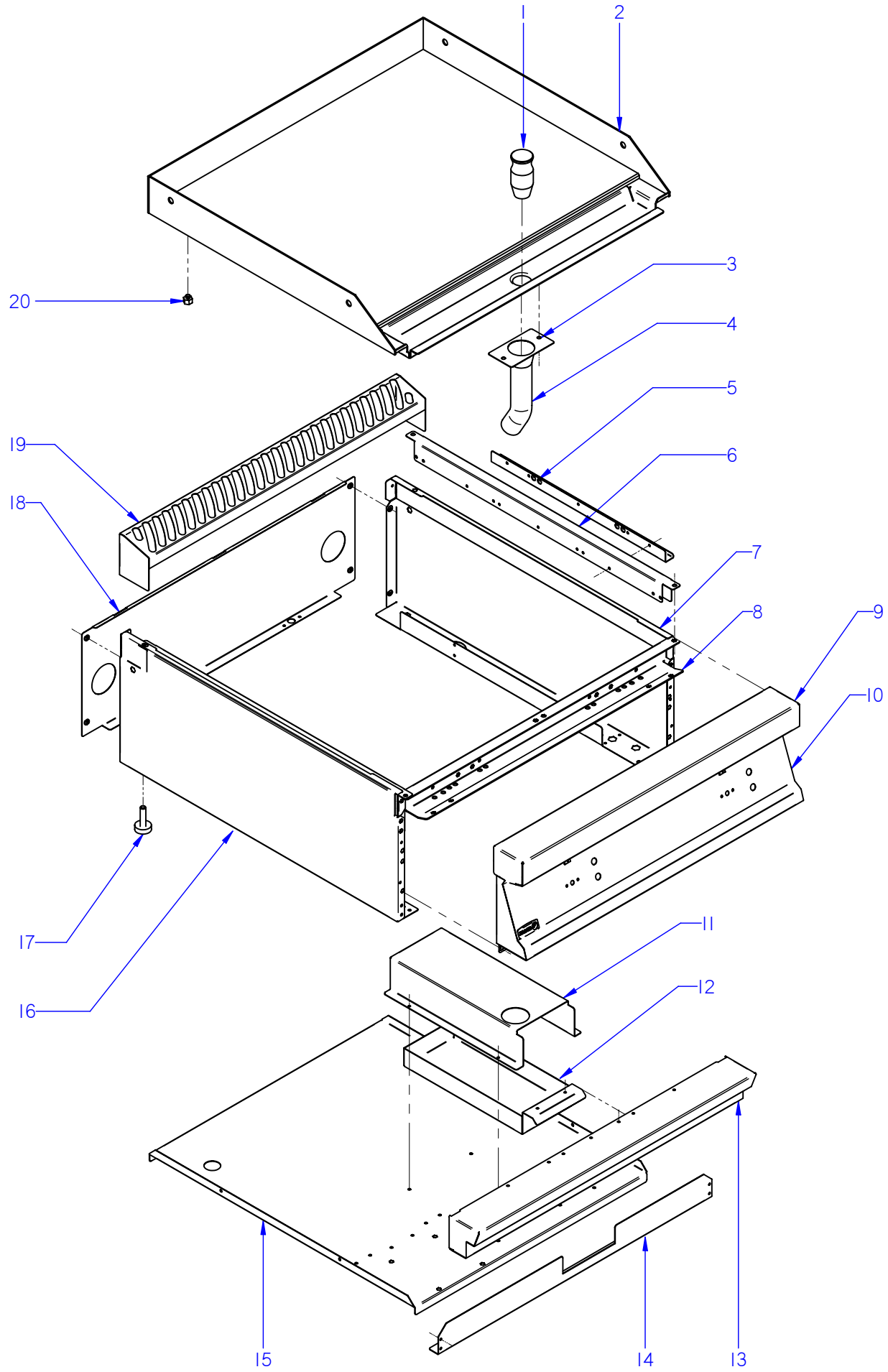

ITEM MARCADO EN COLOR = REPUESTO RECOMENDADO
COLOURED ITEM = RECOMMENDED SPARE PART

N plano	Firma	Fecha	Aparato	MUEBLE	Lamina	
C-2077		2008-06	FRY-TOP FTE7-05 / FTE7-10		4	Fagor Industrial S.Coop. FAGOR Onate

MOD.	FRY-TOP		MUEBLE								C-2077
ITEM	CODIGO	DENOMINACION		FTE7-05	FTE7-10						NOTAS
1	R045415000	TAPON DESAGÜE CR-DURO	DRAINAGE CAP CHROME PLATE	1	1						SOLO CROMO DURO
2	R915404000	PLANCHA FTE-705 l	PLATE FTE-705 L	1	_						
2	R915410000	PLANCHA FTE-705 R	PLATE FTE-705 R	1	_						
2	R885423000	PLANCHA FTE/C-705 L	PLATE FTE/C-705 L	1	_						
2	R915402000	PLANCHA FTE-710 L	PLATE FTE-710 L	_	1						
2	R915408000	PLANCHA FTE-710 R	PLATE FTE-710 R	_	1						
2	R915409000	PLANCHA FTE-710 L+R	PLATE FTE-710 L+R	_	1						
2	R895435000	PLANCHA FTE/C-710 L	PLATE FTE/C-710 L	_	1						
3	R152607000	SOPORTE TUBO DESAGÜE	DRAINAGE PIPE SUPPORT	1	1						
	Q302022000	ARANDELA 16X6X1.2 A.304	WASHER 16X6X1.2 A.304	2	2						
	Q162040000	TUERCA EXAGONAL M6	HEXAGONAL NUT M6	2	2						
4	R905024000	TUBO DESAGÜE FRY-TOP G-750Q	DRAINAGE PIPE FRY-TOP G-750	1	1						
5	R792605000	TIRANTE LATERAL	SIDE TIE ROD	2	2						
	Q419005000	REMACHE 4X8 ALMG3 / ALUMINIO	RIVET 4X8 ALMG3 / ALUMINIUM	6	6						
6	R905404000	LISTON LATERAL FRY-TOP	SIDE STRIP FRY-TOP	2	2						
	Q012031000	TORNILLO EXAGONAL M5X10 A.304	HEXAGONAL BOLT M5X10 A.304	4	4						
7	H122802000	PANEL LATERAL SUP. DCHO. G700	RIGHT SUP. SIDE PANEL G700	1	1						
	Q221342000	REMACHE EXAGONAL M5	HEXAGONAL RIVET M5	5	5						
	Q221343000	REMACHE EXAGONAL M6	HEXAGONAL RIVET M6	5	5						
	X010503000	CIERRE MUELLE	LOCK SPRING	1	1						
8	H602602000	ESCUADRA AMARRE ANTER. 1/2 M	FRONT FASTENING BRACKET 1/	1	_						
8	H602603000	ESCUADRA AMARRE ANTER. 1 M	FRONT FASTENING BRACKET 1	_	1						
	Q221342000	REMACHE EXAGONAL M5	HEXAGONAL RIVET M5	6	6						
	Q012031000	TORNILLO EXAGONAL M5X10 A.304	HEXAGONAL BOLT M5X10 A.304	6	6						
9	H125403000	ANTERIOR MESA 1/2 M	FRONT BENCH 1/2M	1	_						
9	H125409000	ANTERIOR MESA 1 M	FRONT BENCH 1M	_	1						
	Q152004000	TORNIL. APLASTADO M5X13 A 304	FLAT HEADED SCREW M5x13 A 3	2	2						

MOD.	FRY-TOP		MUEBLE								C-2077
ITEM	CODIGO	DENOMINACION		FTE7-05	FTE7-10						NOTAS
10	R912804000	PANEL PORTAMANDOS FTE7-05	CONTROL HOLDER PANEL FTE7	1	_						
10	R912802000	PANEL PORTAMANDOS FTE7-10	CONTROL HOLDER PANEL FTE7	_	1						
	Q152004000	TORNIL. APLASTADO M5X13 A 304	FLAT HEADED SCREW M5x13 A 3	4	4						
	Q221343000	REMACHE EXAGONAL M6	HEXAGONAL RIVET M6	2	2						
	U912813000	ESCUDO ASPES G700	ASPES EMBLEM G700	1	1						
	Q221023000	CLIP SUJECIÓN RÁPIDA Ø5	RAPID CONNECT CLIP Ø5	2	2						
11	R912603000	CUBIERTA RECOGEGRASAS G-700	GREASE COLLECTION TRAY G-7	1	1						
	Q419005000	REMACHE 4X8 ALMG3 / ALUMINIO	RIVET 4X8 ALMG3 / ALUMINIUM	4	4						
12	R912604000	CAJA RECOGEGRASAS EL G-750Q	GREASE COLLECTION TRAY EL (	1	1						
13	H122815000	ZOCALO ASA 1/2 MÓDULO	SKIRTING ASA 1/2 MODULE	1	_						
13	H122805000	ZOCALO ASA 1 MÓDULO	SKIRTING ASA 1 MODULE	_	1						
	Q012031000	TORNILLO EXAGONAL M5X10 A.304	HEXAGONAL BOLT M5X10 A.304	2	2						
	Q302022000	ARANDELA 16X6X1.2 A.304	WASHER 16X6X1.2 A.304	2	2						
14	R912605000	PROTECCION CABLEADO FTE-705	WIRING PROTECTION FTE-705	1	_						
14	R912606000	PROTECCION CABLEADO FTE-710	WIRING PROTECTION FTE-710	_	1						
	Q419005000	REMACHE 4X8 ALMG3 / ALUMINIO	RIVET 4X8 ALMG3 / ALUMINIUM	4	4						
15	R912602000	BASE INFERIOR FTE-705 G-750Q	LOWER BASE FTE-705 G-750Q	1	_						
15	R912601000	BASE INFERIOR FTE-710 G-750Q	LOWER BASE FTE-710 G-750Q	_	1						
	Q419005000	REMACHE 4X8 ALMG3 / ALUMINIO	RIVET 4X8 ALMG3 / ALUMINIUM	4	4						
	Q221342000	REMACHE EXAGONAL M5	HEXAGONAL RIVET M5	2	4						
16	H122801000	PANEL LATERAL SUP. IZDO. G700	LEFT UPPER SIDE PANEL G700	1	1						
	Q221342000	REMACHE EXAGONAL M5	HEXAGONAL RIVET M5	5	5						
	Q221343000	REMACHE EXAGONAL M6	HEXAGONAL RIVET M6	5	5						
	X010503000	CIERRE MUELLE	LOCK SPRING	1	1						
	Q221343000	REMACHE EXAGONAL M6	HEXAGONAL RIVET M6	5	5						
17	Z200107000	PATA REGULABLE	ADJUSTABLE LEG	4	4						
	Q221345000	REMACHE EXAGONAL M10	HEXAGONAL RIVET M10	4	4						

MOD.	FRY-TOP		MUEBLE								C-2077
ITEM	CODIGO	DENOMINACION		FTE7-05	FTE7-10						NOTAS
18	H602804000	PANEL POSTERI. SUP. G700 1/2M	SUP. REAR PANEL G700 1/2M	1	_						
18	H602808000	PANEL POSTERIOR SUP. G700 1M	SUP REAR PANEL G700 1M	_	1						
	Q419005000	REMACHE 4X8 ALMG3 / ALUMINIO	RIVET 4X8 ALMG3 / ALUMINIUM	4	4						
	X010503000	CIERRE MUELLE	LOCK SPRING	3	3						
	Q419007000	REMACHE TUBULAR C/V D3.2X6	TUBULAR RIVET C/V D3.2X6	6	6						
19	H125404000	EMBELLECEDOR POSTER. 1/2 M	REAR TRIM. 1/2 M	1	_						
19	S565401000	EMBELLECEDOR POSTER. 1 M	REAR TRIM. 1 M	_	1						
20	R615412000	APOYO LATERAL	SIDE SUPPORT	6	6						

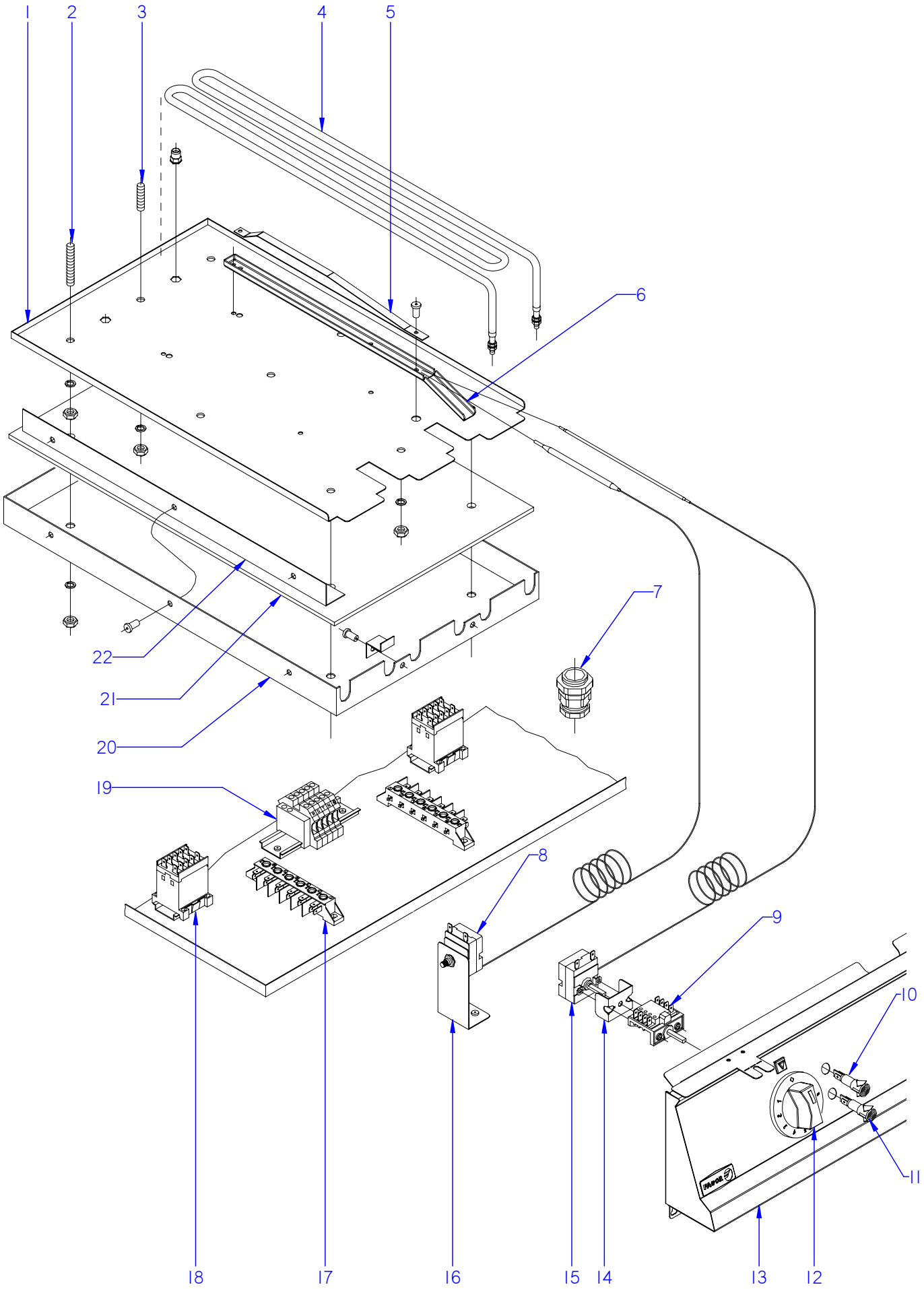

ITEM MARCADO EN COLOR = REPUESTO RECOMENDADO
COLOURED ITEM = RECOMMENDED SPARE PART

N plano	Firma	Fecha	Aparato	Lamina	
C-2078		2008-06	CONJUNTO FUNCIONAL ELECTRICO FRY-TOP FTE7-05 / FTE7-10	5	Fagor Industrial S.Coop. FAGOR Oñate

MOD.	FRY-TOP	ZONA	CONJUNTO FUNCIONAL ELECTRICO	PLANO	C-2078

ITEM	CODIGO	DENOMINACION	TEXTO	FTE7-05	FTE7-10						NOTAS
1	R912611000	AMARRE RESISTENCIAS FTE-705	RESISTOR FASTENING FTE-705	1	_						
1	R912607000	AMARRE RESISTENCIAS FTE-710	RESISTOR FASTENING FTE-710	_	2						
	Q162050000	TUERCA EXAGONAL M8	HEXAGONAL BOLT M8	9	18						
	Q262050000	ARANDELA GROW. A8 A.304	WASHER GROW. A8 A.304	9	18						
2	Q131557000	VARILLA ROSCADA M8X50	THREADED ROD M8X50	4	8						
3	Q131555000	VARILLA ROSCADA M8x30	THREADED ROD M8X30	5	10						
	Q221342000	REMACHE EXAGONAL M5	HEXAGONAL RIVET M5	_	2						
4	R893000000	RESISTENCIA 230V	RESISTOR 230V	3	6						
5	R912608000	SOPORTE BULBO FTE-700	BULB SUPPORT FTE-700	1	2						
6	R912609000	BASE SOPORTE BULBO FTE-700	BASE BULB SUPPORT FTE-700	1	2						
	Q419005000	REMACHE 4X8 ALMG3 / ALUMINIO	RIVET 4X8 ALMG3 / ALUMINIUM	2	4						
7	R013022000	PRENSA ESTOPAS	STUFFING BOX	1	_						
7	R023013000	PRENSA ESTOPAS PG-21	STUFFING BOX PG-21	_	1						
8	R612103000	TERMOSTATO LIMITADOR	THERMOSTAT LIMITER	1	2						
9	X163007000	CONMUTADOR ACOPLE TERMOS	THERMOSTAT CONNECT SWITC	1	2						
10	R693055000	PILOTO VERDE 41227000C7	GREEN PILOT 41227000C7	1	2						
11	R693056000	PILOTO AMBAR 41227000A4	AMBER PILOT 41227000A4	1	2						
12	X482102000	BOTON DE MANDO Ø6 ASPES	CONTROL BUTTON Ø6 ASPES	1	2						
13	R912804000	PANEL PORTAMANDOS FTE7-05	CONTROL HOLDER PANEL FTE7	1	_						
13	R912802000	PANEL PORTAMANDOS FTE7-10	CONTROL HOLDER PANEL FTE7	_	1						
14	X313001000	U SOPORTE TERMOSTATO	THERMOSTAT U SUPPORT	1	2						
15	X153000000	TERMOSTATO 50-310 C	THERMOSTAT 50-310 C	1	2						
	Q151320000	TOR. ALOMADO M4X6 H.ZINCADO	CURVED SCREW M4X6 H. ZINC	2	4						
16	R572607000	SOPORTE LIMITADOR	LIMITER SUPPORT	1	2						
	Q419005000	REMACHE 4X8 ALMG3 / ALUMINIO	RIVET 4X8 ALMG3 / ALUMINIUM	2	4						
17	R253044000	REGLETA AUXILIAR FV-122	AUXILIARY TERMINAL STRIP FV-	1	2						
	Q152004000	TORNIL. APLASTADO M5X13 A 304	FLAT HEADED SCREW M5x13 A 3	2	4						
	Q162030000	TUERCA EXAGONAL M5	HEXAGONAL NUT M5	2	4						
18	Z213007000	CONTACTOR 230 V. 50-60 HZ	CONTACTOR 230 V. 50-60 HZ	1	2						
	Z123018000	GUIA CONTACTOR L-55	CONTACTOR GUIDE L-55	1	2						
	Q419005000	REMACHE 4X8 ALMG3 / ALUMINIO	RIVET 4X8 ALMG3 / ALUMINIUM	2	4						

MOD.	FRY-TOP	ZONA	CONJUNTO FUNCIONAL ELECTRICO	PLANO	C-2078

ITEM	CODIGO	DENOMINACION	TEXTO	FTE7-05	FTE7-10						NOTAS
19	P453025000	BORNES 10 WDU-10203.O	TERMINALS 10 WDU-10203.O	_	3						
	P453026000	BORNE TIER 10 WPE-10103.O	TERMINAL TIER 10 WPE-10103.O	_	1						
	Z263302000	BORNA DE PASO AZUL	BLUE THROUGH TERMINAL	_	1						
	Z263303000	TOPE FINAL	END STOP	_	1						
	Z683068000	SEÑALIZ.DEK-6WEIDMULLER	SIGNS DEK-6WEIDMULLER	_	1						
	R663054000	GUIA CONTACTOR 320	CONTACTOR GUIDE 320	_	1						
	Q419005000	REMACHE 4X8 ALMG3 / ALUMINIO	RIVET 4X8 ALMG3 / ALUMINIUM	_	2						
20	R912612000	CUBIERTA RESISTENC. FTE-705	RESISTOR COVER FTE -705	1	_						
20	R912613000	CUBIERTA RESISTENC. FTE-710	RESISTOR COVER FTE -710	_	2						
	Q162050000	TUERCA EXAGONAL M8	HEXAGONAL BOLT M8	4	8						
	Q262050000	ARANDELA GROW. A8 A.304	WASHER GROW. A8 A.304	4	8						
21	R885410000	AISLANTE DE RESISTENCIAS	RESISTOR INSULATION	1	_						
21	R895410000	AISLANTE DE RESISTENCIAS	RESISTOR INSULATION	_	2						
22	R892602000	FIJACION LATERAL FTE-700	SIDE FASTENING FTE-700	2	4						
	Q419005000	REMACHE 4X8 ALMG3 / ALUMINIO	RIVET 4X8 ALMG3 / ALUMINIUM	4	8						

MOD.	FRY-TOP	ZONA	VARIOS	PLANO	

ITEM	CODIGO	DENOMINACION	TEXTO	FTE7-05	FTE7-10						NOTAS
	R056501000	FOLLETO DE INSTRUCC. FTE 700	INSTRUCTION LEAFLET FTE 700	1	1						
	R636500000	RASQUETA MARTOR	MARTOR SCRAPER	1	1						SOLO CROMO DURO
	R563000000	ESQUEMA TEORICO ADHESIVO	THEOR. DIAGRAM LABEL	1	_						PLANO HB-14936
	R573001000	ESQUEMA TEORICO ADHESIVO	THEOR. DIAGRAM LABEL	_	1						PLANO HC-71227
	R573005000	ESQUEMA MONTAJE	ASSEMBLY DIAGRAM	1	1						PLANO HC-71229
	R223000000	CABLEADO PORTAMANDOS FTE	CONTROL HOLDER WIRING FTE	1	2						
	R223003000	CABLEADO CONT. RESISTENCIAS	CONNECT. WIRING RESISTORS	1	2						
	R223002000	CABLEADO REGLETA CONTACT.	CONTACTOR CONTROL WIRING	1	2						
	R573003000	CABLE LIMITADOR	LIMITER CABLE	1	2						
	R573002000	CABLEADO REGLETA BORNAS	TERMINAL STRIP WIRING	_	2						
	X183008000	CABLEADO REGLETA CONTACT.	CONTACTOR CONTROL WIRING	_	2						

FTE-905 FTE-705

NOTAS

- Las inscripciones resistirán sin modificación apreciable el frotamiento durante 15 seg. de un algodón impregnado en gasolina.

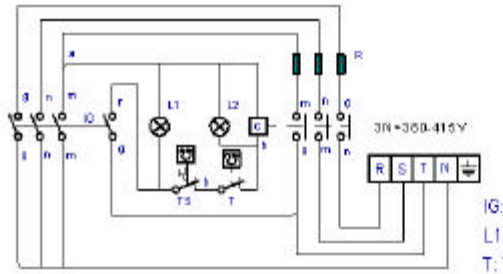

IG: Interruptor general
L1: Lámpara funcionamiento
T: Termostato regulable (50-310°C)
L2: Lámpara calentamiento
C: Contactor de calentamiento
R: Resistencias
TS: Termostato seguridad (400°C)



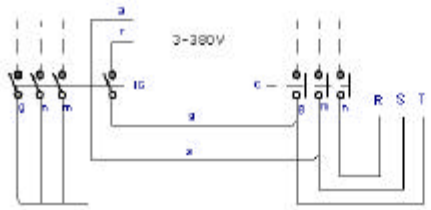

r = rojo-red-rouge
m = marron-brown-marron
g = gris-grey-gris
n = negro-black-noir
a = azul-blue-bleu
b = blanco-white-blanco
vi = violeta-violeta-violet
am/ve = amarillo/verde
yellow/green
jaune/vert

	Esquema teorico adhesivo			R-563000		
Nº	Pieza	Cant.	Material	Nº Clasificacion	Acabado	
Nº	Modificacion		Propuesta de	Fecha	Tolerancias generales	
①	Introducir TS		Maillo	95-6-14		
②	Introducir FTE-705		Etxeberria	1-7-97	≤5± 5–25± 25–50±	50–100± ≥100±
③	Introducir G-700		Etxeberria	8-7-97		

	Firma	Fecha
Dibujado	JON	95-5-23
Proyectado		
Comprobado		

FAGOR

Fagor Industrial, Hoop. Elk, Mugetus

Mecanizado superficial

Escala

FRY-TOP

Plano numero HB-14936 -3

Sustituye al Nº

Sustituido por

Plano inscrito en el registro de la propiedad intelectual

FTE-910 FTE-710

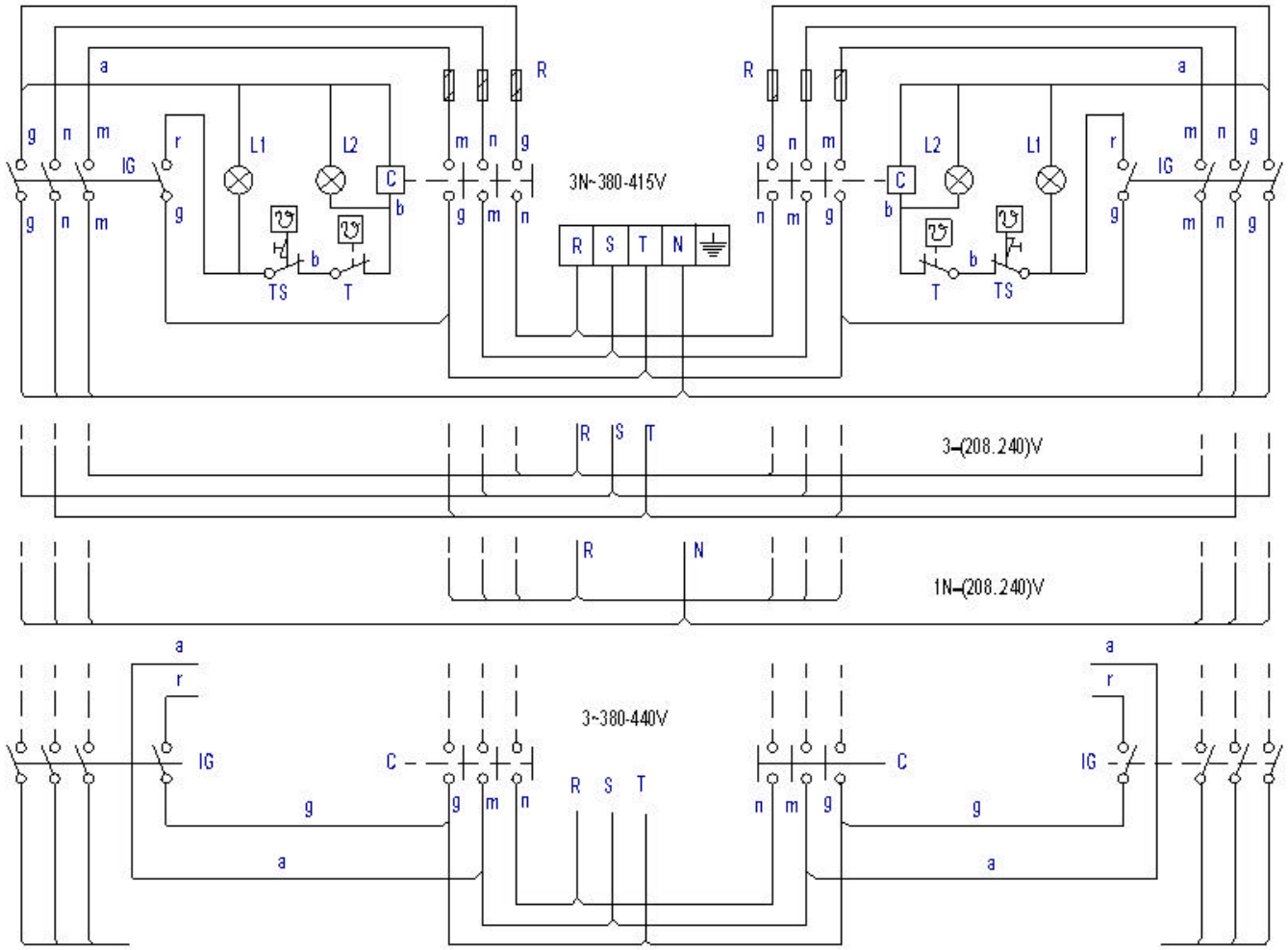

IG: Interruptor general

L1: Lámpara funcionamiento

T: Termos.regulable(50-310 °C)

L2: Lámpara calentamiento

C: Contactor calentamiento

R: Resistencias

TS: Termos.seguridad(400°c)

r = rojo-red-rouge

m = marron-brown-marron

g = gris-grey-gris

n = negro-black-noir

a = azul-blue-bleu

b = blanco-white-blanc

vi = violeta-violette-violet

am/ve = amarillo/verde

yellow/green

jaune/vert

R-573001

	Esquema teorico adhesivo		R-573001		
N°	Pieza	Material	N° Clasificacion	Acabado	
N°	Modificacion	Propuesta de	Fecha	Tolerancias generales	
				<5±	50–100± :
				5 –25± :	>100±
				25 –50± :	<X±

	Firma	Fecha
Dibujado	Implazaola	31-05-05
Proyectado		
Comprobado	Letona	

FAGOR

Fagor Industrial,Koop.Elk, Mugatua

Mecanizado superficial

Escala 1/1

FRY-TOP

Plano numero HC-71227

Sustituye al N°

Sustituido por

Plano hauez dalleta erabilez herrida gure hafrenitz gabe

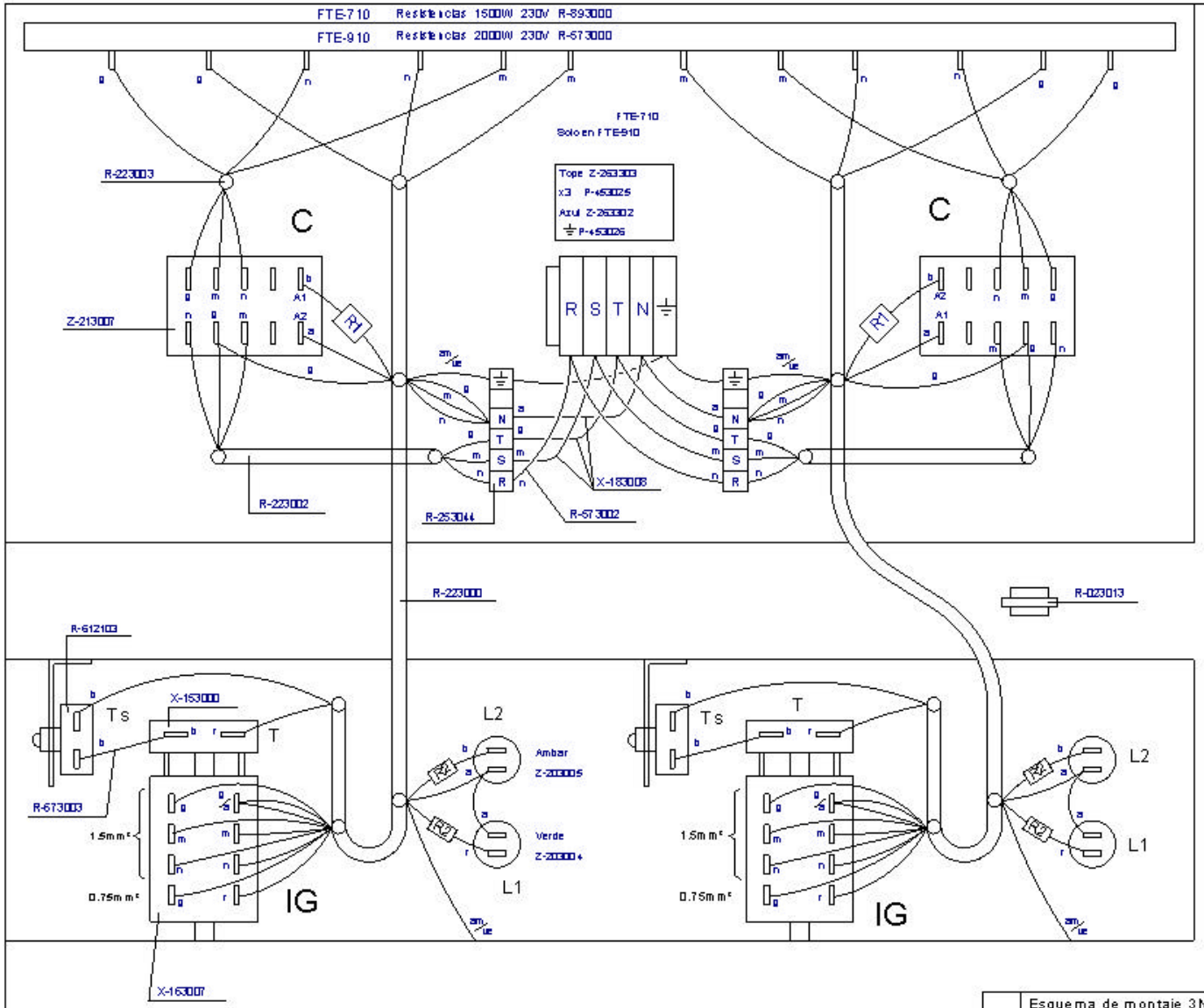

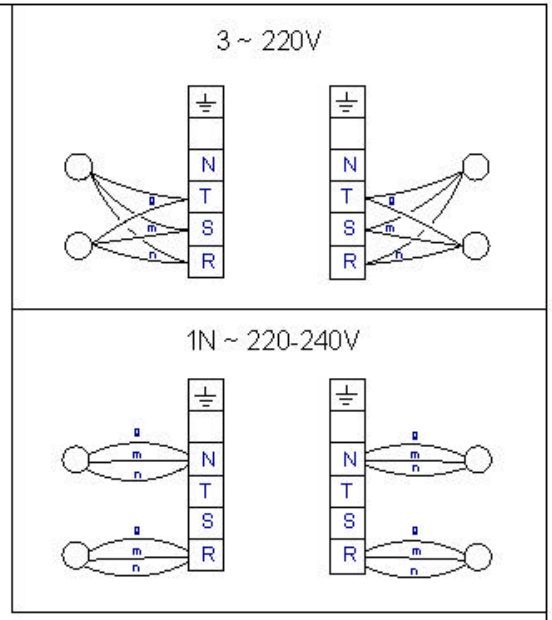

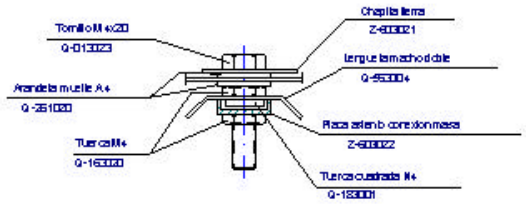

Esquema Adhesivo		
FTE-710	FTE-910	R-573001
FTE-705	FTE-905	R-563000

VERSION SIN NEUTRO

R2 U-803072 R-150KOhm 1/4W

R1 U-803073 R-8K2Ohm 6W

En IG, el cable azul (0,75mm 2) dejar suelto (Separado del cable Gris 1,5mm 2)

En C unir el cable azul con el marron en (R-223002)

	Esquema de montaje 3N ~ 380V			R-573005	
Nº	Pieza	Cant.	Material	Nº Clasificacion	Acabado
Nº	Modificacion		Propuesta de	Fecha	Tolerancias generales
1	Introducir G-700		Maillo	14/7/97	<5± 50–100± :
					5–25± : >100±
					25–50± : <X±

	Firma	Fecha
Dibujado	JON	95-9-25
Proyectado		
Comprobado		
Escala		

FAGOR

Fagor Industrial, Koop. Elk, Mugatua

Mecanizado superficial

FRY-TOP ELECTRICO

Plano numero HC-71229 -1

Sustituye al Nº

Sustituido por