Mod./Type: **_70/... PCG... - _90/... PCG...**

**EXTREME**

cod./num. 2531580.00

data/date: 05/06/2014

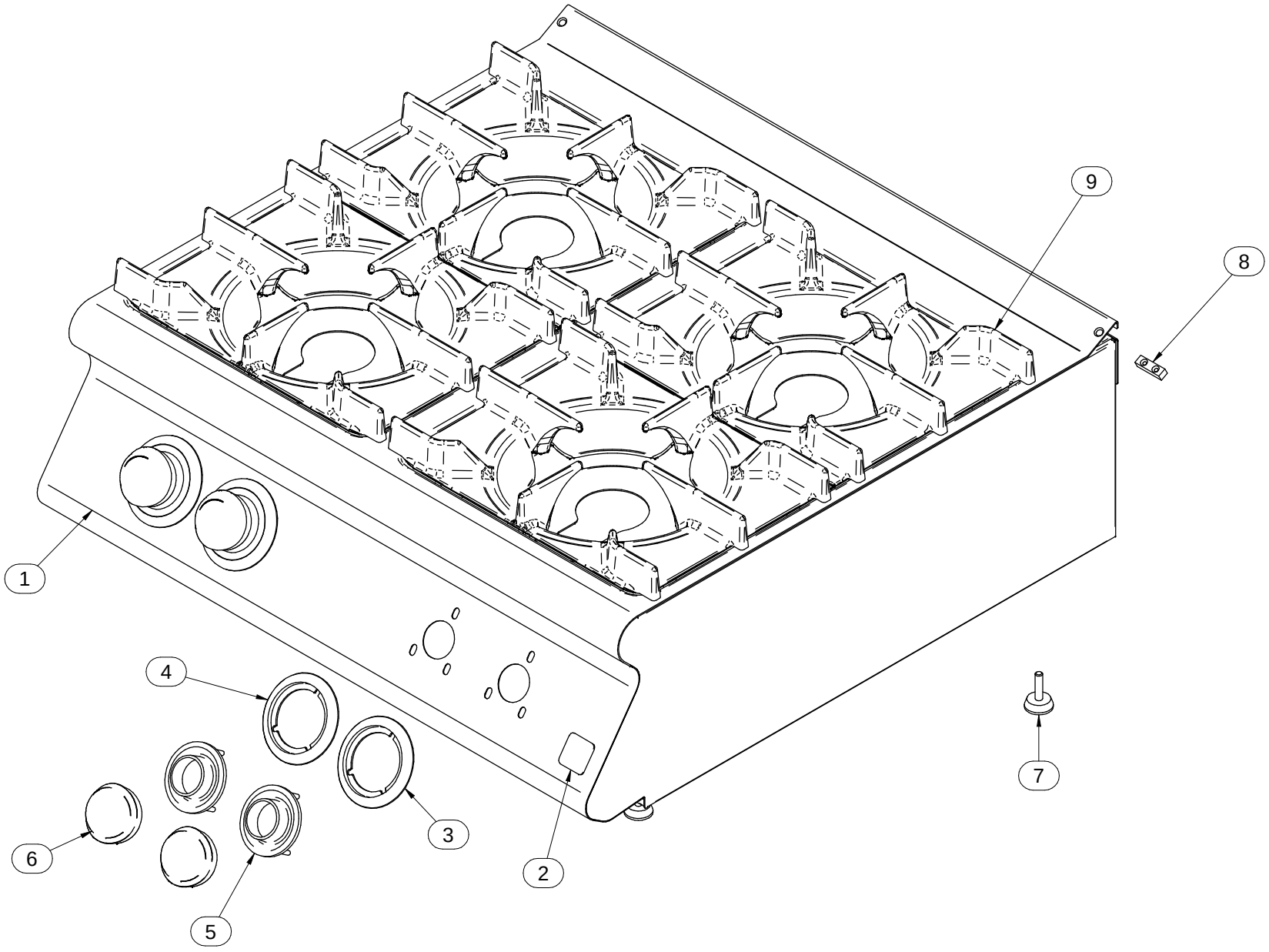

Mod./Type: **_70/... PCG - CFG - CFGE - CFGG - TP...G EXTREME**

**_90/... PCG - CFG - CFGE - CFGG - TP...G EXTREME**

cod./num. 2531582.00

data/date: 15/04/2014

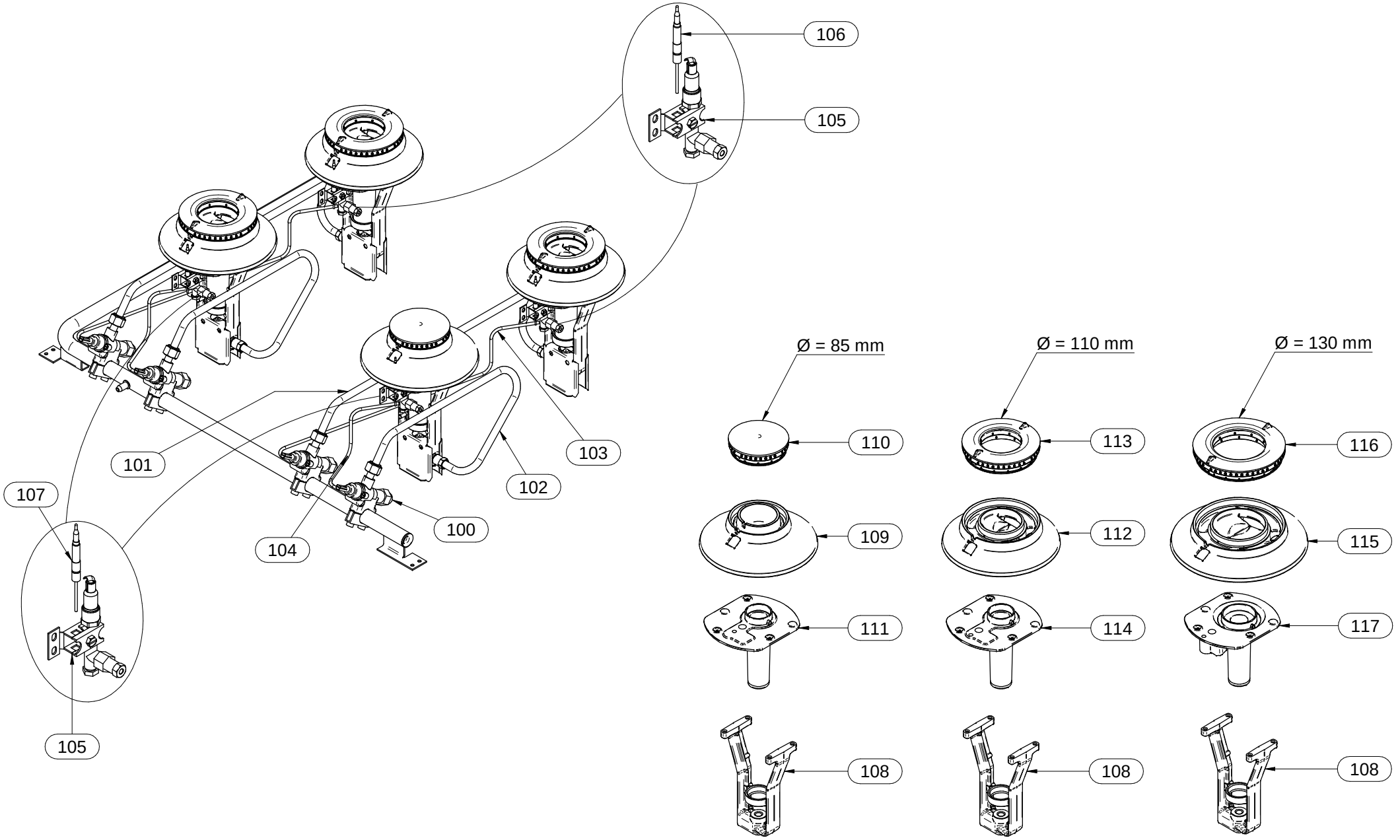

| Mod.: | _70/... PCG... - _90/… PCG… EXTREME | | | cod. / num. 2531581.00<br>data / date 06/06/2014<br>rif. / ref. 2531580.00 | | EM70/40 PCG… | EM70/80 PCG… | EM70/120 PCG… | EM90/40 PCG… | EM90/80 PCG… | EM90/120 PCG… | EM70/160 PCG… | NOTE | |
|---|---|---|---|---|---|---|---|---|---|---|---|---|---|---|
| POS. | DESCRIZIONE | DESCRIPTION | DENOMINATION | BENENNUNG | COD. | Q. ty | | | | | | | | |
| 1 | CRUSCOTTO | CONTROL PANEL | BANDEAU | BEDIENBLENDE | 9111234.00 | 1 | | | 1 | | | | | |
| | | | | | 9111235.00 | | 1 | | | 1 | | 2 | | |
| | | | | | 9111236.00 | | | 1 | | | 1 | | | |
| 2 | MARCHIO | BRAND NAME | MARQUE | MARKENZEICHEN | 982.021.00 | 1 | 1 | 1 | 1 | 1 | 1 | 2 | **FROM: 15.12.2011** | **TO: 31.01.2014** |
| | | | | | 982.023.00 | 1 | 1 | 1 | 1 | 1 | 1 | 2 | **FROM: 01.02.2014** | **TO:...** |
| 3 | SERIGRAFIA | SCREEN PRINT | SÉRIGRAPHIE | SIEBDRUCK | 910.163.00 | 1 | 2 | 3 | 2 | 3 | 2 | 4 | | |
| 4 | SERIGRAFIA | SCREEN PRINT | SÉRIGRAPHIE | SIEBDRUCK | 910.164.00 | 1 | 2 | 3 | 2 | 3 | 2 | 4 | | |
| 5 | LABIRINTO | LABYRINTH | LABYRINTHE | LABYRINTH | 256.235.00 | 2 | 4 | 6 | 4 | 6 | 4 | 8 | | |
| 6 | MANOPOLA | KNOB | BOUTON | DREHKNOPF | 256.217.00 | 2 | 4 | 6 | 4 | 6 | 4 | 8 | | |
| 7 | PIEDINO | FOOT | PIED | STELLFUSS | 951.050.00 | 4 | 4 | 4 | 4 | 4 | 4 | 6 | SOLO VERSIONE (-T) | ONLY (-T) VERSION |
| 8 | PIASTRINA GIUNZIONE | FIXING PLATE | PLAQUETTE FIXAGE | BEFESTIGUNGSPLATTE | 941.130.00 | 1 | 1 | 1 | 1 | 1 | 1 | 1 | | |
| 9 | GRIGLIA | GRID | GRILLE | ROST | 681.059.00 | 2 | 4 | 6 | | | | | | |
| | | | | | 981.071.00 | | | | 4 | 6 | 4 | 8 | | |
| 10 | | | | | | | | | | | | | | |
| 11 | | | | | | | | | | | | | | |
| 12 | | | | | | | | | | | | | | |
| 13 | | | | | | | | | | | | | | |
| 14 | | | | | | | | | | | | | | |
| 15 | | | | | | | | | | | | | | |
| 16 | | | | | | | | | | | | | | |
| 17 | | | | | | | | | | | | | | |
| 18 | | | | | | | | | | | | | | |
| 19 | | | | | | | | | | | | | | |
| 20 | | | | | | | | | | | | | | |
| 21 | | | | | | | | | | | | | | |
| 22 | | | | | | | | | | | | | | |
| 23 | | | | | | | | | | | | | | |
| 24 | | | | | | | | | | | | | | |
| 25 | | | | | | | | | | | | | | |
| 26 | | | | | | | | | | | | | | |
| 27 | | | | | | | | | | | | | | |
| 28 | | | | | | | | | | | | | | |
| 29 | | | | | | | | | | | | | | |
| 30 | | | | | | | | | | | | | | |
| 31 | | | | | | | | | | | | | | |
| 32 | | | | | | | | | | | | | | |
| 33 | | | | | | | | | | | | | | |
| 34 | | | | | | | | | | | | | | |

| Mod.: | _70/... PCG - CFG - CFGG - CFGE - TP...G<br>_90/... PCG - CFG - CFGG - CFGE - TP...G<br>EXTREME | | | cod. / num. 2531583.00<br>data / date 15/04/2014<br>rif. / ref. 2531582.00 | | _70/40 PCG... | _70/80 PCG... - ...CFG... | _70/120 PCG... - ...CFG... | _90/40 PCG... | _90/80 PCG... - ...CFG... | _90/120 PCG... - ...CFG... | _90/160 PCG... - ...CFG.... | _70/80 TPPCG... - ...TPPFG | _70/120 TPPCG2... - ...TPPCFG2 | _90/80 TPPCG..- ...TPPFG | _90/120 TPPCG2... - ...TPPCFG2 | NOTE |
|---|---|---|---|---|---|---|---|---|---|---|---|---|---|---|---|---|---|
| POS. | DESCRIZIONE | DESCRIPTION | DENOMINATION | BENENNUNG | COD. | Q. ty | | | | | | | | | | | |
| 100 | RUBINETTO GAS | GAS TAP | ROBINET GAZ | GASHAHN | 671.088.00 | 2 | 4 | 6 | 2 | 4 | 6 | 8 | 2 | 4 | 2 | 4 | |
| 101 | TUBO GAS | GAS PIPE | TUBE GAZ | GASROHR | 256.219.00 | 1 | 2 | 3 | | | | | 1 | 2 | | | |
| | | | | | 256.250.00 | | | | 1 | 2 | 3 | 4 | | | 1 | 2 | |
| 102 | TUBO GAS | GAS PIPE | TUBE GAZ | GASROHR | 256.220.00 | 1 | 2 | 3 | | | | | 1 | 2 | | | |
| | | | | | 256.251.00 | | | | 1 | 2 | 3 | 4 | | | 1 | 2 | |
| 103 | TUBO GAS | GAS PIPE | TUBE GAZ | GASROHR | 256.221.00 | 1 | 2 | 3 | | | | | 1 | 2 | | | |
| | | | | | 256.252.00 | | | | 1 | 2 | 3 | 4 | | | 1 | 2 | |
| 104 | TUBO GAS | GAS PIPE | TUBE GAZ | GASROHR | 256.222.00 | 1 | 2 | 3 | | | | | 1 | 2 | | | |
| | | | | | 256.253.00 | | | | 1 | 2 | 3 | 4 | | | 1 | 2 | |
| 105 | GRUPPO PILOTA | PILOT GROUP | GROUPE VEILLEUSE | ZÜNDBRENNER GRUPPE | 972.021.00 | 2 | 4 | 6 | 2 | 4 | 6 | 8 | 2 | 4 | 2 | 4 | |
| 106 | TERMOCOPPIA POSTERIORE | REAR THERMOCOUPLE | THERMOCOUPLE POSTERIEURE | HINTERES THERMOELEMENT | 672.099.00 | 1 | 2 | 3 | 1 | 2 | 3 | 4 | 1 | 2 | 1 | 2 | |
| 107 | TERMOCOPPIA ANTERIORE | FRONT THERMOCOUPLE | THERMOCOUPLE ANTERIEURE | VORDERES THERMOELEMENT | 672.025.00 | 1 | 2 | 3 | 1 | 2 | 3 | 4 | 1 | 2 | 1 | 2 | |
| 108 | PORTAUGELLO | NOZZLE HOLDER | PORTE-INJECTEUR | SPRITZDÜSE-TRÄGER | 982.020.00 | 2 | 4 | 6 | 2 | 4 | 6 | 8 | 2 | 4 | 2 | 4 | |
| 109 | BRUCIATORE 3,5kW | BURNER 3,5kW | BRULEUR 3,5kW | BRENNER 3,5kW | 972.018.00 | 1 | 1 | 1 | - | - | - | - | - | 1 | - | - | |
| 110 | SPARTIFIAMMA | FLAMESPREADER | CHAPEAU BRULEUR | FLAMMENTEILER | 972.022.00 | 1 | 1 | 1 | - | - | - | - | - | 1 | - | - | |
| 111 | SUPPORTO BRUCIATORE | SUPPORT FOR BURNER | SUPPORT BRÛLEUR | TRÄGER FÜR BRENNER | 982.017.00 | 1 | 1 | 1 | - | - | - | - | - | 1 | - | - | |
| 112 | BRUCIATORE 6kW | BURNER 6kW | BRULEUR 6kW | BRENNER 6kW | 972.019.00 | 1 | 3 | 5 | 1 | 1 | 2 | 2 | 2 | 3 | 1 | 1 | |
| 113 | SPARTIFIAMMA | FLAMESPREADER | CHAPEAU BRULEUR | FLAMMENTEILER | 972.023.00 | 1 | 3 | 5 | 1 | 1 | 2 | 2 | 2 | 3 | 1 | 1 | |
| 114 | SUPPORTO BRUCIATORE | SUPPORT FOR BURNER | SUPPORT BRÛLEUR | TRÄGER FÜR BRENNER | 982.018.00 | 1 | 3 | 5 | 1 | 1 | 2 | 2 | 2 | 3 | 1 | 1 | |
| 115 | BRUCIATORE 10kW | BURNER 10kW | BRULEUR 10kW | BRENNER 10kW | 972.020.00 | - | - | - | 1 | 3 | 4 | 6 | - | - | 1 | 3 | |
| 116 | SPARTIFIAMMA | FLAMESPREADER | CHAPEAU BRULEUR | FLAMMENTEILER | 972.024.00 | - | - | - | 1 | 3 | 4 | 6 | - | - | 1 | 3 | |
| 117 | SUPPORTO BRUCIATORE | SUPPORT FOR BURNER | SUPPORT BRÛLEUR | TRÄGER FÜR BRENNER | 982.011.00 | - | - | - | 1 | 3 | 4 | 6 | - | - | 1 | 3 | |
| 118 | | | | | | | | | | | | | | | | | |
| 119 | | | | | | | | | | | | | | | | | |
| 120 | | | | | | | | | | | | | | | | | |
| 121 | | | | | | | | | | | | | | | | | |
| 122 | | | | | | | | | | | | | | | | | |
| 123 | | | | | | | | | | | | | | | | | |
| 124 | | | | | | | | | | | | | | | | | |
| 125 | | | | | | | | | | | | | | | | | |
| 126 | | | | | | | | | | | | | | | | | |
| 127 | | | | | | | | | | | | | | | | | |
| 128 | | | | | | | | | | | | | | | | | |
| 129 | | | | | | | | | | | | | | | | | |
| 130 | | | | | | | | | | | | | | | | | |
| 131 | | | | | | | | | | | | | | | | | |
| 132 | | | | | | | | | | | | | | | | | |
| 133 | | | | | | | | | | | | | | | | | |
| 134 | | | | | | | | | | | | | | | | | |
| 135 | | | | | | | | | | | | | | | | | |
| 136 | | | | | | | | | | | | | | | | | |
| 137 | | | | | | | | | | | | | | | | | |
| 138 | | | | | | | | | | | | | | | | | |
| 139 | | | | | | | | | | | | | | | | | |
| 140 | | | | | | | | | | | | | | | | | |