SIMAG
ICE MACHINES

Ice Storage Bins

New Bins

R 100
R 130
R 150
R 190
R 250
R 300
R 400

Contenitori e Accessori
Bin and Accessories
Cabines et Accessoires
Speicher und Zubehöre

PAGE PAGINA PAGE SEITE	TABLE OF CONTENTS	INDICE	TABLE DES MATIÉRES	INHALTVERZEICHNIS
1	ACCESSORIES	ACCESSORI	ACCESSOIRES	ZUBEHÖRE
2/3	R 100 - STORAGE BIN	R 100 - CONTENITORE	R 100 - CABINES DE STOCKAGE	R 100 - SPEICHER
4/5	R 130 - STORAGE BIN	R 130 - CONTENITORE	R 130 - CABINE DE STOCKAGE	R 130 - SPEICHER
6/7	R 150 - STORAGE BIN	R 150 - CONTENITORE	R 150 - CABINE DE STOCKAGE	R 150 - SPEICHER
8/9	R 190 - STORAGE BIN	R 190 - CONTENITORE	R 190 - CABINE DE STOCKAGE	R 190 - SPEICHER
10/11	R 250 - STORAGE BIN	R 250 - CONTENITORE	R 250 - CABINE DE STOCKAGE	R 250 - SPEICHER
12/13	R 300 - STORAGE BIN	R 330 - CONTENITORE	R 300 - CABINE DE STOCKAGE	R 300 - SPEICHER
14/15	R 400 - STORAGE BIN	R 400 - CONTENITORE	R 400 - CABINE DE STOCKAGE	R 400 - SPEICHER

ACCESSORIES - ACCESSORI - ACCESSOIRES - ZUBEHÖRE

PART NO CODICE REFERENCE STUECK NR	DESCRIPTION	DESCRIZIONE	DESIGNATION	BESCHREIBUNG
650071 00 650146 00 02000540 01	ICE SCOOP - SMALL ICE SCOOP - MEDIUM ICE SCOOP - LARGE	PALETTA - PICCOLA PALETTA - MEDIA PALETTA - GRANDE	PELLE - PETITE PELLE - MOYENNE PELLE - GRANDE	SCHAUFEL - KLEIN SCHAUFEL - MITTELGROSS SCHAUFEL - GROSSE
001140 04 001140 01 001140 02	WATER FILTER BODY COTTON CARTRIDGE CARBON CARTRIDGE	CONTENITORE FILTRO A CARTUCCIA CARTUCCIA DI COTONE CARTUCCIA A CARBONI	FILTRE À EAU CARTOUCHE DE COTON CARTOUCHE À CHARBON	FILTER BAUMWOLLE - EINSATZ KOHLE EINSATZ
001009 00 001009 01 001009 02	ICE MACHINE CLEANER - 1/2 LTR ICE MACHINE CLEANER - 1 LTR ICE MACHINE CLEANER - 5 LTR	DISINCROSTANTE - 1/2 L DISINCROSTANTE - 1 L DISINCROSTANTE - 5 L	DÉTARTRANT - 1/2 LTR DÉTARTRANT - 1 LTR DÉTARTRANT - 5 LTR	ENTKALKER - 1/2 LT ENTKALKER - 1 LT ENTKALKER - 5 LT
264000 02	ANTIALGAE CLEANER	LIQUIDO BATTERICIDA	LIQUIDE ANTIALGUES	ANTIALGEN FLÜSSIGKEIT
060294 01 263612 00	GEAR CASE GREASE - 1 KG FOOD GRADE LUBRICANT	GRASSO PER RIDUTTORI GRASSO PER CUSCINETTI	GRAISSE POUR REDUCTEURS GRAISSE POUR ROULEMENTS	FETT FUER GETRIEBE FETT FUER LAGER
001023 00	PRESSOSTAT ADJUST.KEY	CHIAVE REGOLAZ. PRESSOSTATO	CLEF DU REGL. PRESSOSTAT	SCHLÜSSEL FÜR PRESSOSTATEWSTELLUNG
060513 00	3/4 GAS WATER IN. TUBE	TUBO DI CARICO ACQUA 3/4 GAS	TUYAU ARRIVÉE EAU 3:4 GAS	WASSEREINLAUFROHR - 3/4 GAS
640076 13	RUBBER GASKET (3/4")	GUARNIZIONE (3/4")	JOINT (3/4")	DICHTUNG (3/4")
060513 01	WATER DRAIN TUBE	TUBO SCARICO ACQUA	TUYAU EVACUATION EAU	WASSERABFLUSSROHR

R 100

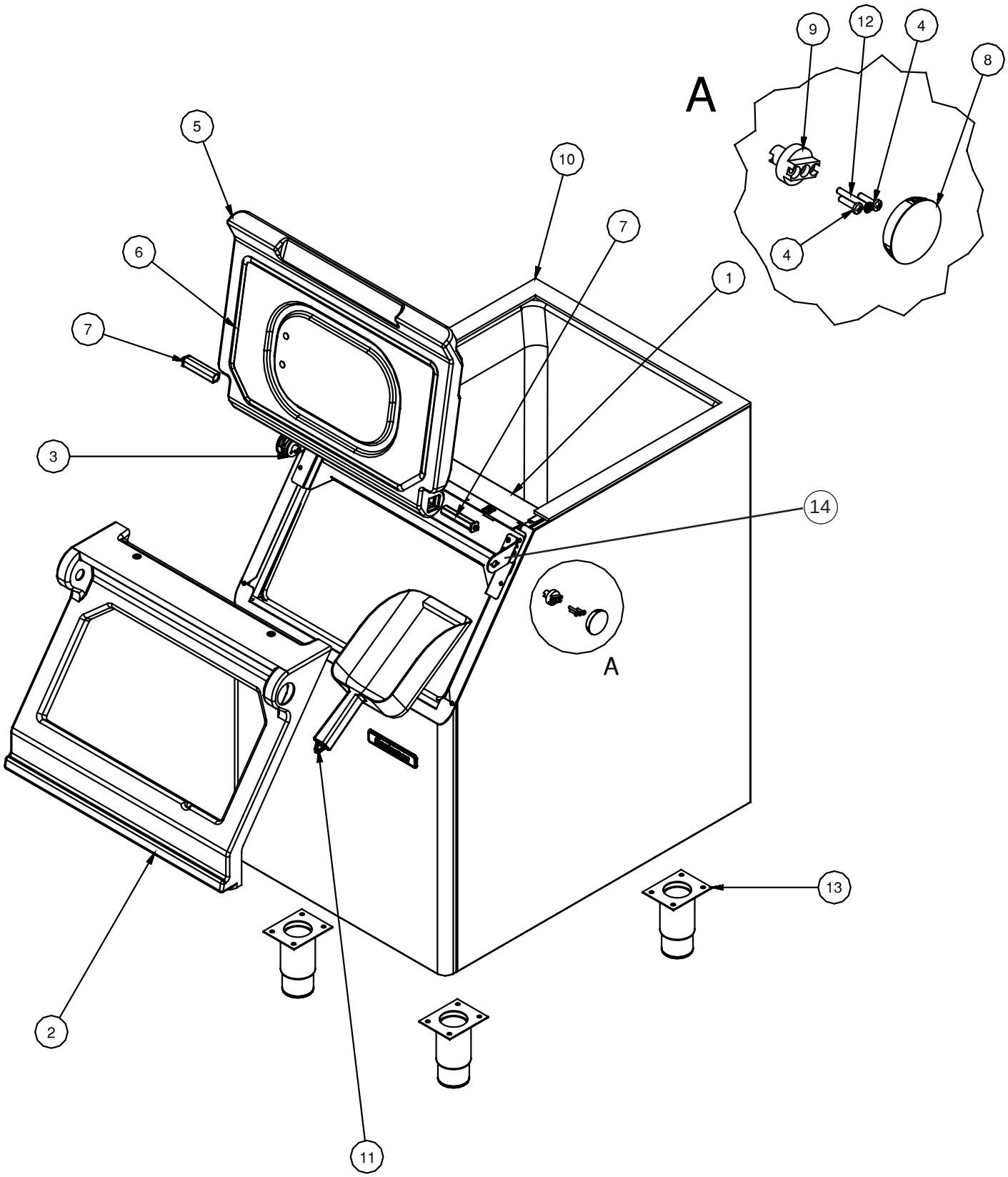

PROPERTY

R 100

ITEM NO POS. NO REP. NO REF. NO	PART NO CODICE REFERENCE STUECK NR	DESCRIPTION	DESCRIZIONE	DESIGNATION	BESCHREIBUNG
1	CM 81460565	UPPER METAL BRACKET	TELAIO SPORTELLO	SUPPORT TOLE INOX	VORDERER METALLHALTEWINKEL
2	CM 25702957	BIN DOOR FRAME	CORNICE SPORTELLO	ENCADREMENT PORTE CABINE	SORTIERFACH-TÜRRAHMEN
3	CM 25702894	HINGE BRKT, LEFT	SUPPORTO CERNIERA SX	SUPPORT CHERNIERE GAUCHE	SCHARNIER-HALTEWINKEL, LINKS
4	CM 12726408	SCREW	VITE	VIS	SCHRAUBE
5	CM 25702952	BIN DOOR	SPORTELLO	PORTE CABINE	TÜR
6	CM 25702910	BIN DOOR GASKET	GUARNIZIONE PORTA	GARNITURE PORTE CABINE	DICTUNG
7	CM 25702856	HINGE	CERNIERA	CHERNIERE	SCHARNIER
8	CM 19690418	PLUG	TAPPO	BOUCHON	STECKER
9	CM 25702875	HINGE HOLDER	BOCCOLA BLOCCAGGIO CERNIERA	BAGUE	BUCHSE
10	CM 81460377	GASKET	GUARNIZIONE	JOINT	DICHTUNG
11	CM 19500101	SCOOP	PALETTA	SCOOP	SCOOP
12	CM 12901904	SCREW	VITE	VIS	SCHRAUBE
13	CM 81502140	LEG+SOCKET	MANICOTTO PIEDINO	MANCHON A' VIS	VERBINDUNGSMUFFE DER FÜSSE
14	CM 25702893	HINGE BRKT, RIGHT	SUPPORTO CERNIERA DX	SUPPORT CHERNIERE DROITE	SCHARNIER-HALTEWINKEL, RECHTE

R 130

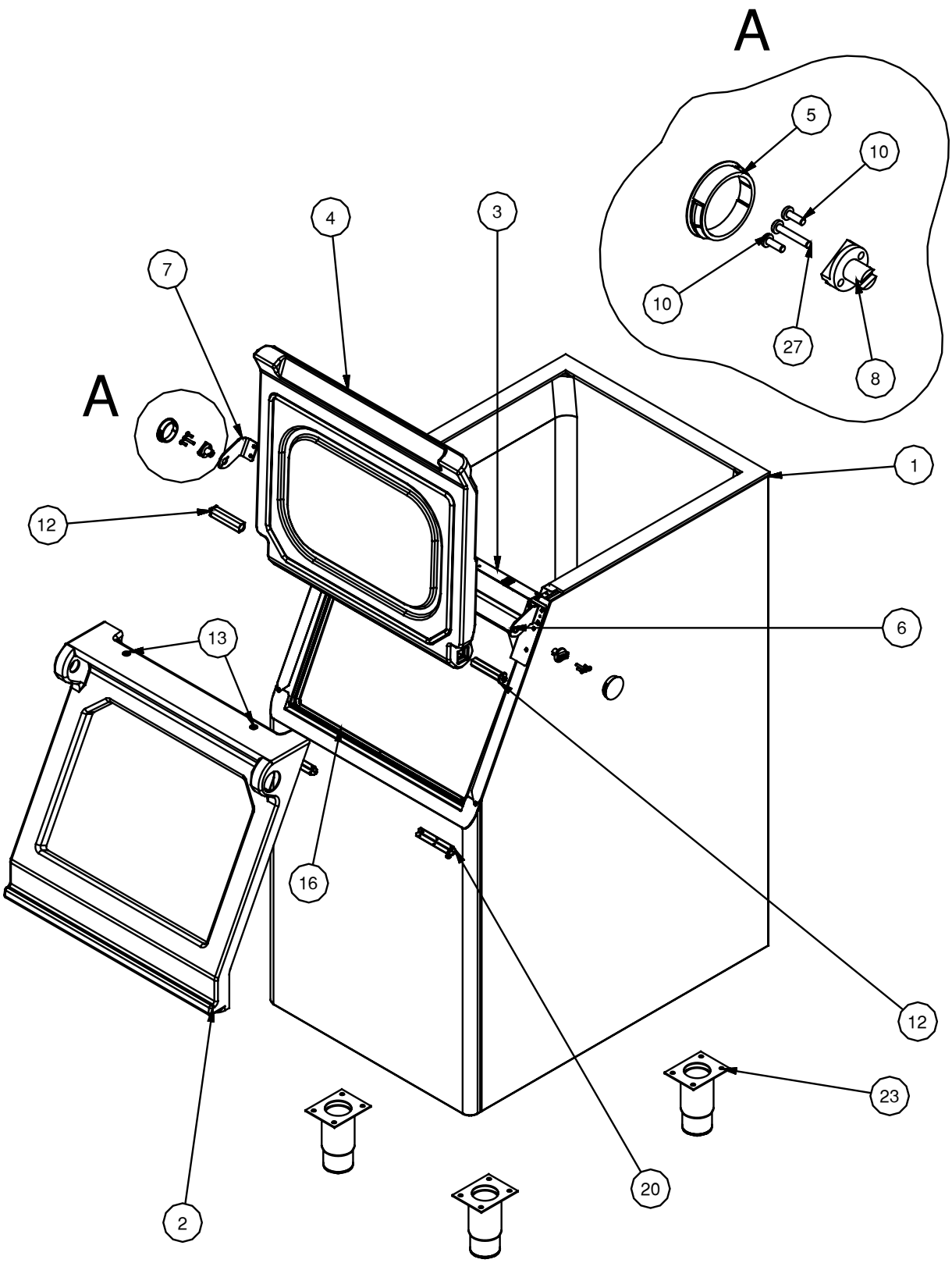

PROPERTY

R 130

ITEM NO POS. NO REP. NO REF. NO	PART NO CODICE REFERENCE STUECK NR	DESCRIPTION	DESCRIZIONE	DESIGNATION	BESCHREIBUNG
2	CM 25702974	PLASTIC BIN DOOR FRAME	CORNICE SPORTELLO	ENCADREMENT PORTE CABINE	SORTIERFACH-TÜRRAHMEN
3	CM 81460562	UPPER METAL BRACKET	TELAIO SPORTELLO/SCIVOLO	SUPPORT TOLE INOX/DEFLECTEUR	VORDERER METALLHALTEWINKEL
4	CM 25702980	BIN DOOR	SPORTELLO	PORTE CABINE	TÜR
5	CM 19690418	PLUG	TAPPO	BOUCHON	STECKER
6	CM 25702944	BIN DOOR RIGHT HUNGE BRKT	SUPPORTO CERNIERE DX	SUPPORT CHERNIERE DROITE	SCHARNIER-HALTEWINKEL, RECHTE
7	CM 25702945	BIN DOOR LEFT HINGE BRKT	SUPPORTO CERNIERE SX	SUPPORT CHERNIERE GAUCHE	SCHARNIER-HALTEWINKEL, LINKS
8	CM 25702875	HINGE HOLDER	BOCCOLA BLOCCAGGIO CERNIERA	BAGUE	BUCHSE
10	CM 12768410	SCREW	VITE	VIS	SCHRAUBE
12	CM 25702856	HINGE	CERNIERA	CHERNIERE	SCHARNIER
13	CM 12776601	SCREW M4X10	VITE M4X10	VIS M4X10	SCHRAUBE M4X10
16	CM 25702962	GASKET	GUARNIZIONE	GARNITURE	DICHTUNG
20	CM 25702855	BIN DOOR FRAME HOLDER	SUPPORTO CORNICE SPORTELLO	SUPPORT ENCAD. PORTE CABINE	BIN TÜR RAHMENHALTER
23	CM 81502140	LEG+SOCKET	MANICOTTO PIEDINO	MANCHON À VIS	VERBINDUNGSMUFFE DER FÜSSE
27	CM 12727200	SCREW M4X25	VITE M4X25	VIS M4X25	SCHRAUBE M4X25

R 150

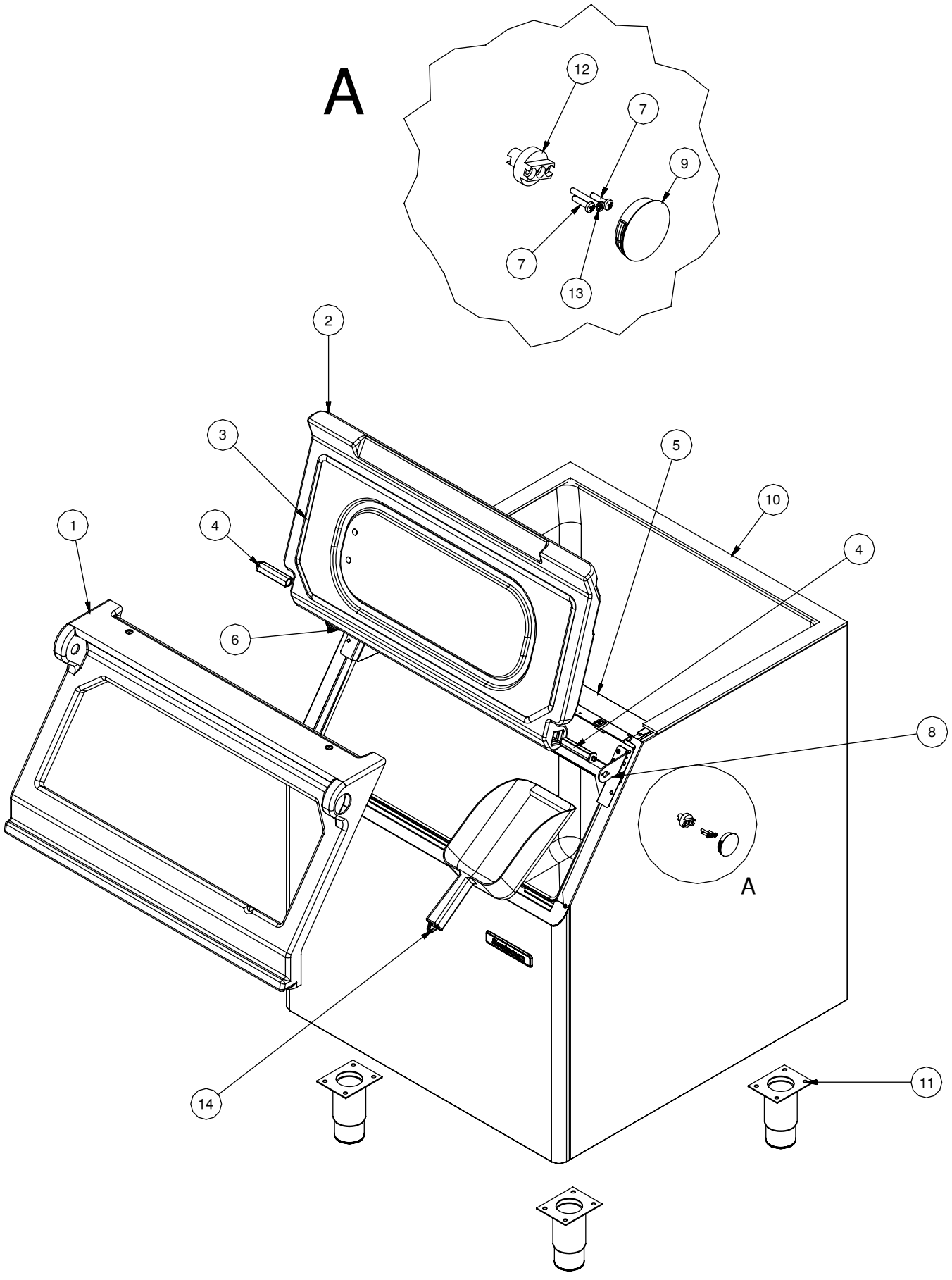

PROPERTY

R 150

ITEM NO POS. NO REP. NO REF. NO	PART NO CODICE REFERENCE STUECK NR	DESCRIPTION	DESCRIZIONE	DESIGNATION	BESCHREIBUNG
1	CM 25702958	BIN DOOR FRAME	CORNICE SPORTELLO	ENCADREMENT PORTE CABINE	SORTIERFACH-TÜRRAHMEN
2	CM 25702953	BIN DOOR	SPORTELLO	PORTE CABINE	TÜR
3	CM 25702907	BIN DOOR GASKET	GUARNIZIONE PORTA	GARNITURE PORTE CABINE	DICTUNG
4	CM 25702856	HINGE	CERNIERA	CERNIERE	SCHARNIER
5	CM 81460552	UPPER METAL BRACKET & DEFLEC.	TELAIO SPORTELLO/SCIVOLO	SUPPORT TOLE INOX/DEFLECTEUR	VORDERER METALLHALTEWINKEL
6	CM 25702894	HINGE BRKT, LEFT	SUPPORTO CERNIERA SX	SUPPORT CHERNIERE GAUCHE	SCHARNIER-HALTEWINKEL, LINKS
7	CM 12726408	SCREW	VITE	VIS	SCHRAUBE
8	CM 25702893	HINGE BRKT, RIGHT	SUPPORTO CERNIERA DX	SUPPORT CHERNIERE DROITE	SCHARNIER-HALTEWINKEL, RECHTE
9	CM 19690418	PLUG	TAPPO	BOUCHON	STECKER
10	CM 19550104	GASKET	GUARNIZIONE	JOINT	DICHTUNG
11	CM 81502140	LEG+SOCKET	MANICOTTO PIEDINO	MANCHON À VIS	VERBINDUNGSMUFFE DER FÜSSE
12	CM 25702875	HINGE HOLDER	BOCCOLA BLOCCAGGIO CERNIERA	BAGUE	BUCHSE
13	CM 12901904	SCREW	VITE	VIS	SCHRAUBE
14	02000540 01	SCOOP	PALETTA	SCOOP	SCOOP

R 190

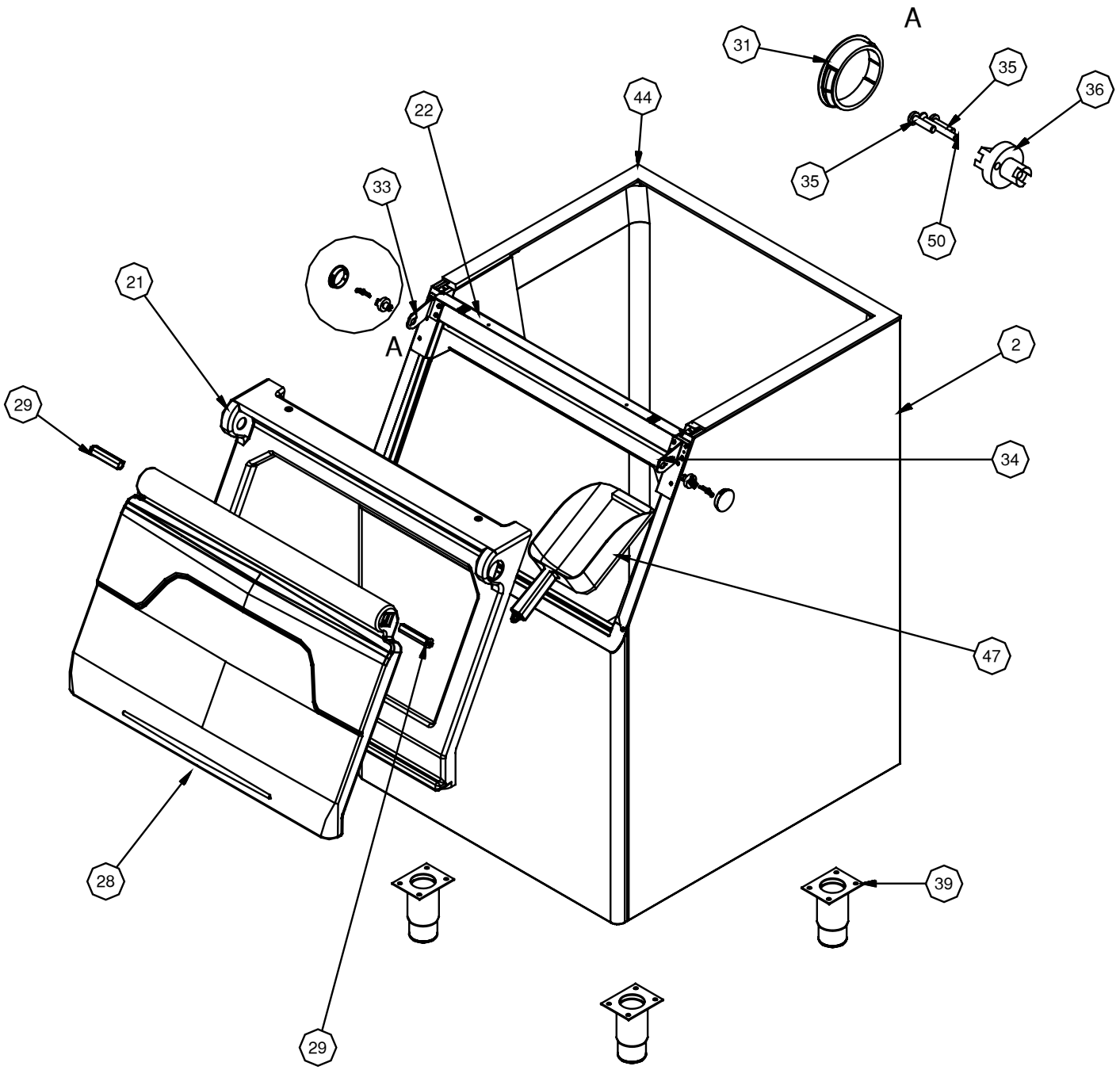

PROPERTY

R 190

ITEM NO POS. NO REP. NO REF. NO	PART NO CODICE REFERENCE STUECK NR	DESCRIPTION	DESCRIZIONE	DESIGNATION	BESCHREIBUNG
21	CM 25702986	PLASTIC BIN DOOR FRAME	CORNICE SPORTELLO	ENCADREMENT PORTE CABINE	SORTIERFACH-TÜRRAHMEN
22	CM 81460559	UPPER METAL BRACKET	TELAIO SPORTELLO/SCIVOLO	SUPPORT TOLE INOX/DEFLECTEUR	VORDERER METALLHALTEWINKEL
28	CM 25702981	BIN DOOR	SPORTELLO	PORTE CABINE	TÜR
29	CM 25702856	HINGE	CERNIERA	CERNIERE	SCHARNIER
31	CM 19690418	PLUG	TAPPO	BOUCHON	STECKER
33	CM 25702945	BIN DOOR LEFT HINGE BRKT	SUPPORTO CERNIERE SX	SUPPORT CHERNIERE GAUCHE	SCHARNIER-HALTEWINKEL, LINKS
34	CM 25702944	BIN DOOR RIGHT HUNGE BRKT	SUPPORTO CERNIERE DX	SUPPORT CHERNIERE DROITE	SCHARNIER-HALTEWINKEL, RECHTE
35	CM 12726408	SCREW	VITE	VIS	SCHRAUBE
36	CM 25702875	HINGE HOLDER	BOCCOLA BLOCCAGGIO CERNIERA	BAGUE	BUCHSE
39	CM 81502140	LEG+SOCKET	MANICOTTO PIEDINO	MANCHON À VIS	VERBINDUNGSMUFFE DER FÜSSE
44	CM 25702943	GASKET	GUARNIZIONE	JOINT	DICHTUNG
47	CM 19500101	SCOOP	PALETTA	SCOOP	SCOOP
50	CM 12901904	SCREW	VITE	VIS	SCHRAUBE

R 250

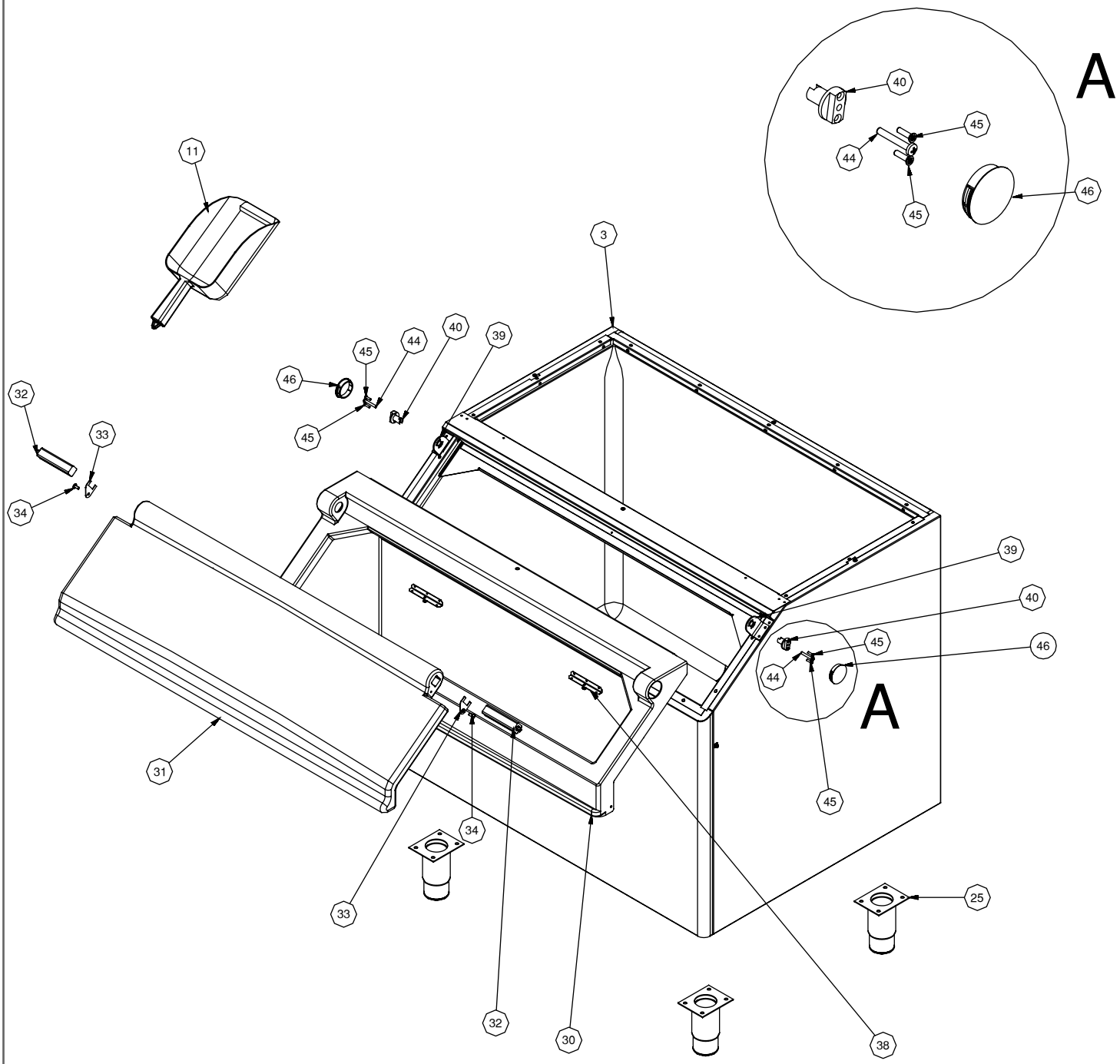

PROPERTY

R 250

ITEM NO POS. NO REP. NO REF. NO	PART NO CODICE REFERENCE STUECK NR	DESCRIPTION	DESCRIZIONE	DESIGNATION	BESCHREIBUNG
11	02000540 01	SCOOP	PALETTA	SCOOP	SCOOP
25	CM 81502140	LEG+SOCKET	MANICOTTO PIEDINO	MANCHON À VIS	VERBINDUNGSMUFFE DER FÜSSE
30	CM 25702987	BIN DOOR FRAME	CORNICE SPORTELLO	ENCADREMENT PORTE CABINE	SORTIERFACH-TÜRRAHMEN
31	CM 25702982	BIN DOOR ASSY	ASS. SPORTELLO	ENS. PORTE CABINE	TÜR
32	CM 25702938	HINGE	CERNIERA	CERNIERE	SCHARNIER
33	CM 25702939	HINGE HOLDER	BLOCCO CERNIERA	BLOCKAGE CERNIERE	SCHARNIER-HALTER
34	CM 12776611	SCREW M5X12 MM	VITE M5X12 MM	VIS M5X12 MM	SCHRAUBE M5X12 MM
38	CM 25702855	BIN DOOR FRAME HOLDER	SUPPORTO CORNICE SPORTELLO	SUPPORT ENCAD. PORTE CABINE	BIN TÜR RAHMENHALTER
39	CM 25702960	HINGE BRACKET	SUPPORTO CERNIERE	SUPPORT CHERNIERE	SCHARNIER-HALTEWINKEL
40	CM 25702959	HINGE HOLDER	BOCCOLA BLOCCAGGIO CERNIERA	BAGUE	BUCHSE
44	CM 12727785	SCREW M5X35 MM	VITE M5X35 MM	VIS M5X35 MM	SCHRAUBE M5X35 MM
45	CM 12901903	SCREW	VITE	VIS	SCHRAUBE
46	CM 19690418	PLUG	TAPPO	BOUCHON	STECKER

R 300

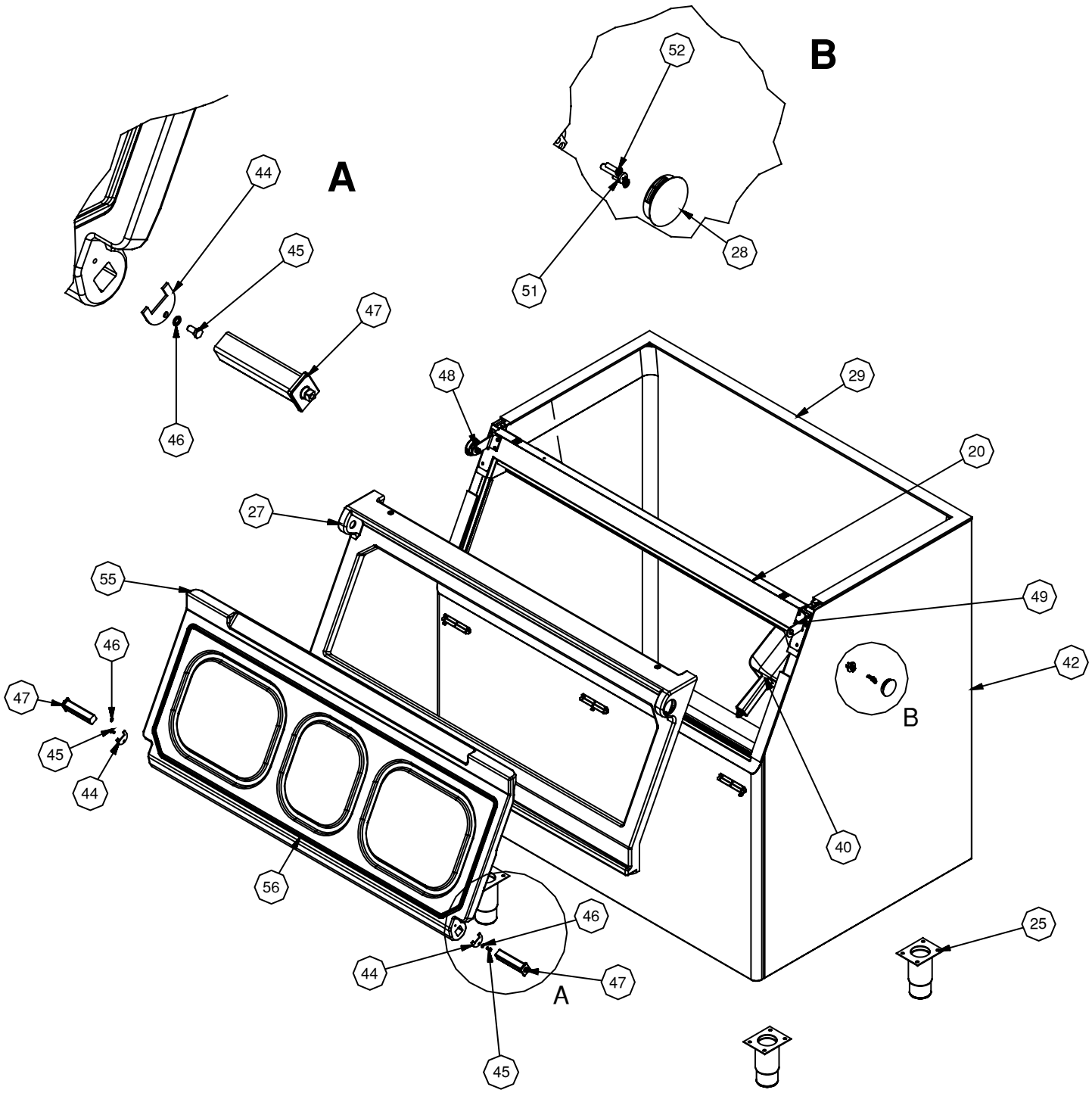

PROPERTY

R 300

ITEM NO POS. NO REP. NO REF. NO	PART NO CODICE REFERENCE STUECK NR	DESCRIPTION	DESCRIZIONE	DESIGNATION	BESCHREIBUNG
20	CM 81460555	S.S. UPPER BIN DOOR FRAME	ASS. SUPPORTO FRONTALE	ENS. SUPPORT ACIER INOX	VORDERER METALLHALTEWINKEL
25	CM 81502140	LEG+SOCKET	MANICOTTO PIEDINO	MANCHON À VIS	VERBINDUNGSMUFFE DER FÜSSE
27	CM 25702988	BIN DOOR FRAME	CORNICE SPORTELLO	ENCADREMENT PORTE CABINE	SORTIERFACH-TÜRRAHMEN
28	CM 19690418	PLUG	TAPPO	BOUCHON	STECKER
29	CM 25702879	GASKET	GUARNIZIONE	GARNITURE	DICTUNG
40	02000540 01	SCOOP	PALETTA	SCOOP	SCOOP
44	CM 25702939	HINGE HOLDER	BLOCCO CERNIERA	BLOCKAGE CERNIERE	SCHARNIER-HALTER
45	CM 12788801	SCREW	VITE	VIS	SCHRAUBE
46	CM 12581502	LOCKWASHER	RONDELLA SPACCATA	RONDELLE	FEDERRING
47	CM 25702938	HINGE	CERNIERA	CERNIERE	SCHARNIER
48	CM 25702942	HINGE HOLDER LEFT	SUPPORTO SX	SUPPORT CERNIERE GAUCHE	HALTEWINKEL
49	CM 25702941	HINGE HOLDER RIGHT	SUPPORTO DX	SUPPORT CERNIERE DROITE	HALTEWINKEL
51	CM 12727748	SCREW	VITE	VIS	SCHRAUBE
52	CM 12901903	SCREW	VITE	VIS	SCHRAUBE
55	CM 25702983	BIN DOOR ASSY	ASS. SPORTELLO	ENS. PORTE CABINE	TÜR
56	CM 19550126	GASKET	GUARNIZIONE	GARNITURE	DICHTUNG

R 400

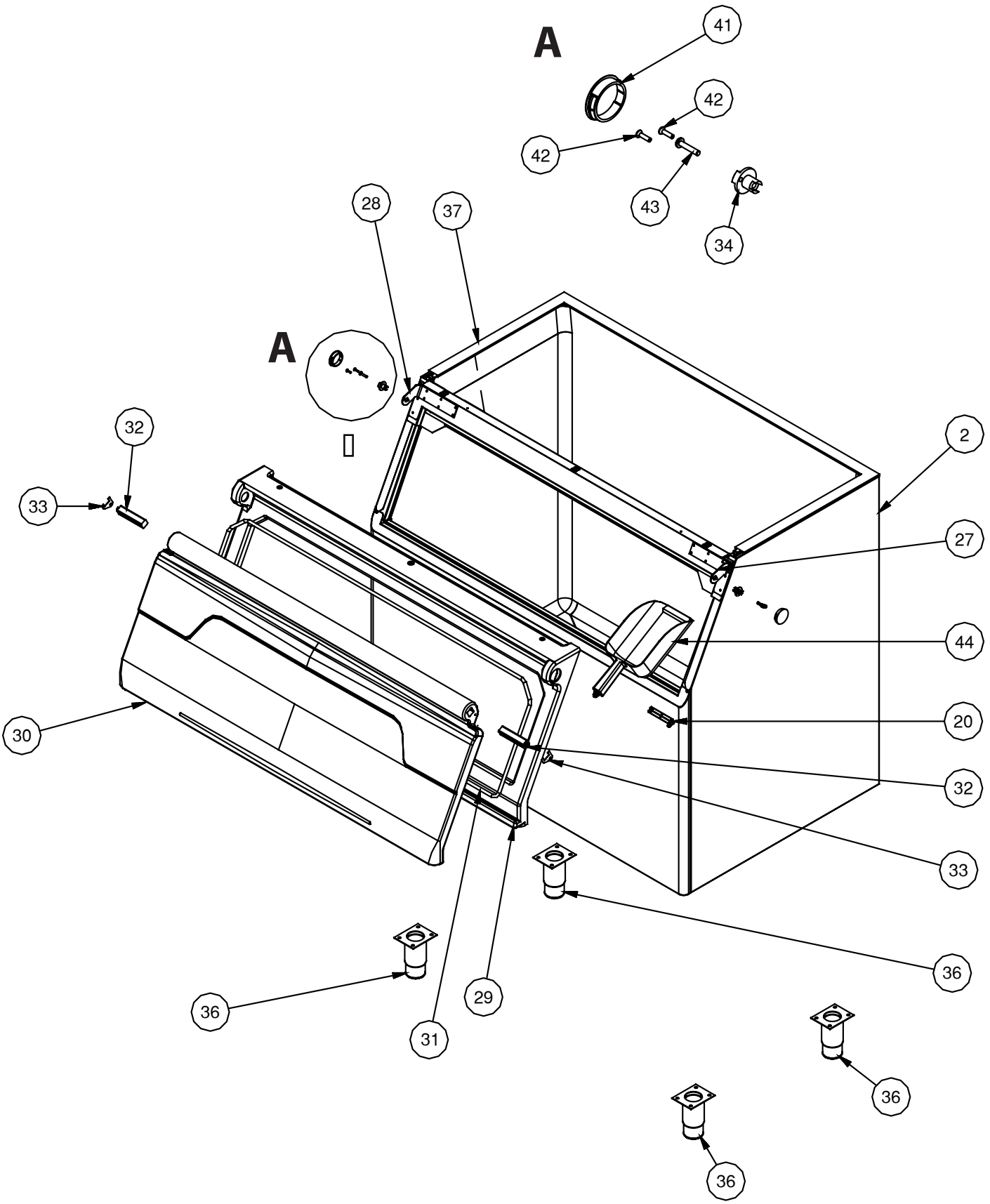

PROPERTY

R 400

ITEM NO POS. NO REP. NO REF. NO	PART NO CODICE REFERENCE STUECK NR	DESCRIPTION	DESCRIZIONE	DESIGNATION	BESCHREIBUNG
20	CM 25702855	BIN DOOR FRAME HOLDER	SUPPORTO CORNICE SPORTELLO	SUPPORT ENCADR. PORTE CABINE	BIN TÜR RAHMENHALTER
27	CM 25702941	HINGE HOLDER RIGHT	SUPPORTO DX	SUPPORT CERNIERE DROITE	HALTEWINKEL
28	CM 25702942	HINGE HOLDER LEFT	SUPPORTO SX	SUPPORT CERNIERE GAUCHE	HALTEWINKEL
29	CM 25702984	PLASTIC BIN DOOR FRAME	CORNICE SPORTELLO	ENCADREMENT PORTE CABINE	SORTIERFACH-TÜRRAHMEN
30	CM 25702989	BIN DOOR	SPORTELLO	PORTE CABINE	TÜR
31	CM 25702924	GASKET	GUARNIZIONE	GARNITURE	DICHTUNG
32	CM 25702938	HINGE	CERNIERA	CERNIERE	SCHARNIER
33	CM 25702939	HINGE HOLDER	BLOCCO CERNIERA	BLOCKAGE CERNIERE	SCHARNIER-HALTER
34	CM 25702940	HINGE HOLDER	BOCCOLA BLOCCAGGIO CERNIERA	BAGUE	BUCHSE
36	CM 81502140	LEG+SOCKET	MANICOTTO PIEDINO	MANCHON À VIS	VERBINDUNGSMUFFE DER FÜSSE
41	CM 19690418	PLUG	TAPPO	BOUCHON	STECKER
42	CM 12901903	SCREW	VITE	VIS	SCHRAUBE
43	CM 12727748	SCREW	VITE	VIS	SCHRAUBE
44	02000540 01	SCOOP	PALETTA	SCOOP	SCOOP

New Bins

SIMAG
ICE MACHINES