DESPIECE TECNICO

Cocinas centrales
Gas central ranges
Fourneaux traversants
Zentral-herde
Cucine centrale
Fogões centrais

GAMA 1000

Modelos:

CG-1002

Julio 2010 July

Revisado Julio 2013 July Revised

FAGOR

FAGOR INDUSTRIAL

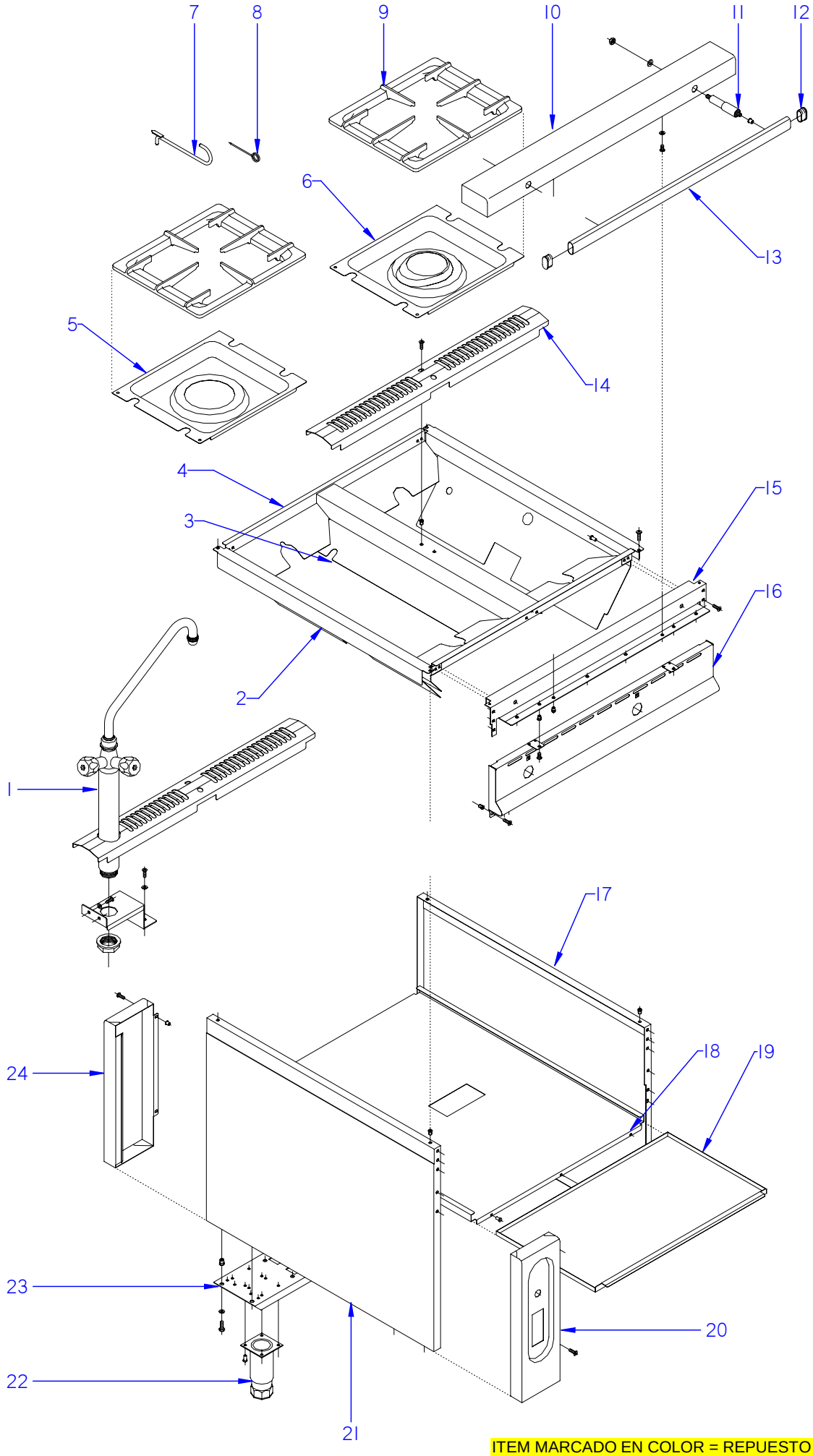

ITEM MARCADO EN COLOR = REPUESTO RECOMENDADO
COLOURED ITEM = RECOMMENDED SPARE PART

N plano	Firma	Fecha	Aparato	MUEBLE / FITTING	Lamina	
C-2688		2010-07	COCINAS / RANGES CG-1002		1	Fagor Industrial S.Coop. FAGOR Oñate

MOD.	COCINAS / RANGES	ZONA / ZONE	MUEBLE / FITTING	PLANO DIAGRAM	C-2688

ITEM	CODIGO CODE	DENOMINACION	NAME	CG-1002							NOTAS
1	**1100002785**	**KIT GRIFO DE AGUA**	**TAP WATER KIT**	**1**							
2	U865404000	LATERAL DE MESA	SIDE TABLE	2							
	Q152004000	TORNIL, APLASTADO M5x13 A304	FLAT HEADED BOLT M5x13 A304	4							
	Q221342000	REMACHE EXAGONAL M5	HEXAGONAL RIVET M5	4							
3	U865406000	CENTRAL MESA	CENTRAL TABLE	1							
	Q221342000	REMACHE EXAGONAL M5	HEXAGONAL RIVET M5	2							
4	U865405000	INTERIOR DE MESA	BENCH SIDE	2							
	Q412000000	REMACHE TUBULAR Ø4 x 8	TUBULAR RIVET Ø4 x 8	6							
5	U025405000	VERTEDERO 8000	DISCHARGE 8000	2							
6	U025404000	VERTEDERO 4000	DISCHARGE 4000	2							
7	623600000	PALANCA LEVANTAPLACAS	LIFTING LEVER PLATES	1							
8	623500000	AGUJA LIMPIEZA	NEEDLE CLEANING	1							
9	U035409000	PARRILLA G900	GRILLE G900	4							
10	U865407000	ANTERIOR MESA	BENCH FRONT	2							
	Q152004000	TORNIL, APLASTADO M5x13 A304	FLAT HEADED BOLT M5x13 A304	4							
11	U705410000	AMARRE DISTANCIADOR PASAM.	TIE RAIL SPACER	4							
	Q161360000	TUERCA EXAGONAL M10 H.ZINCA.	H. ZINC M10 HEX NUT	4							
	Q232060000	ARANDELA A10	WASHER A10	4							
12	U702831000	TAPON DE PASAMANOS	CAP HANDRAILS	4							
	Q411308000	REMACHE TUBTARA M10	TUBTARA RIVET M10	4							
13	U862803000	PASAMANOS	HANDRAILS	2							
14	U865400000	EMBELLECEDOR CHIMENEA	FLUE TRIM	1							ELIMINADO 12.10.11
14	U865400000S	EMBELLECEDOR CHIMENEA ESM.	GLAZED FLUE TRIM	1							INTRODUCIDO 12.10.11
	Q032035000	TORNILLO ALOMADO M5X30	ALOHA SCREW M5X30	2							
15	R162613000	ESCUADRA AMARRE ANTER. MESA	PREVIOUS TIE SQUARE TABLE	2							
	Q152004000	TORNIL, APLASTADO M5x13 A304	FLAT HEADED BOLT M5x13 A304	12							
16	U862800000	PANEL PORTAMANDOS	CONTROL HOLDER PANEL	2							
	Q152004000	TORNIL, APLASTADO M5x13 A304	FLAT HEADED BOLT M5x13 A304	4							
17	U862802000	PANEL LATERAL DERECHO	RIGHT SIDE PANEL	1							
	Q221342000	REMACHE EXAGONAL M5	HEXAGONAL RIVET M5	10							

MOD.	COCINAS / RANGES	ZONA / ZONE	MUEBLE / FITTING	PLANO DIAGRAM	C-2688

ITEM	CODIGO CODE	DENOMINACION	NAME	CG-1002							NOTAS
18	U862601000	BASE BANDEJAS	TRAY BASE	1							
	Q419005000	REMACHE 4X8 ALMG3 / ALUMINIO	RIVET 4X8 ALMG3 / ALUMINIUM	6							
19	U852605000	BANDEJA RECOGE GRASAS	GREASE COLLECTION TRAY	2							ELIMINADO 17.09.2012
19	12038808	BANDEJA RECOGE GRASAS	GREASE COLLECTION TRAY	2							INTRODUCIDO 17.09.2012
	Q419005000	REMACHE 4X8 ALMG3 / ALUMINIO	RIVET 4X8 ALMG3 / ALUMINIUM	8							
	Q221343000	REMACHE EXAGONAL M6	HEXAGONAL RIVET M6	4							
	Q221342000	REMACHE EXAGONAL M5	HEXAGONAL RIVET M5	2							
20	U022808000	PORTAMANDOS LATERAL	SIDE CONTROL HOLDER	1							
	Q152004000	TORNIL, APLASTADO M5x13 A304	FLAT HEADED BOLT M5x13 A304	2							
21	U852804000	PANEL LATERAL IZQUIERDO	LEFT SIDE PANEL	1							
	Q221343000	REMACHE EXAGONAL M6	HEXAGONAL RIVET M6	4							
	Q221342000	REMACHE EXAGONAL M5	HEXAGONAL RIVET M5	10							
	Q012043000	TORNILLO EXAGONAL M6x20 A304	HEXAGONAL BOLT M6x20 A304	8							
22	X260151000	PATA REGULABLE	ADJUSTABLE LEG	4							
	Q411304000	REMACHE AVIBULB Ø 4,8	AVIBULB RIVET Ø 4.8	16							
23	U862600000	LISTON SOPORTE PATAS	LEG SUPPORT STRIP	2							
24	U852814000	PANEL LATERAL EXTERIOR	EXTERIOR SIDE PANEL	1							
	Q152004000	TORNIL, APLASTADO M5x13 A304	FLAT HEADED BOLT M5x13 A304	2							

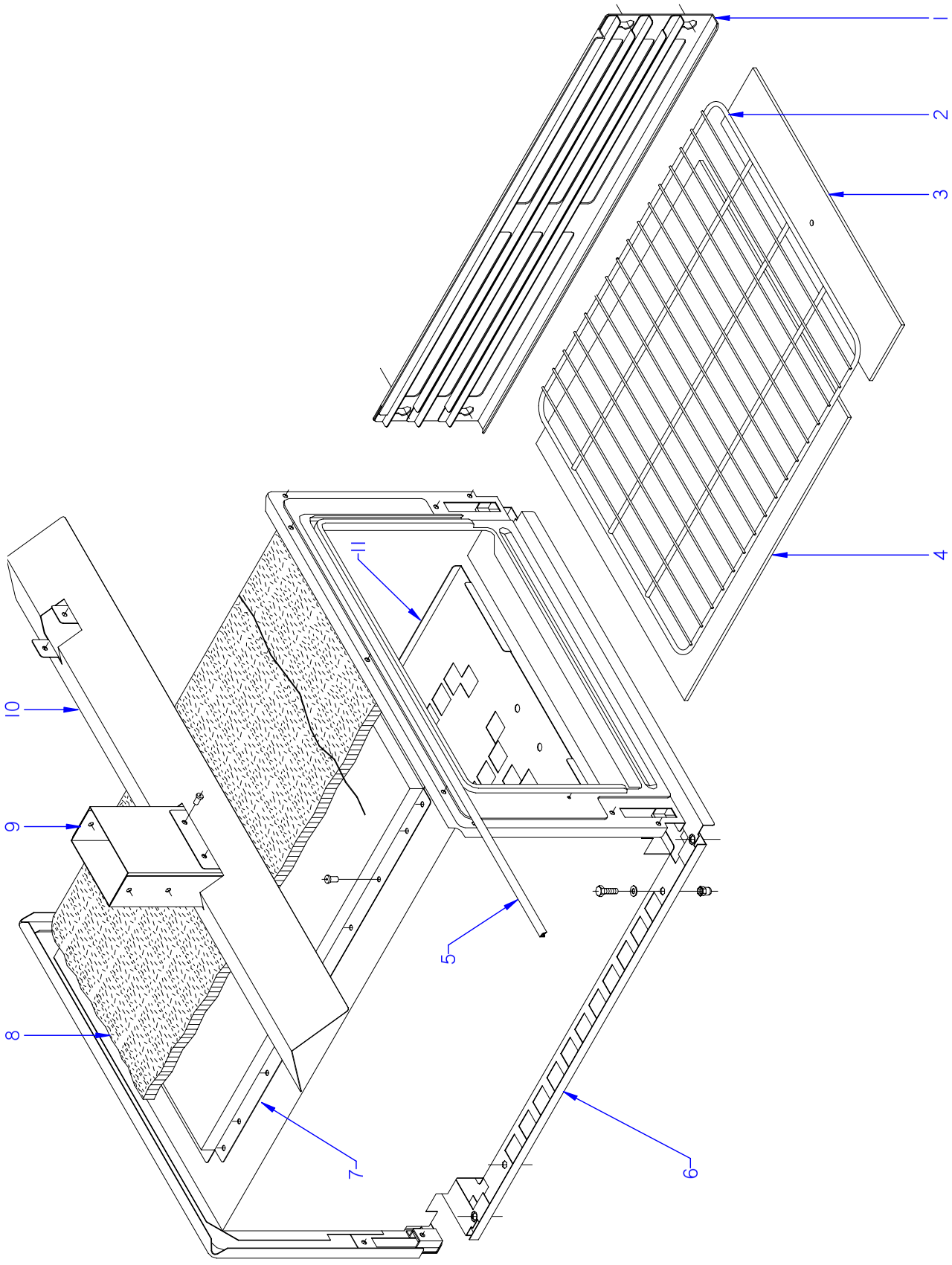

ITEM MARCADO EN COLOR = REPUESTO RECOMENDADO
COLOURED ITEM = RECOMMENDED SPARE PART

N plano	Firma	Fecha	Aparato	Lamina	
C-2689		2010-07	HORNO PASANTE / THROUGH OVEN COCINAS / RANGES CG-1002	2	Fagor Industrial S.Coop. Oñate

MOD.	COCINAS / RANGES	ZONA / ZONE	HORNO PASANTE / THROUGH OVEN	PLANO	C-2689

ITEM	CODIGO CODE	DENOMINACION	NAME	CG-1002							NOTAS
1	U855631000	GUIA LATERAL HORNO	OVEN SIDE GUIDE	2							
	R252624000	PITON SOPORTE GUIAS	PITON SUPPORT GUIDES	8							
	Q221343000	REMACHE EXAGONAL M6	HEXAGONAL RIVET M6	8							
	Q302022000	ARANDELA 16X6X1.2 A.304	WASHER 16X6X1.2 A.304	8							
2	U705640000	PARRILLA DE HORNO	OVEN TRAY	1							
3	U025634000	PLACA HORNO 530x210	OVEN PLATE 530x210	2							
4	U025635000	PLACA HORNO COMPL. 530x450	OVEN PLATE COMPL. 530x450	1							
5	U025623000	JUNTA PUERTA HORNO INOX	OVEN DOOR SEAL INOX.	2							
6	U855622000	HORNO MONTADO PASANTE INOX	THROUGH MOUNT OVEN INOX	1							
7	U855605000	CAMARA DE HUMOS	SMOKE CHAMBER	1							
	Q419005000	REMACHE 4X8 ALMG3 / ALUMINIO	RIVET 4X8 ALMG3 / ALUMINIUM	28							
8	U855608000	AISLANTE VITROFIB 880x90x20	VITROFIB INSULATI. 880x90x20	1							
9	U855606000	SEMICHIMENEA HORNO PASANTE	OVEN SEMICHIMENEA INTERN	2							
	Q419005000	REMACHE 4X8 ALMG3 / ALUMINIO	RIVET 4X8 ALMG3 / ALUMINIUM	14							
10	U862602000	VERTEDERO CENTRAL	CENTRAL LANDFILL	1							
	Q221343000	REMACHE EXAGONAL M6	HEXAGONAL RIVET M6	2							
11	U855604000	BASE DE HORNO	OVEN BASE	2							

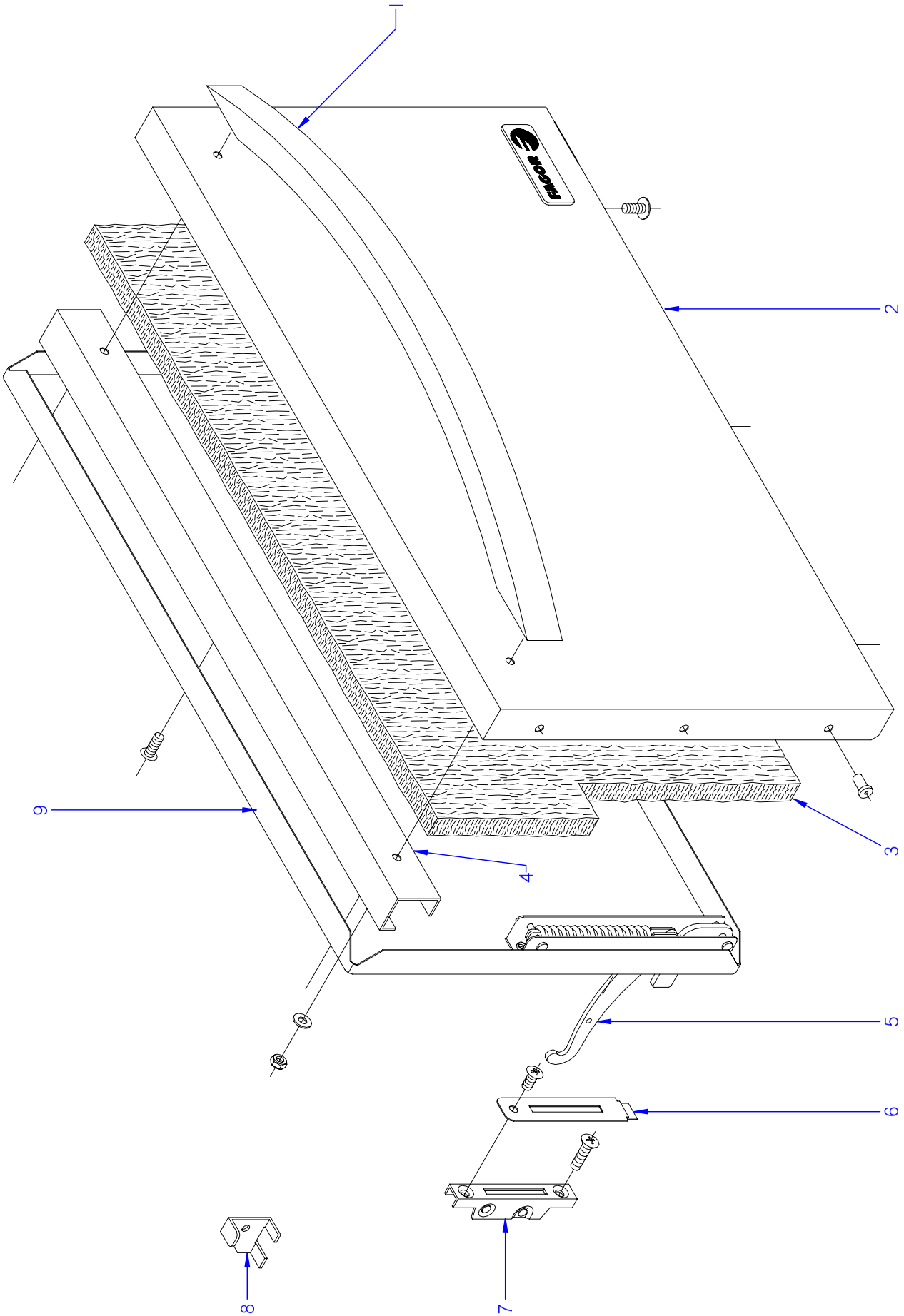

ITEM MARCADO EN COLOR = REPUESTO RECOMENDADO
COLOURED ITEM = RECOMMENDED SPARE PART

N plano	Firma	Fecha	Aparato		Lamina	
C-2690		2010-07	PUERTA / DOOR COCINAS / RANGES CG-1002		3	Fagor Industrial S.Coop. Oñate

MOD.	COCINAS / RANGES	ZONA / ZONE	PUERTA / DOOR	PLANO DIAGRAM	C-2690

ITEM	CODIGO CODE	DENOMINACION	NAME	CG-1002							NOTAS
1	U020504000	ASA DE HORNO	HANDLE	2							
	Q162030000	TUERCA EXAGONAL M5	HEXAGONAL NUT M5	4							
	Q302022000	ARANDELA 16x6x1,2 A304	WASHER 16x6x1.2 A304	4							
2	U850501000	PUERTA DE HORNO	OVEN DOOR	2							
	Q152017000	TORNILLO AMARRE M6X13 A304	FASTENING BOLT M6X13 A304	6							
	U262806000	ESCUDO FAGOR	FAGOR EMBLEM G700	2							
	Q221023000	CLIP SUJECIÓN RÁPIDA Ø5	RAPID CONNECT CLIP Ø5	4							
3	U260502000	AISLANTE 680X380X20	INSULATION 680X380X20	2							
4	U320507000	REFUERZO DE PUERTA	DOOR REINFORCEMENT	2							
5	U020528000	BISAGRA CIERRE HORNO	CLOSING HINGE OVEN	4							
	Q152017000	TORNILLO AMARRE M6X13 A304	FASTENING BOLT M6X13 A304	12							
6	U010510000	EMBELLECEDOR GUIA BISAGRA	HINGE GUIDE TRIM	4							
7	U010512000	GUIA DE BISAGRA	HINGE GUIDE	4							ELIMINADO 12.12.11
7	12041845	GUIA DE BISAGRA	HINGE GUIDE	4							INTRODUCIDO 12.12.11
8	U746501000	ESCUADRA MONTAJE PUERTA	DOOR ASSEMBLY BRACKET	2							
9	U020522000	CONTRAPUERTA HORNO	OVEN DOOR REVERSE	2							

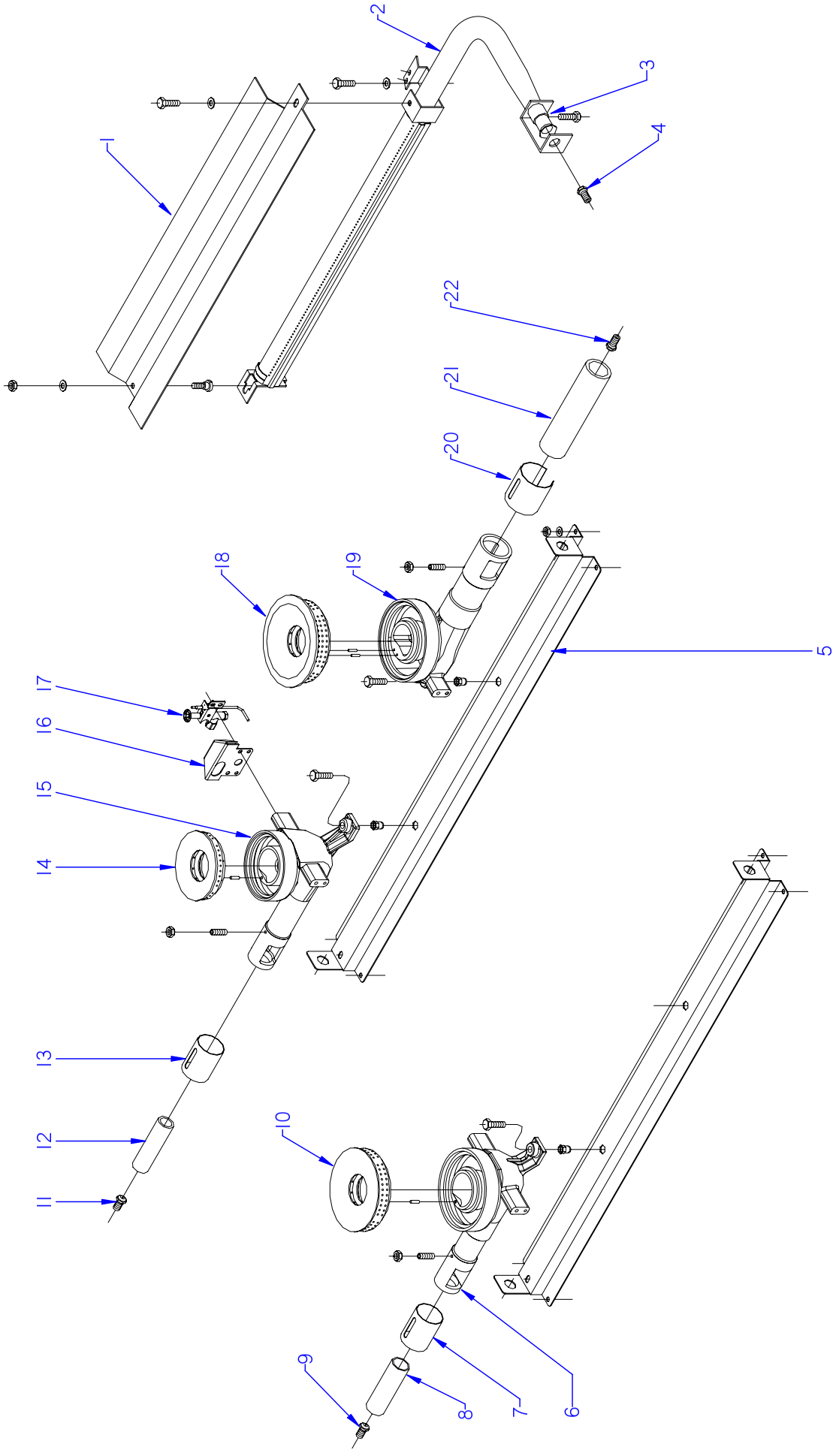

ITEM MARCADO EN COLOR = REPUESTO RECOMENDADO
COLOURED ITEM = RECOMMENDED SPARE PART

N plano	Firma	Fecha	Aparato		Lamina	
C-2691		2010-07	QUEMADORES / BURNERS COCINAS / RANGES CG-1202		4	Fagor Industrial S.Coop. Oñate

MOD.	COCINAS / RANGES	ZONA / ZONE	QUEMADORES / BURNERS	PLANO DIAGRAM	C-2691

ITEM	CODIGO CODE	DENOMINACION	NAME	CG-1002							NOTAS
1	U325708000	DIFUSOR QUEMADOR HORNO	OVEN BURNER DIFFUSER	1							
	R252624000	PITON SOPORTE	PITON SUPPORT	1							
	Q162004000	TUERCA EXAGONAL M6	HEXAGONAL NUT M6	1							
	Q302022000	ARANDELA 16x6x1,2 A304	WASHER 16x6x1.2 A304	1							
2	U855700000	QUEMADOR HORNO	OVEN BURNER	1							
3	U325707000	REGULADOR DE AIRE	AIR CONTROL	1							
	Q012031000	TORNILLO EXAGONAL M5x10 A304	HEXAGONAL BOLT M5X10 A304	1							
4	N502401000	TOBERA Ø 1,70 B.P.	NOZZLE Ø 1,70 B.P.	1							
4	U054400000	TOBERA Ø 2,5 G.N.	NOZZLE Ø 2,5 G.N.	1							
4	9424500000	TOBERA Ø 5,35 G.V.	NOZZLE Ø 5,35 G.V.	1							
5	U862604000	LISTON SOPORTE QUEMADOR	BURNER SUPPORT STRIP	2							
	Q162004000	TUERCA EXAGONAL M6	HEXAGONAL NUT M6	8							
	Q302022000	ARANDELA 16x6x1,2 A304	WASHER 16x6x1.2 A304	8							
6	U025702000	CUERPO QUEMADOR 8.000 Kcal/H	BURNER BODY 8.000 Kcal/H	1							
	Q371026000	MANGUITO DE SUJECION Ø 4x14	HANDLE Ø 4x14	1							
	Q131542000	VARILLA ROSCADA M6x15	THREADED ROD M6X15	1							
	Q162004000	TUERCA EXAGONAL M6	HEXAGONAL NUT M6	1							
7	U265702000	REGULADOR DE AIRE	AIR CONTROL	1							
8	U565700000	VENTURI QUEMADOR 8.000	BURNER VENTURI 8.000	1							
9	631000000	TOBERA Ø 1,40 B.P. (8.000)	NOZZLE Ø 1,40 B.P. (8.000)	1							
9	R614500000	TOBERA Ø 2 G.N. (8.000)	NOZZLE Ø 2 G.N. (8.000)	1							
9	U262401000	TOBERA Ø 4,10 G.V. (8.000)	NOZZLE Ø 4,10 G.V. (8.000)	1							
10	U135702500	QUEMADOR 8000	BURNER 8000	1							
11	U122407000	TOBERA Ø 1,05 B.P. (4.000)	NOZZLE Ø 1,05 B.P. (4.000)	2							
11	9105100000	TOBERA Ø 1,5 G.N. (4.000)	NOZZLE Ø 1,5 G.N. (4.000)	2							
11	R302401000	TOBERA Ø 4 G.V. (4.000)	NOZZLE Ø 4 G.V. (4.000)	2							
12	U125720000	VENTURI QUEMADOR 4000	VENTURI BURNER 4000	2							
13	U265702000	REGULADOR DE AIRE	AIR CONTROL	2							
14	U445731000	QUEMADOR 4000 (00545-010)	BURNER 4000 (00545-010)	2							ELIMINADO 27.08.2012
14	12039162	QUEMADOR 4000 Kcal/H	BURNER 4000 Kcal/H	2							INTRODUCIDO 27.08.2012

MOD.	COCINAS / RANGES	ZONA / ZONE	QUEMADORES / BURNERS	PLANO DIAGRAM	C-2691

ITEM	CODIGO CODE	DENOMINACION	NAME	CG-1002							NOTAS
15	U025701000	CUERPO QUEMADOR 4000 Kcal/H	BURNER BODY 4000 Kcal/H	2							
	Q371026000	MANGUITO DE SUJECION Ø 4x14	HANDLE Ø 4x14	2							
	Q131542000	VARILLA ROSCADA M6x15	THREADED ROD M6X15	2							
	Q162004000	TUERCA EXAGONAL M6	HEXAGONAL NUT M6	2							
16	U025708000	PROTECTOR PILOTO POSTERIOR	REAR GUARD PILOT	4							
	Q419005000	REMACHE 4X8 ALMG3 / ALUMINIO	RIVET 4X8 ALMG3 / ALUMINIUM	4							
17	11U4421340	CONJUNTO PILOTO COMPLETO	COMPLETE PILOT UNIT	4							
S/Nº	X012126000	CUERPO SIN RAC. 901.210	BODY WITHOUT CONNEC. 901.2	4							
S/Nº	U134323000	RACORD BICONO 6 958.031	BICONE CONNECTION 6 958.031	4							
S/Nº	U442132000	CABEZA PILOTO 975.016	PILOT HEAD 975.016	4							
S/Nº	U442131000	AMARRE DELANTERO PI 978.021	FRONT FASTENING PI 978.021	4							
S/Nº	U442130000	AMARRE TRASERO PI 978.009	REAR FASTEN. PI 978.009	4							
S/Nº	X012116000	TORNILLO AMA. 953.007	FAST. BOLT 953.007	4							
S/Nº	X012122000	REGULADOR AIRE 912.001	AIR CONTROL 912.001	4							
S/Nº	U442137000	INYECTOR Ø 0,4 GN	INJECTOR Ø 0.4 GN.	4							
18	U235701500	DIFUSOR 10.500 Kcal/H	DIFFUSER 10.500 Kcal/H	1							ELIMINADO 22.10.2012
18	12047137	DIFUSOR 10.500	DIFFUSER 10.500	1							INTRODUCIDO 22.10.2012
19	U025703000	CUERPO QUEMADOR 10000 Kcal/H	BURNER BODY 10000 Kcal/h	1							
	Q371028000	MANGUITO DE SUJECION Ø 3x14	HANDLE Ø 3x14	2							
	Q131542000	VARILLA ROSCADA M6x15	THREADED ROD M6X15	1							
	Q162004000	TUERCA EXAGONAL M6	HEXAGONAL NUT M6	1							
20	U025706000	REGULADOR DE AIRE 10.000	AIR CONTROL 10.000	1							
21	U235702000	VENTURI QUEMADOR 10.500	BURNER VENTURI 10,500	1							
22	U112401000	TOBERA Ø 1,55 B.P. (10.500)	NOZZLE Ø 1,55 B.P. (10.500)	1							
22	R275050000	TOBERA Ø 2,35 G.N. (10.500)	NOZZLE Ø 2,35 G.N. (10.500)	1							
22	U192402000	TOBERA Ø 4,90 G.V. (10.500)	NOZZLE Ø 4,90 G.V. (10.500)	1							

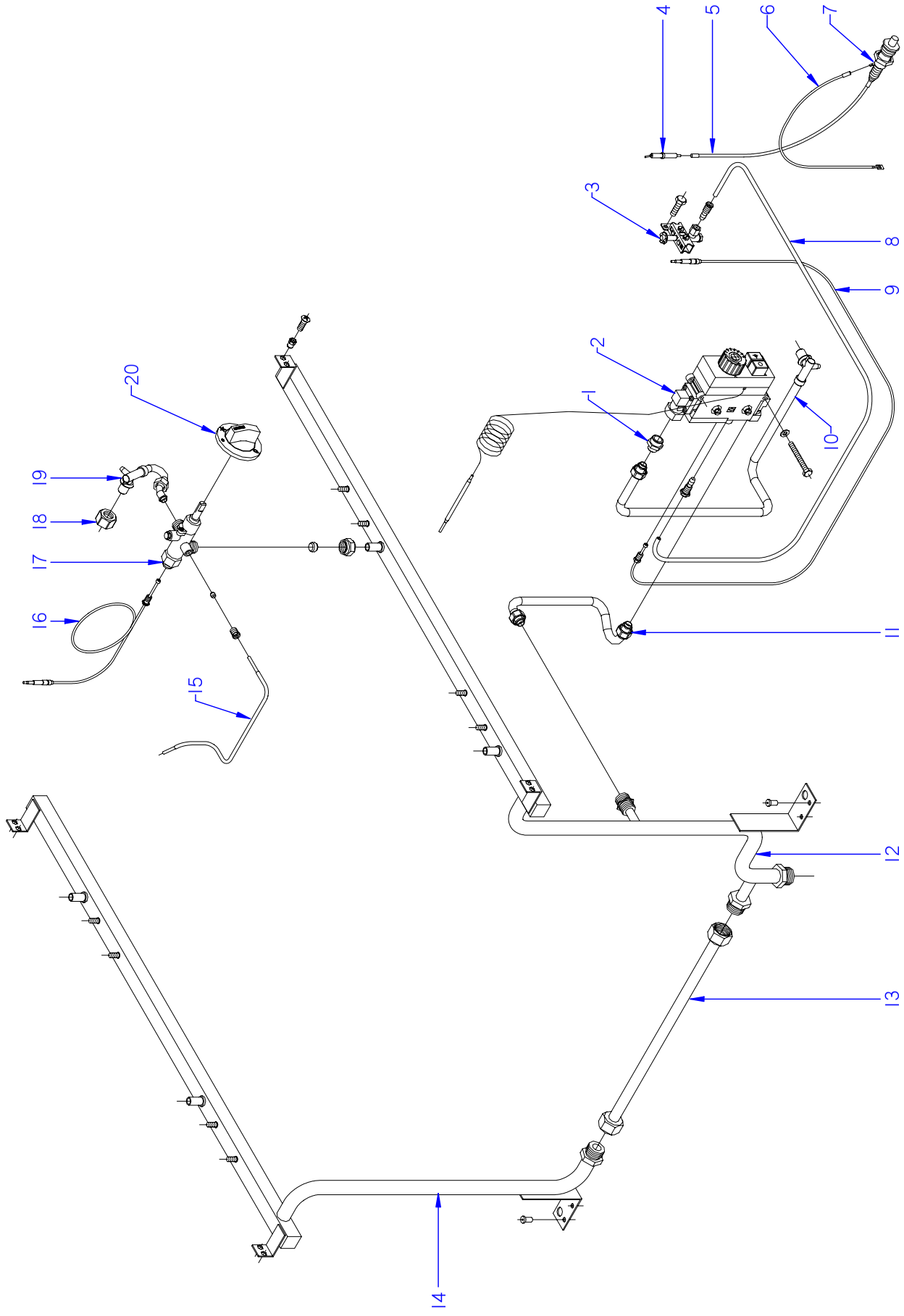

ITEM MARCADO EN COLOR = REPUESTO RECOMENDADO
COLOURED ITEM = RECOMMENDED SPARE PART

N plano	Firma	Fecha	Aparato	Lamina	
C-2692		2010-07	PARTE FUNCIONAL GAS / GAS FUNCTIONAL PART COCINAS / RANGES CG-1002	5	Fagor Industrial S.Coop. Oñate

MOD.	COCINAS / RANGES	ZONA / ZONE	PARTE FUNCIONAL GAS GAS FUNCTIONAL PART	PLANO DIAGRAM	C-2692

ITEM	CODIGO CODE	DENOMINACION	NAME	CG-1002							NOTAS
1	U875017000	MANGUITO R3/8"-R1/2"	HOSE R3/8"-R1/2"	2							
	U055043000	BICONO Ø 12	BICONE Ø 12	2							
2	U134324000	VALVULA MINISIT 0710.654	VALVE MINISIT 0710.654	1							
S/Nº	U134317000	MANDO NEGRO MINI 916.124	BLACK CTRL. MINI 916.124	1							
S/Nº	U134318000	CUBIERTA MINISIT 903.052	COVER MINISIT 903.052	1							
S/Nº	Q031322000	TORNILLO ALOMADO M4x15	CURVED SCREW M4X15	8							
S/Nº	U134323000	RACORD BICONO 6 958.031	BICONE CONNECTION 6 958.031	1							
S/Nº	U264300000	RACOR 3/8 906,252	CONNECTION 3/8 906.252	2							
S/Nº	Q307041000	JUNTA TORICA 25,4x20,2x2,6	O-RING 25.4x20.2x2.6	2							
3	U322118000	PILOTO COMPLETO BP 100.162	PILOT UNIT BP 100.162	1							
S/Nº	U442137000	INYECTOR Ø 0,4 GN	INJECTOR Ø 0.4 GN.	1							
4	X022131000	BUJIA	SPARK PLUG	1							
5	U323030000	CABLE BUJIA	SPARK PLUG CABLE	1							
6	U333003000	CABLE MASA ENCENDEDOR	LIGHTER EARTH CABLE	1							
7	S113034000	PIEZOELECTRICO	PIEZOELECTRIC	1							ELIMINADO 02.05.12
7	12043897	PIEZOELECTRICO COMPLETO	COMPLETE PIEZOELECTRIC	1							INTRODUCIDO 02.05.12
S/Nº	12043907	ANILLO ADAPTADOR	ADAPTER RING	1							INTRODUCIDO 02.05.12
8	U565036000	TUBO PILOTO HORNO	PILOT PIPE BURNER	1							
	U134323000	RACORD BICONO 6 958.031	BICONE CONNECTION 6 958.031	2							
9	U562130000	TERMOPAR L=850	THERMOCOUPLE L=850	1							
10	U025017000	TUBO MINISIT A QUEMADOR	MINISIT BURNER PIPE	1							
	Q223019000	TUERCA 3/8 GAS LATÓN	NUT 3/8 BRASS GAS	1							
	U055043000	BICONO Ø 12	BICONE Ø 12	1							
	Q153002000	TORNILLO TAPON	SCREW CAP	1							
11	U025014000	TUBO EMPALME A MINISIT	SPLICE TUBE MINISIT	1							
12	U865000000	COND. GENERAL CG-1202 ANTER.	BEF. GENERAL PIPING CG-1202	1							
	Q411304000	REMACHE AVIBULB Ø 4,8	AVIBULB RIVET Ø 4.8	2							
13	U855010000	TUBO DISTRIBUIDOR COMPLETO	FULL DISTRIBUTOR PIPE	1							

MOD.	COCINAS / RANGES	ZONA / ZONE	PARTE FUNCIONAL GAS GAS FUNCTIONAL PART	PLANO DIAGRAM	C-2692

ITEM	CODIGO CODE	DENOMINACION	NAME	CG-1002							NOTAS
14	U865002000	COND. GENERAL CG-1202 POST.	BACK GENERAL PIPING CG-1202	1							
	Q411304000	REMACHE AVIBULB Ø 4,8	AVIBULB RIVET Ø 4.8	2							
	Q152004000	TORNIL, APLASTADO M5x13 A304	FLAT HEADED BOLT M5x13 A304	2							
	Q221342000	REMACHE EXAGONAL M5	HEXAGONAL RIVET M5	2							
15	U855012000	TUBO PILOTO (4000)	PILOT PIPE (4000)	2							
15	U855013000	TUBO PILOTO (8000/10500)	PILOT PIPE (8000/10500)	2							
	X205028000	BICONO Ø 6	BICONE Ø 6	4							
	U195009000	MANGUITO EMPALME	SPLICE HOSE	4							
16	U222130000	TERMOPAR L=600	THERMOCOUPLE L=600	4							
17	U702101000	GRIFO CAL 3200/11 Ø1,30	TAP CAL 3200/11 Ø1,30	1							
17	U249402000	GRIFO CAL 3200 Ø0,90	TAP CAL 3200 Ø0,90	1							
17	U249401000	GRIFO CAL 3200 Ø0,55	TAP CAL 3200 Ø0,55	2							
	Q221336000	TUERCA M-18x1,5	HEXAGONAL M-18x1,5	4							
	U055043000	BICONO Ø 12	BICONE Ø 12	4							
18	U565011000	TUERCA GUIA	NUT GUIDE	3							
18	U235703000	TUERCA GUIA 10.500	NUT GUIDE 10500	1							
19	U865005000	CONDUCCION A QUEMADOR	BURNER PIPE	4							
20	U542101000	BOTON DE MANDO Ø 10	CONTROL BUTTON Ø 10	4							

MOD.	COCINAS / RANGES	ZONA / ZONE	VARIOS / MISCELLANEOUS	PLANO DIAGRAM	

ITEM	CODIGO CODE	DENOMINACION	NAME	CG-1002							NOTAS
	U706502000	FOLLETO INSTRUCCIONES	INSTRUCTION LEAFLET	1							

MOD.	COCINAS / RANGES	ZONA / ZONE	REPUESTOS RECOMENDADOS RECOMMENDED SPARE PART	PLANO DIAGRAM	

ITEM	CODIGO CODE	DENOMINACION	NAME	CG-1002							NOTAS
5	U020528000	BISAGRA CIERRE HORNO	CLOSING HINGE OVEN	4							C-2690
7	12041845	GUIA DE BISAGRA	HINGE GUIDE	4							C-2690
17	11U4421340	CONJUNTO PILOTO COMPLETO	COMPLETE PILOT UNIT	4							C-2691
S/Nº	U442137000	INYECTOR Ø 0,4 GN	INJECTOR Ø 0.4 GN.	4							C-2691
2	U134324000	VALVULA MINISIT 0710.654	VALVE MINISIT 0710.654	1							C-2692
3	U322118000	PILOTO COMPLETO BP 100.162	PILOT UNIT BP 100.162	1							C-2692
S/Nº	U442137000	INYECTOR Ø 0,4 GN	INJECTOR Ø 0.4 GN.	1							C-2692
4	X022131000	BUJIA	SPARK PLUG	1							C-2692
5	U323030000	CABLE BUJIA	SPARK PLUG CABLE	1							C-2692
6	U333003000	CABLE MASA ENCENDEDOR	LIGHTER EARTH CABLE	1							C-2692
7	12043897	PIEZOELECTRICO COMPLETO	COMPLETE PIEZOELECTRIC	1							C-2692
9	U562130000	TERMOPAR L=850	THERMOCOUPLE L=850	1							C-2692
16	U222130000	TERMOPAR L=600	THERMOCOUPLE L=600	4							C-2692
17	U702101000	GRIFO CAL 3200/11 Ø1,30	TAP CAL 3200/11 Ø1,30	1							C-2692
17	U249402000	GRIFO CAL 3200 Ø0,90	TAP CAL 3200 Ø0,90	1							C-2692
17	U249401000	GRIFO CAL 3200 Ø0,55	TAP CAL 3200 Ø0,55	2							C-2692