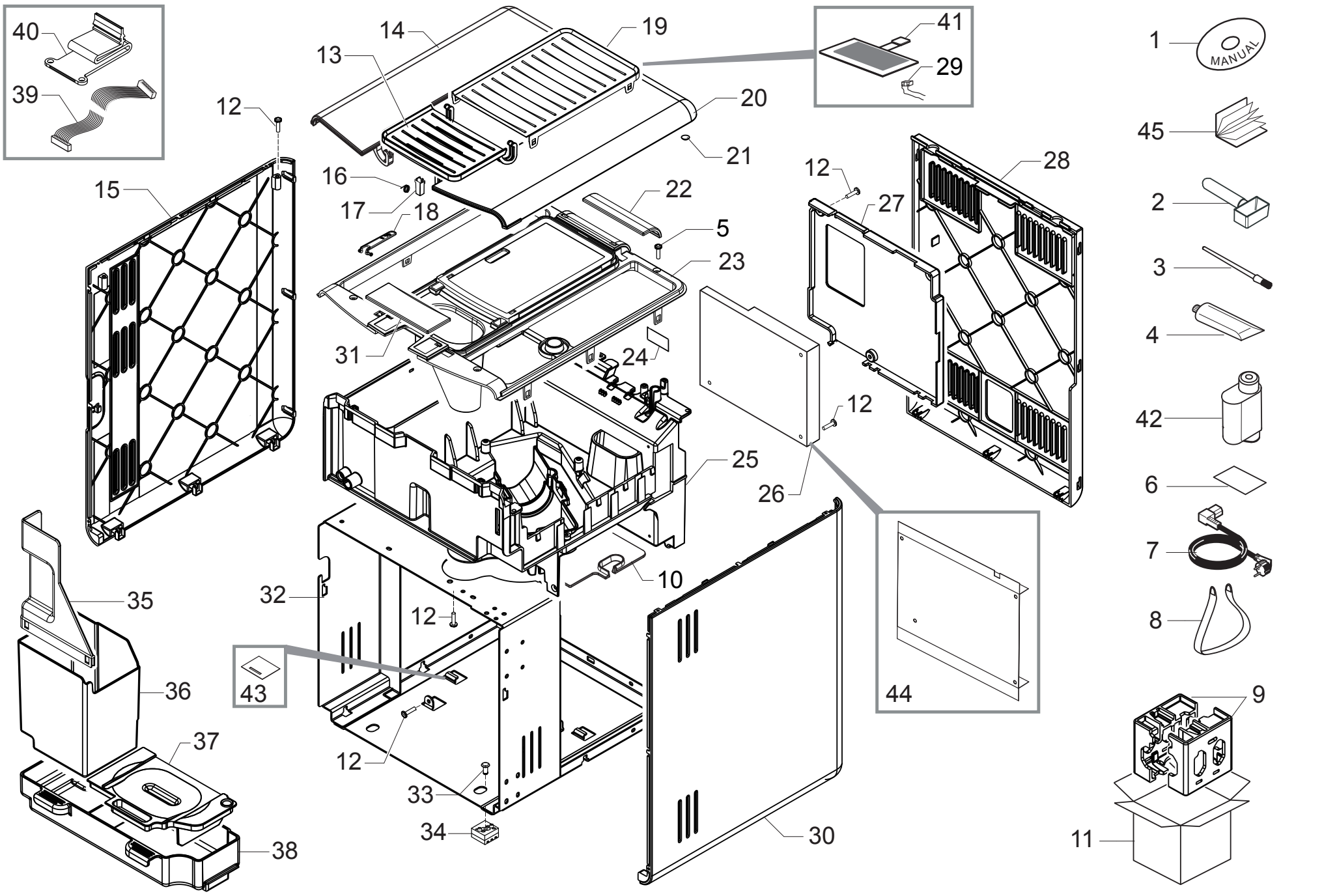

Saeco INTERNATIONAL GROUP

HD8953/01-09-11-19
HD8954/01-09-47

CE **Cod.10004414-4415-4365-4366**
Cod.10004367-68-882895447540

POS	CODE	12NC	DESCRIPTION	NOTE
01	15003524	996530073368	DOCUMENTATION CD MYBE XELSIS EVO ASSY.	
02	146680850	996530016529	BLACK COFFEE MEASURE SMART	
03	127390100	996530011867	BRUSH FOR CLEANING	
04	11028379	996530070318	PSA KLUBER TRIBOSTAR SIL 2 TUBE 5GR.	
05	12001728	996530070321	SCREW TCBR TORX 10 3,5X12 PLAST.SS	
06	0301.961	996530039604	STICKER FOR WATER HARDNESS TEST	
07	183911050	996530025808	BLACK POWER CABLE SCHUKO L=1200	
	183921950	996530025843	BLK POWER CABLE SJT3 USA UL L=1200	
08	13001097	996530008404	BAND FOR LIFTING L=1800MM H=300MM	
09	20006891	996530067538	KIT PS-E INSERT FOR BOX MYB9	
10	-	421944005541	BLK SLIM BOILER PROTECTION V2 MYB9	
11	13001710	996530073374	DISPLAY BOX MYBE SAE XELSIS EVO WE	
	-	421940312181	DISPL.BOX MYBE SAE XELSIS EVO USA	
12	12000450	996530007819	SCREW TCBR TORX 10 3,5X12 PLAST.ZN-N	
13	11025978	996530072657	SB/SS GROUND CONT.DOOR COVER S/S.MYB9 AS	
14	11031317	996530073383	MATT/BLK WATER CONTAIN.DOOR COVER MYB9/P	CLASS / FULL
	11029403	996530072665	SB/SS WATER CONT.DOOR COVER V2 MYB9 ASSY	HIGH / SS
15	11031315	996530073378	MATT/BLACK LEFT SIDE PANEL MYB9/P	CLASS / FULL
	11028790	996530072664	SB/SS LEFT SIDE PANEL V2 MYB9/H-T ASSY.	HIGH / SS
16	11022426	996530007365	SS SPRING FOR WATER CONTAINER LEVER MYB9	
17	12001263	996530008019	BLACK PUSH-PUSH MYB9	
18	11022425	996530007364	YELLOW LEVER FOR WATER CONTAIN.S/SC.MYB9	
19	11025965	996530072656	SB/SS CUP WARMING LID V2 MYB9	
20	11031318	996530073375	MATT/BLK BEAN CONTAIN.DOOR COVER MYB9/P	CLASS / FULL
	11029385	996530072661	SB/SS BEAN CONT.DOOR COVER V2 MYB9 ASSY.	HIGH / SS
21	12001330	996530008026	TRANSP.ROUND ADHESIVE FOOT SJ-5382	
22	11022821	996530007454	BLK REAR COVER CASING INSERT MYB9 ASSY.	CLASS / FULL
	11025964	996530072663	SB/SS REAR COVER CASING INSERT MYB9 ASSY	HIGH / SS
23	17000205	996530066735	BLACK COVER CASING W/PROTECT.V2 MYB9/H-T	
24	11003232	996530001522	AS.CPU+SW WATER LEVEL SENSOR V2	
25	11014017	996530006969	BLACK HORIZONTAL MOUNTING PLATE MYB9 ASS	
26	11024263	996530067506	PWR BOARD MDS 230V	230V
	11021342	996530007079	PWR BOARD MYB9/MDS 120V	120V
27	11012035	996530006299	BLACK PWR BOARD COVER MYB9	
28	17000123	996530067922	BLACK REAR PANEL WHIT LOGO SAECO V2 MYB9	
29	11008844	996530005056	2POLES CONNECT.SUPPLY CUPWARMING G0053UL	
30		421944001481	M/BLK RIGHT SIDE PANEL V2 MYB9/P	CLASS / FULL

POS	CODE	12NC	DESCRIPTION	NOTE
30	11028791	996530072662	SB/SS RIGHT SIDE PANEL V2 MYB9/H-T ASSY.	HIGH / SS
31	11022807	996530007449	BLK FRONT COVER CASING INS.MYB9/H-P ASSY	CLASS / FULL
	11025962	996530072659	SB/SS FRONT COVER CASING INS.MYB9/H-P AS	HIGH / SS
32	11013170	996530006676	BLACK STEEL CASING MYB9 ASSY.	
33	11021769	996530007136	BLACK RIGID FOOT FIXING PIN MYB9	
34	11021829	996530007156	BLACK/TRANSP.RIGID FOOT MYB9	
35	11022527	996530007397	BLACK DUMP BOX PROTECTION MYB9	
36	11013595	996530006815	BLACK DUMP BOX MYB9 ASSY.	
37	11022169	996530007247	BLK DRIP TRAY COFF.BREW UNIT COVER MYB9	
38	17001901	996530071992	BLACK COFFEE UNIT DRIP TRAY V2 MYB9	
39	11013128	996530006642	40POLES FLAT CABLE BOARDS LINK MYB9 UL	
40	11013806	996530006864	BLACK FLAT-CABLE PROTECTION MYB9	
41	WGA4316031000	996530063553	ADHESIVE HEATING-ELEMENT 230V	230V
	11000791	996530000503	ADHESIVE HEATING-ELEMENT 120V	120V
42	21002050	996530071872	ACC PSA BRITA WATER FILTER 1UNIT	
	21002051	996530071783	ACC PSA MAVEA WATER FILTER 1UNIT	
43	17000007	996530066726	COMPONENTS SUPPORT INSULATE SHEET MYB9	
44	11023304	996530007613	PWR ELECTR.BOARD INSULATE SHEET MYB9	
45	15004134	996530073615	MANUAL SAE HD8953/HD8954 MYBE GB	
	15004135	996530073617	MANUAL SAE HD8953/HD8954 MYBE FR	
	15004136	996530073616	MANUAL SAE HD8953/HD8954 MYBE ES	

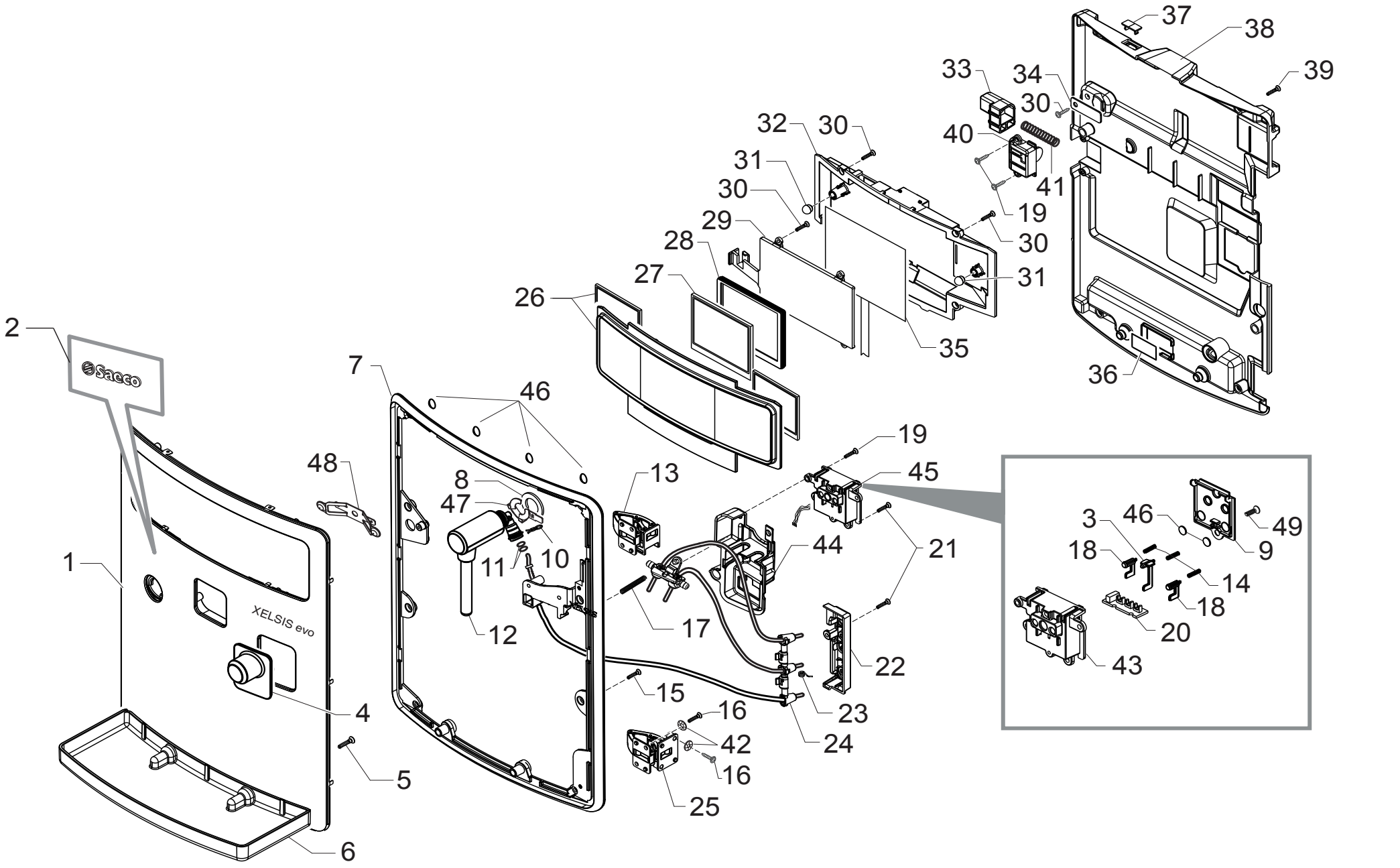

Saeco INTERNATIONAL GROUP

HD8953/01-09-11-19
HD8954/01-09-47

CE **Cod.10004414-4415-4365-4366**
Cod.10004367-68-882895447540

POS	CODE	12NC	DESCRIPTION	NOTE
01	11031550	996530073371	SB/SS FRONTAL PANEL S/SCR.MYBE ASSY.	CLASS/ HIGH/ SS
	11031551	996530073377	MATT/BLK FRONTAL PANEL S/SCR.MYBE ASSY.	FULL
02	11030768	996530072703	ADHES.SILVER PLATE LOGO SAECO NPR	
03	17000045	996530009578	BLK PRESENCE CARAFE MICRO INSERT V2 MYB9	
04	11024247	996530066715	CHROM.CONNEC.CAP FOR CARAFE V2 MYB9 ASSY	
05	12001369	996530008039	SCREW TSP TORX 10 5X35 PLAST.SS	
06	17000223	996530070223	BLACK DRIP TRAY SUPPORT V2 MYB9/T ASSY.	
07	11023393	996530007625	CHROM.ZAMA FRONT FRAME V2 MYB9	
08	11001624	996530000929	BLACK STEAM TUBE WASHER P0049	
09	11013328	996530006745	BLACK CARAFFE BOARD COVER MYB9	
10	9011.144	996530048885	SS FORK FOR TUBE D=4	
11	140328059	996530013564	OR 2015 SILICONE PTFE/FDA	
12	11013244	996530006708	TF/CHROM.- CHROM.STEAM TUBE MYB9 ASSY.	
13	17000106	996530009584	ZAMA DOOR UPPER HINGE V2 MYB9	
14	17000019	996530009566	SS CARAFE MICRO INSERT SPRING MYB9	
15	12001430	996530008051	SCREW TCBR TORX 20 4X10 PLAST.SS	
16	129823821	996530013079	TCB SCREW M4X8 UNI 7687 SS	
17	17000006	996530009559	TWO WAY TEFLON TUBES SUPPORT SPRING MYB9	
18	17000002	996530009555	BLACK CARAFE MICRO INSERT V2 MYB9	
19	12000450	996530007819	SCREW TCBR TORX 10 3,5X12 PLAST.ZN-N	
20	11013368	996530006754	MILKCARAFFE BOARD V2 MYB9	
21	12001431	996530008052	SCREW TCB TORX 10 3X12 PLAST.SS	
22	11013784	996530006855	BLACK TEFLON TUBES SUPPORT COVER MYB9	
23	11013785	996530006856	STEEL TEFLON TUBES SUPPORT SPRING MYB9	
24	11023352	996530066675	WHT PREFORM.TEFLON TUBES SUPP.MYB9 ASSY.	
25	17000094	996530009581	DOOR LOWER HINGE V2 MYB9	
26	20006820	996530010248	KIT SPARES FRONT PLATE DISPLAY MYB9/H-T	COMPLETE
27	12001261	996530008018	DISPLAY 320x240 NO TOUCH BRIGHTNESS+MYB9	
28	11013226	996530006702	BLACK DISPLAY SEAL MYB9/H-T	
29	11012889	996530006568	BLACK DISPLAY SUPPORT MYB9/H-T	
30	129913202	996530013156	SCREW TCB TORX 10 3X8 PLAST.ZN-B	
31	149450588	996530018311	65SH SILICONE BOILER SEALING VALVE	
32	17000014	996530009564	BLACK CPU BOARD COVER V2 MYB9/H-T	
33	11014215	996530007042	BLACK BUTTON FOR DOOR RELEASE MYB9	
34	11021976	996530007207	STEEL PLATE FOR DOOR CLOSURE MYB9	
35	11031528	996530073367	CPU+SW MYB9/H SLIM V2 ASSY.	
36	11000651	996530000425	WATER LEVEL SENSOR BOARD P124	

POS	CODE	12NC	DESCRIPTION	NOTE
37	11001339	996530000763	TRANSP.INFRAREDS PLATE P0049	
38		421944006981	BLK INSIDE COVER FRON.PANEL V4 MYB9/H	
39	129912521	996530013148	SCREW TCBR TORX 10 3,5X14 PLAST.SS	
40	11014218	996530007043	BLACK COVER BUTTON FOR DOOR RELEASE MYB9	
41	11021747	996530007128	SPRING FOR DOOR RELEASE BUTTON MYB9	
42	128310402	996530012341	GALV.WASHER UNI 8842 A4	
43	11023238	996530007602	BLK CARAFE BOARD SUPPORT V4 MYB9 ASSY.	
44	11023251	996530007606	BLACK FRONTAL PANEL INSERT MYB9	
45	11023423	996530066676	BLK CARAFFE BOARD SUPP.GEN.V2 MYB9 ASSY.	
46	12001330	996530008026	TRANSP.ROUND ADHESIVE FOOT SJ-5382	
47	17000055	996530072431	GALVAN/STEEL FOLK SPRING W/FASTON	
48	11006740	996530003793	BRONZE SPRING FOR FRONT CASING G0053	
49	12000895	996530007951	SCREW TSP TORX 10 3X10 PLAST.SS	

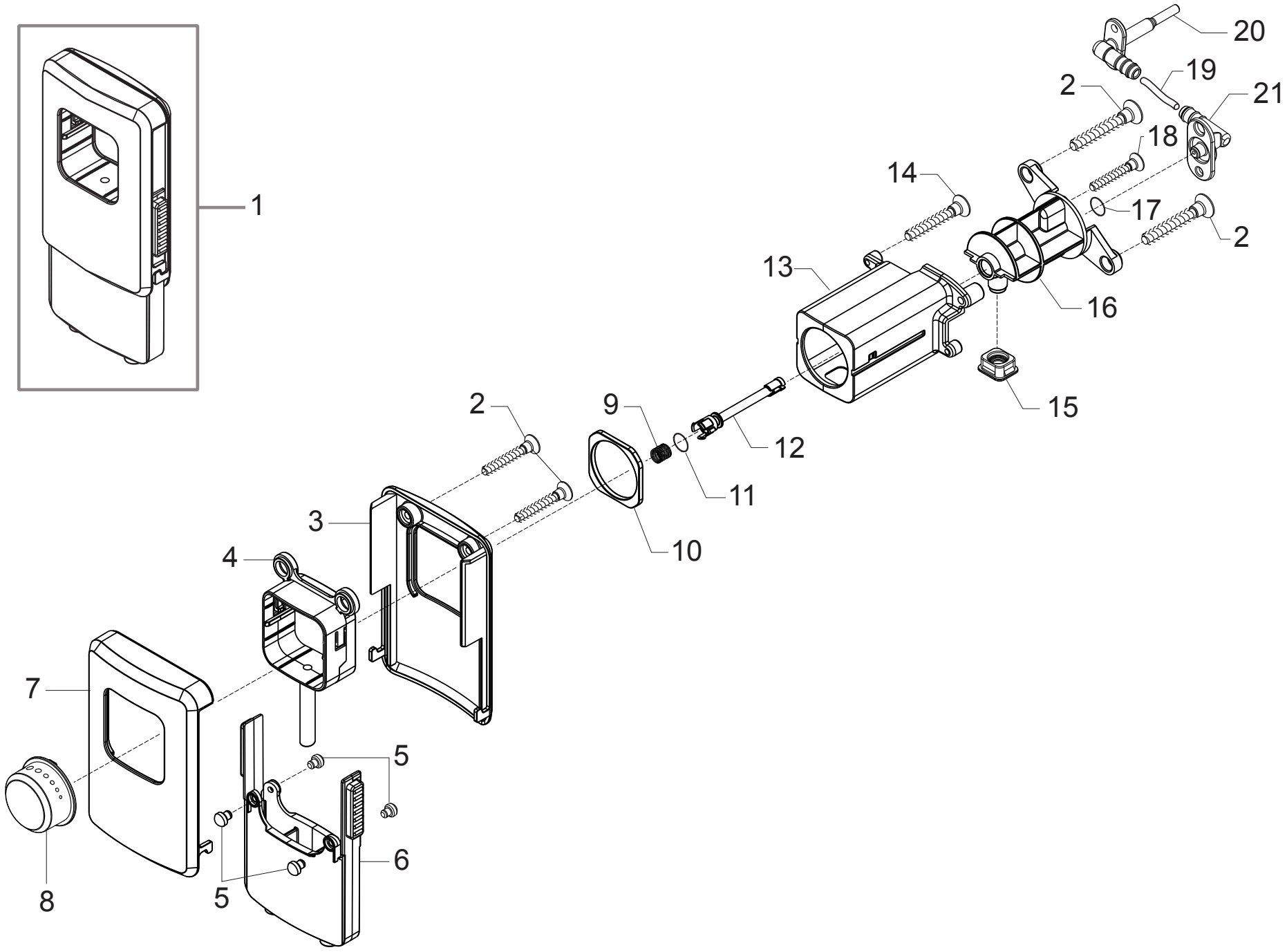

Saeco INTERNATIONAL GROUP

HD8953/01-09-11-19
HD8954/01-09-47

CE **Cod.10004414-4415-4365-4366**
Cod.10004367-68-882895447540

POS	CODE	12NC	DESCRIPTION	NOTE
01	11027228	996530070234	CHROM.COFFEE DISPENSER V2 MYB9 ASSY.	
			WITH PART. N° 02 - 03 - 04 - 05 - 06 - 07	
02	129570721	996530012907	SCREW TCB TORX 10 M3X8 AUTOFORMING SS	
03	11013001	996530006579	BLACK REAR COVER COFFEE DISPENSER MYB9	
04	11013003	996530006582	BLACK COFFEE DISPENSER INNER BODY MYB9	
05	11013085	996530006614	WHITE COFFEE DISPENSER SLIDER MYB9	
06	11013002	996530006581	BLACK COF.DISPENSER EXT.MOBILE PART MYB9	
07	11027227	996530070327	CHROM.FRONT COFF.DISPENSER COVER V2 MYB9	
08	11022128	996530007237	CHROM.CREAM ADJUSTMENT KNOB S/SCR.MYB9	
09	126772518	996530011711	SS COFF.CREAM ADJUSTMENT SHAFT SPRING	
10	11013324	996530006743	BLACK CREAM ADJUSTMENT KNOB RING MYB9	
11	140326661	996530013546	OR ORM 0040-20 BLACK EPDM	
12	140640200	996530013621	WHITE COFFEE CREAM ADJUSTMENT SHAFT	
13	11013323	996530006742	CHROM.COFFEE DISPENSER SUPPORT MYB9	
14	12000897	996530007953	SCREW TCB TORX 10 3,5X20 PLAST.SS	
15	11013072	996530006604	BLACK SEAL FOR COFFEE DISPENSER MYB9	
16	11013013	996530006585	BLACK COFFEE DISPENSER TUBE MYB9	
17	12000070	996530007732	OR ORM 0060-15 SILICONE	
18	12000450	996530007819	SCREW TCBR TORX 10 3,5X12 PLAST.ZN-N	
19	149360200	996530018269	SILICONE TUBE 5X8 70SR IN ROLL	
20	11013364	996530006752	BLACK DISPENSER COFF.INLET CONNECT.MYB9	
21	11012926	996530006575	BLACK COFFEE DISPENSER CONNECTOR MYB9	

POS	CODE	12NC	DESCRIPTION	NOTE

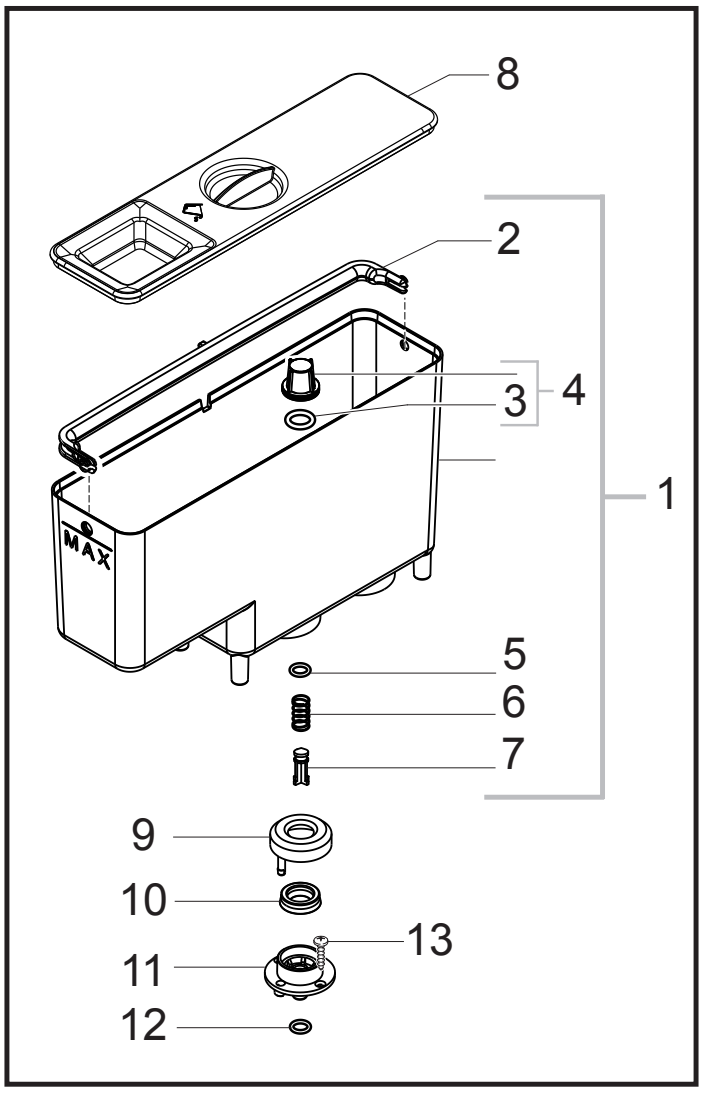

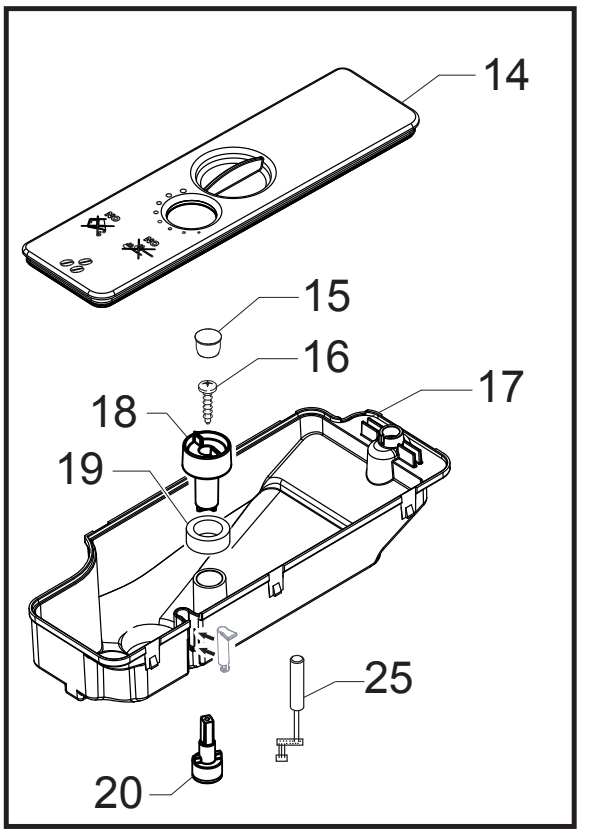

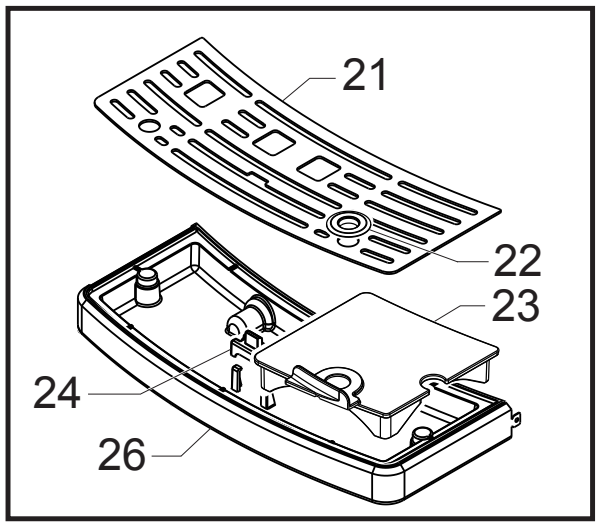

Saeco INTERNATIONAL GROUP

HD8953/01-09-11-19
HD8954/01-09-47

CE **Cod.10004414-4415-4365-4366**
Cod.10004367-68-882895447540

POS	CODE	12NC	DESCRIPTION	NOTE
01	11013212	996530006692	NAT/GREY WATER CONTAINER MYB9 ASSY.	
02	11012738	996530006509	BLACK HANDLE WATER CONTAINER LID MYB9	
03	140328461	996530013571	OR ORM 0190-10 EPDM	
04	224640200	996530029115	WHITE WATER CONTAINER EXT.FILTER ASSY.	
05	140324362	996530013507	OR ORM 0060-30 SILICONE	
06	126764718	996530011626	SS WATER CONTAINER VALVE SPRING	
07	147660562	996530016894	GREY PISTON FOR WATER CONTAINER VALVE	
08	11012736	996530006507	NAT/GREY WATER CONTAINER LID MYB9	
09	0701.031.150	996530044417	GREY WATER VALVE GACO DIM 14 SEAL COVER	
10	145842900	996530015823	NBR WATER CONT.VALVE GACO DIM14 SEAL	
11	0701.014.150	996530044404	GREY WATER VALVE GACO DIM 14 SEAL CONT.	
12	140320461	996530013446	OR ORM 0080-20 TERMOIL	
13	129535721	996530012898	SCREW TSP TORX 10 AB 3,5X9,5 SHEET SS	
14	17000202	996530066734	NAT/GREY BEAN COFF.CONT.LID V2 MYB9 ASSY	
15	149213059	996530018116	GREY CAP FOR KNOBS BEAN CONTAINER	
16	129913902	996530013164	SCREW TCB TORX 10 3X12 PLAST.ZN-B	
17	17000194	996530066733	BLACK BEAN CONTAINER V2 MYB9	
18	11012852	996530006551	BLACK GRIND.ADJUSTMENT KNOB MBY9	
19	11022528	996530007398	GREY GRIND.ADJUSTMENT KNOB WASHER MYB9	
20	145897300	996530016123	BLK INSERT GRIND.ADJUSTMENT KNOB SMART1	
21	11031532	996530073385	SB/SS DRIP TRAY GRATE MYB9/T	
22	17000147	996530066732	BLACK GRATE SEAL V3 MYB9/H-P	
23	11022384	996530007344	BLACK DRIP TRAY COVER MYB9/T	
24	17000001	996530009554	RED FLOAT FOR DRIP TRAY MDS	
25	17800061	996530066741	5POLES CONNECTOR MC SENSORS V2 MYB9 UL	
26	11031531	996530073388	SB/SS-BLACK DRIP TRAY MYB9/T ASSY.	

POS	CODE	12NC	DESCRIPTION	NOTE

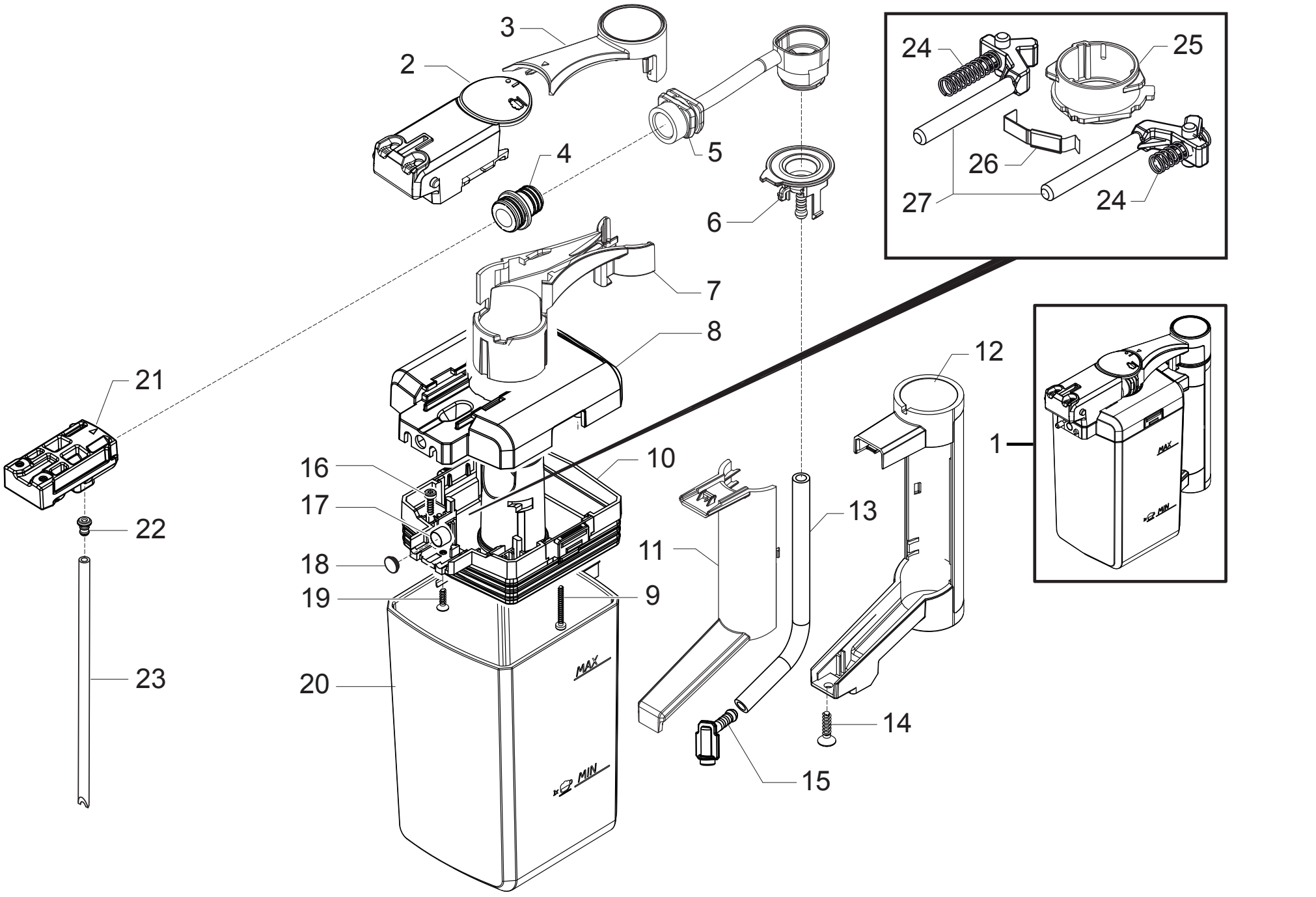

Saeco INTERNATIONAL GROUP

HD8953/01-09-11-19
HD8954/01-09-47

CE **Cod.10004414-4415-4365-4366**
Cod.10004367-68-882895447540

POS	CODE	12NC	DESCRIPTION	NOTE
01		421941300151	TRANSP/CHROM.GEN.CARAFE MDS/P ASSY.	
02	11023235	996530007599	CHR.CARAFE CAPP.COVER V2 S/SC.MYB9 ASSY.	
03		421941300231	CHROM.CARAFE UP.DISP.SUPP.S/S.MDSE ASSY.	
04	11012812	996530006527	VENTURI TUBE FOR CAPPUCCINATORE MYB9	
05	17001880	996530073248	BLACK CARAFE MILK DISPENSER TUBE V2 MDSE	
06	17001564	996530072547	BLACK UPPER TUBE CARAFE CONNECT.MDSE	
07		421941300171	CHROM.CARAFE LOWER DISPENSER SUPP.MDSE	
08	11030950	996530072575	MATT/BLACK UPPER COVER PART CARAFE MYB9	
09	12000550	996530007838	SCREW TCB TORX 10 3X25 PLAST.SS	
10	11021893	996530007192	BLACK LOWER COVER PART CARAFE MYB9 ASSY.	
11		421941300271	CHROM.CARAFE REAR PART HANDLE MDSE	
12		421941300251	CHROM.CARAFE FRONT PART HANDLE MDS/P	
13	149360200	996530018269	SILICONE TUBE 5X8 70SR	IN ROLL
14	129911721	996530013137	SCREW TSP TORX 4X16 PLAST STEEL	
15	11013164	996530006669	BLACK LOWER TUBE CARAFE CONNECT.MYB9	
16	129910921	996530013128	SCREW TCB TORX 10 3X10 SS	
17	9161.111	996530050555	MAGNET FOR FLOAT SUPERAUT.	
18	11014016	996530006968	SS.INSERT FOR MAGNET MYB9	
19	12000895	996530007951	SCREW TSP TORX 10 3X10 PLAST.SS	
20	11024104	996530007705	TRANSP.CARAFE V3 S/SCREEN MYB9	
21	17000004	996530009557	BLK CARAFE CAPPUCCIN.CASING W/CAPS MYB9	
22	17001076	996530072552	GREY MILK TUBE CONNECTOR MDSE	
23	11012814	996530067584	SILICONE TUBE 3,5X6 L=140 MM	
24	11013765	996530006849	STEEL SPRING FOR CARAFE LEVER MYB9	
25	17001728	996530072607	BLACK CAM FOR CARAFE LEVERS MDSE	
26	11013832	996530006873	CARAFE SPRING WITH INSERT MYB9 ASSY.	
27	17000131	996530067459	BLACK LEVER FOR CARAFE CAM V3 MYB9	

POS	CODE	12NC	DESCRIPTION	NOTE

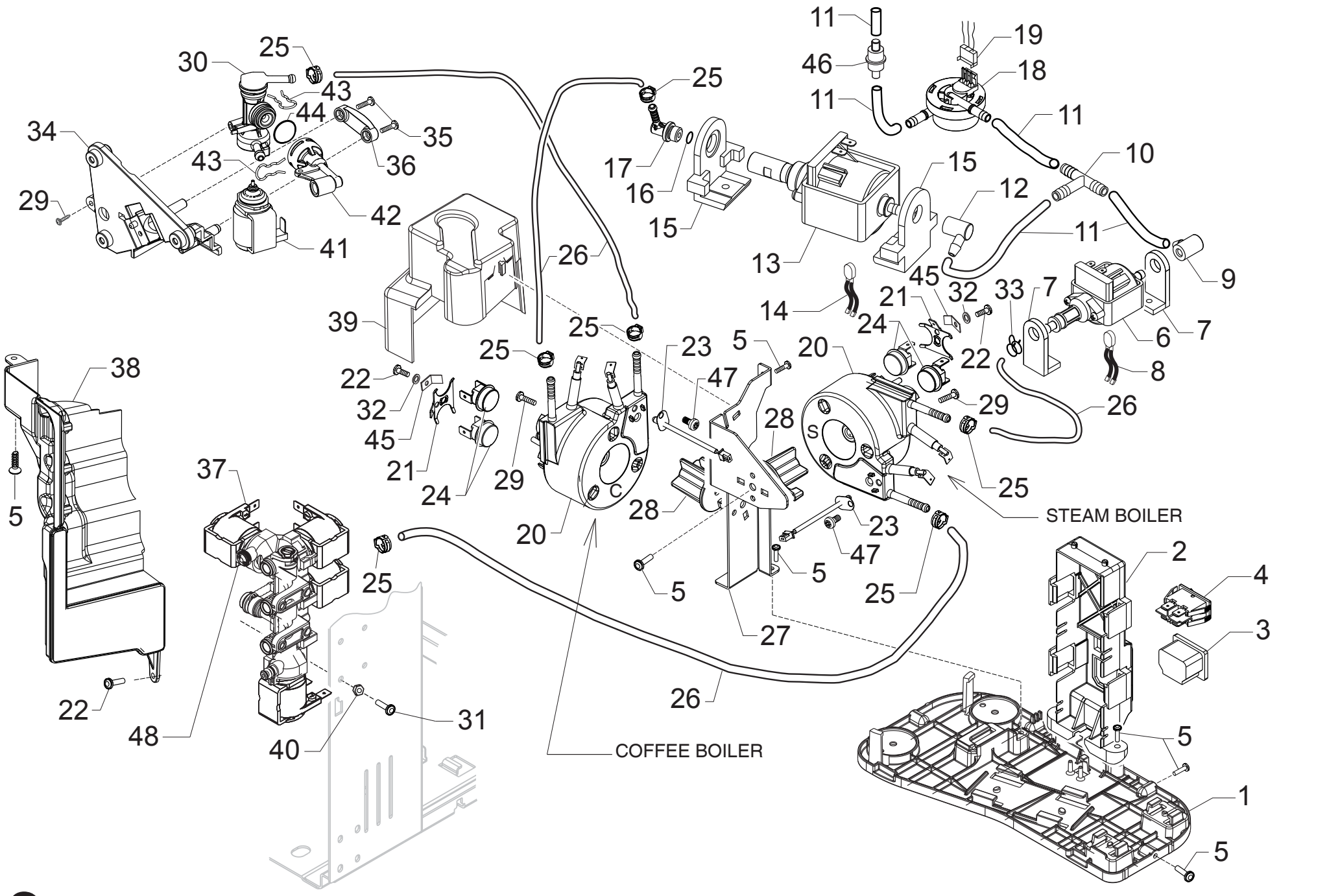

Saeco INTERNATIONAL GROUP

HD8953/01-09-11-19
HD8954/01-09-47

CE **Cod.10004414-4415-4365-4366**
Cod.10004367-68-882895447540

POS	CODE	12NC	DESCRIPTION	NOTE
01	11012205	996530006316	BLACK COMPONENTS SUPPORT MYB9	
02	11012412	996530006399	BLACK SOCKET-SWITCH SUPPORT MYB9	
	11023406	996530007626	BLACK SOCKET-SWITCH SUPPORT MYB9 UL	UL
03	12001883	996530072437	CUP SOCKET V3 EN 60320 C 13	
	12001645	996530069782	CUP SOCKET V2 EN 60320 C 13	UL
04	NE03.038	996530058836	BIPOLAR SWITCH FUSIT C1250AR	
05	12000450	996530007819	SCREW TCBR TORX 10 3,5X12 PLAST.ZN-N	
06	12001212	996530008003	ULKA PUMP MF 230V-50HZ	230V-50HZ
	12001346	996530008028	ULKA PUMP MF 120V-60HZ	120V-60HZ
07	11012194	996530006315	BLACK/SBR ULKA MF PUMP SUPPORT	
08	11013116	996530006631	2POLES CONNECTOR STEAM PUMP MYB9 UL	
09	11012193	996530006314	90° INLET CONNECTOR FOR PUMP ULKA MF	
10	147920300	996530017351	TRANS.CONNECTOR D=8 ART.80.26.047 KA.461	
11	JS01.022	996530057357	SILICONE TUBE 5X10 60SH	IN ROLL
12	147920150	996530017348	90° INLET PUMP CONNECTOR	
13	12000140	996530007753	ULKA PUMP EP5/S GW	230V-50HZ
	12000142	996530007754	ULKA PUMP EAP5/S 120V-60HZ	120V-60HZ
14	11013076	996530006607	2POLES CONNECTOR COFFEE PUMP MYB9 UL	
15	11022857	996530007468	BLACK PUMP SUPPORT GMYB	
16	140321961	996530013471	O-RING 2031 TERMOIL	
17	11001054	996530000624	BLK PUMP OUTLET 90°CONNECTOR P0049/B	
18	12000781	996530007887	TURBINE D=1,2 932-8521/90 ASSY.	
19	11013122	996530006635	6POLES CONNECTOR FLOWMETER MYB9 UL	
20	11013735	996530006841	SLIM TUB.BOILER ASSY.	230V-1300W
	11023153	996530007586	SLIM TUB.BOILER 1300W 120V ASSY.	120V-1300W
21	11001751	996530000997	TUB.BOILER V3 UPPER THERM.FIXING SPRING	
22	129573402	996530012923	SCREW TAPT M4X10 DIN 7985 GALV	
23	190800100	996530026997	TEMPERATURE SENSOR NTC UL L=280MM	
24	12001033	996530007973	THERMOSTAT ONE SHOT 190°	
			UP TO S/N TU901318072649	
	-	421940812991	KIT SPARES COFFEE BOILER THERMOSTATS	COFFEE BOILER
			FROM S/N TU901318072650	
	-	421940813001	KIT SPARES STEAM BOILER THERMOSTATS	STEAM BOILER
			FROM S/N TU901318072650	
25	12000892	996530007947	OETIKER CLAMP D=9,5 16700004	
26	16000380	996530009505	5X8,9 SILICONE TUBE	IN ROLL
27	17000143	996530067888	STEEL SLIM TUB.BOILER SUPPORT MYB9	
28	11023282	996530007608	BLACK SLIM TUB.BOILERS SUPPORT MYB9	
29	12001369	996530008039	SCREW TSP TORX 10 5X35 PLAST.SS	
30	20006558	996530010201	BLOWDOWN VALVE CASING MYB9 ASSY.	

POS	CODE	12NC	DESCRIPTION	NOTE
31	129914302	996530013168	SCREW TORX M4X10 TESTA D=8X1,5 GALV	
32	128310402	996530012341	GALV.WASHER UNI 8842 A4	
33	184320200	996530025907	SPRING HOSE CLAMP D=9,5MM	
34	11012206	996530006317	BLACK BLOWDOWN VALVE SUPPORT MYB9	
35	129913902	996530013164	SCREW TCB TORX 10 3X12 PLAST.ZN-B	
36	11013711	996530006834	BLACK VALVE FIXING FLANGE MYB9	
37	11031553	996530073381	DIFFUSER VALVE MYBE ASSY.	
38	11013528	996530006802	BLACK DIFFUSER PROTECT.VALVE MYB9 ASSY.	
39	17000042	996530067913	BLK COFF.BOILER INSULATING COVER MYB9/P	
40	U302.003	996530062065	GALV.NUT HEXAGONAL M4 UNI 5588	
41	20000590	996530009859	BLOWDOWN VALVE COIL P0049 ASSY.	230V
	20000680	996530009874	BLOWDOWN VALVE COIL P0049 120V ASSY.	120V
42	11007565	996530004421	BLACK BLOWDOWN VALVE CONNECTOR V2 P0049	
43	11005096	996530002744	SS FORK SPRING FOR BLOWDOWN VALVE P0049	
44	12000620	996530007856	OR ORM 0130-20 EPDM	
45	124390520	996530011326	BRASS BENT FASTON 45° 6,3X0,8	
46	144650300	996530015428	ASPIRATION FILTER GAUZE NET 500 (NEW)	
47	12001715	996530069758	SCREW TCB TORX 20 M4X8 AUTOFORMING ZN-B	
48	11013825	996530006868	BLACK MILK-AIR FLOW SELECTOR MYB9	
	11006995	996530003974	BLOWDOWN VALVE V2 MYB9 ASSY.	230V
			WITH PART. N°30-41-42-43-44	
	11022038	996530007215	BLOWDOWN VALVE V2 MYB9 120V ASSY.	120V
			WITH PART. N°30-41-42-43-44	
	11026313	996530067955	SLIM TUB.BOIL.C2 T190°-190° AS	230V-1300W
			WITH PART. N°20-21-22-23-24-32-45	
			UP TO S/N TU901318072649	
	-	421941302131	SLIM TUB.BOIL.C2 T150-204 1300W 230V AS	230V-1300W
			WITH PART. N°20-21-22-23-24-32-45	
			FROM S/N TU901318072650	
	-	421941302101	SLIM TUB.BOIL.C2 T170-204 1300W 230V AS	230V-1300W
			WITH PART. N°20-21-22-23-24-32-45	
			FROM S/N TU901318072650	
	-	421941302141	SLIM TUB.BOIL.C2 T150-204 1300W 120V AS	120V-1300W
			WITH PART. N°20-21-22-23-24-32-45	
	-	421941302111	SLIM TUB.BOIL.C2 T170-204 1300W 120V AS	120V-1300W
			WITH PART. N°20-21-22-23-24-32-45	

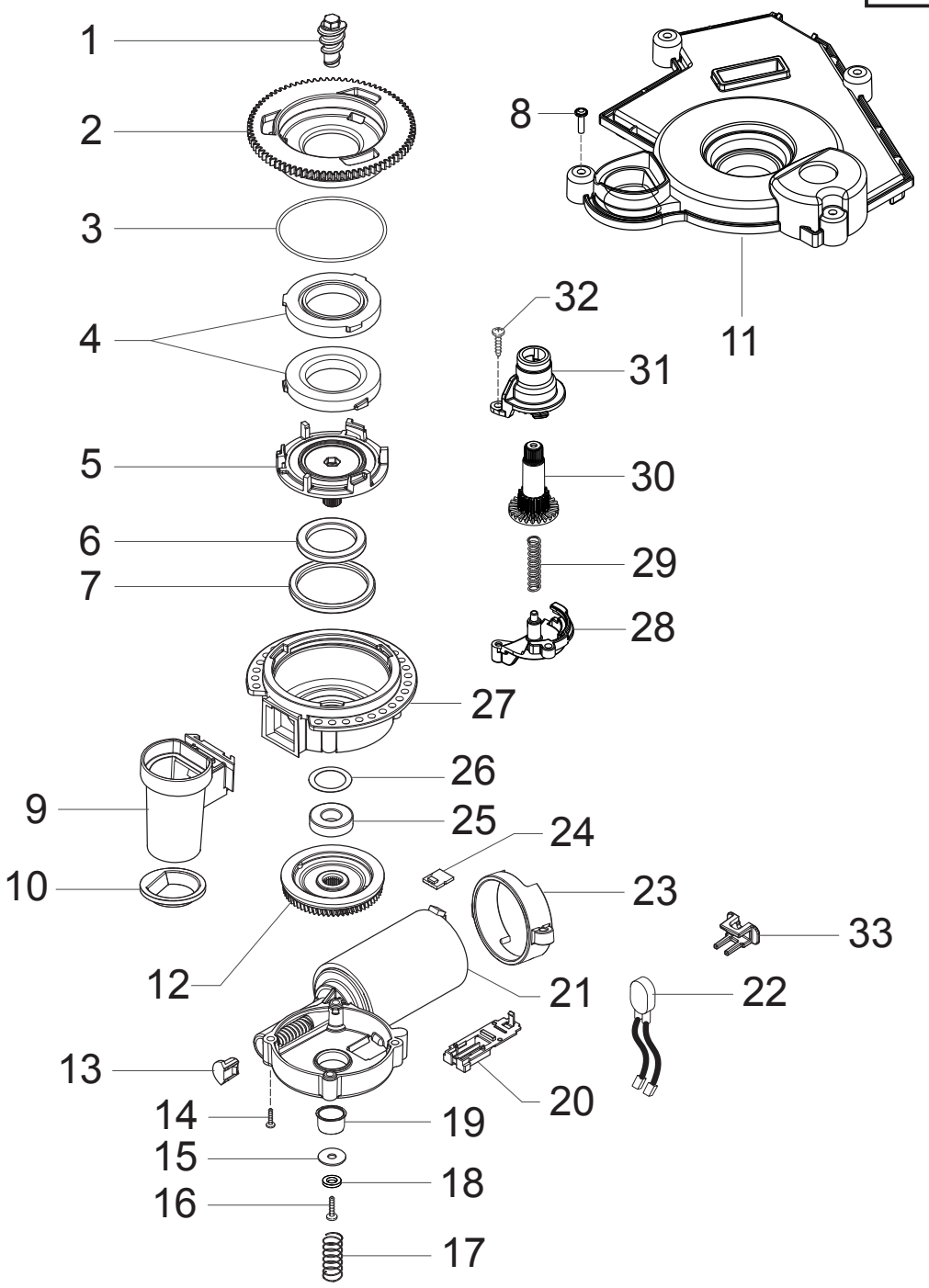

Saeco INTERNATIONAL GROUP

HD8953/01-09-11-19
HD8954/01-09-47

CE **Cod.10004414-4415-4365-4366**
Cod.10004367-68-882895447540

POS	CODE	12NC	DESCRIPTION	NOTE
01	11011205	996530005991	TEA ZAMA INCREASE SCREW GRINDER	
02	-	421941094152	BLK COF.GRINDER UPPER GRINDER SUPPORT V2	
03	140328960	996530013577	OR ORM 0530-15 NBR FDA	
04	146520100	996530016342	BAKED CLAY GRINDER 48X28	
05	149198350	996530017952	BLK LOWER COFFEEGRINDER GRINDER SUPPORT	
06	123030300	996530011183	AXIAL BEARING EKKO 342.35252	
07	140360500	996530013597	FELT RING 45,4X39,4X4	
08	12000450	996530007819	SCREW TCBR TORX 10 3,5X12 PLAST.ZN-N	
09	11026355	996530068049	BLK GROUND COFF.OUTLET CONVEYOR V4 ASSY.	
10	11030459	996530072511	GRY GROUND COFFEE CONT.LOWER SEAL SMART1	
11	11012856	996530006555	COFFEE GRINDER SOUNDPROOFING COVER MYB9	
12	226000300	996530029609	GEAR SX Z=38 FOR GRINDER MOTION ASSY.	
13	149214800	996530018139	MC V3 MOD=1,25 WORM SCREW CENTRING CAP	
14	129661702	996530012992	SCREW TCB TORX 3,5X30 PLAST.ZN-B	
15	128381902	996530012375	STEEL FLAT WASHER DI=4,3 DE=14 SP=1,5	
16	129574802	996530012928	SCREW TCB TORX 20 M4X30 ZN-B	
17	11000597	996530000376	STEEL COF.GRINDER SUPPORT SPRING P124	
18	128310402	996530012341	GALV.WASHER UNI 8842 A4	
19	11002873	996530001389	INSULATOR BUSH FOR GRINDER MOTOR P124	
20	149199050	996530017963	BLK SENSOR SUPPORT FOR COF.GRINDER MOTOR	
21	11000513	996530000317	MOTOR COFFEEGRINDER V3.1 230V ASSY.	230V
	11000511	996530000315	MOTOR COFFEEGRINDER V3.1 120V ASSY.	120V
22	11013079	996530006611	2POLES CONNECTOR GRINDER MOTOR MYB9 UL	
23	11000194	996530000115	BLACK COFFEEGRINDER MOTOR SUPPORT P124	
24	181540900	996530022784	ELECTR.BOARD WITH SENSOR HAL506 SF-K	
25	123030200	996530011182	RADIAL BEARING 61900.2RS1	
26	128381800	996530012374	STEEL CRINKLE WASHER 21,8X14X0,25	
27	142905450	996530015258	BLK UPPER BODY WITH COFFEE GROUND OUTLET	
28	149199850	996530017976	LOWER GEAR SUPPORT COFFEEGRINDER SMART	
29	126772918	996530011715	SPRING FOR ADJUSTMENT GRINDING GEAR	
30	146002150	996530016264	COFFEE GRINDING ADJUSTMENT GEAR SMART	
31	149199750	996530017975	UPPER GEAR SUPPORT COFFEEGRINDER SMART	
32	129914002	996530013165	SCREW TCB TORX 10 3,5X16 PLAST.ZN-B	
33	17001921	996530072477	BLK WIRING FIX INSERT FOR GRINDER BOARD	
	11013147	996530006652	GEN.MOTOR COFFEE GRINDER MYB9 230V ASSY.	230V
	11022036	996530007214	GEN.COF.GRINDER MOTOR MYB9 120V ASSY.	120V

POS	CODE	12NC	DESCRIPTION	NOTE

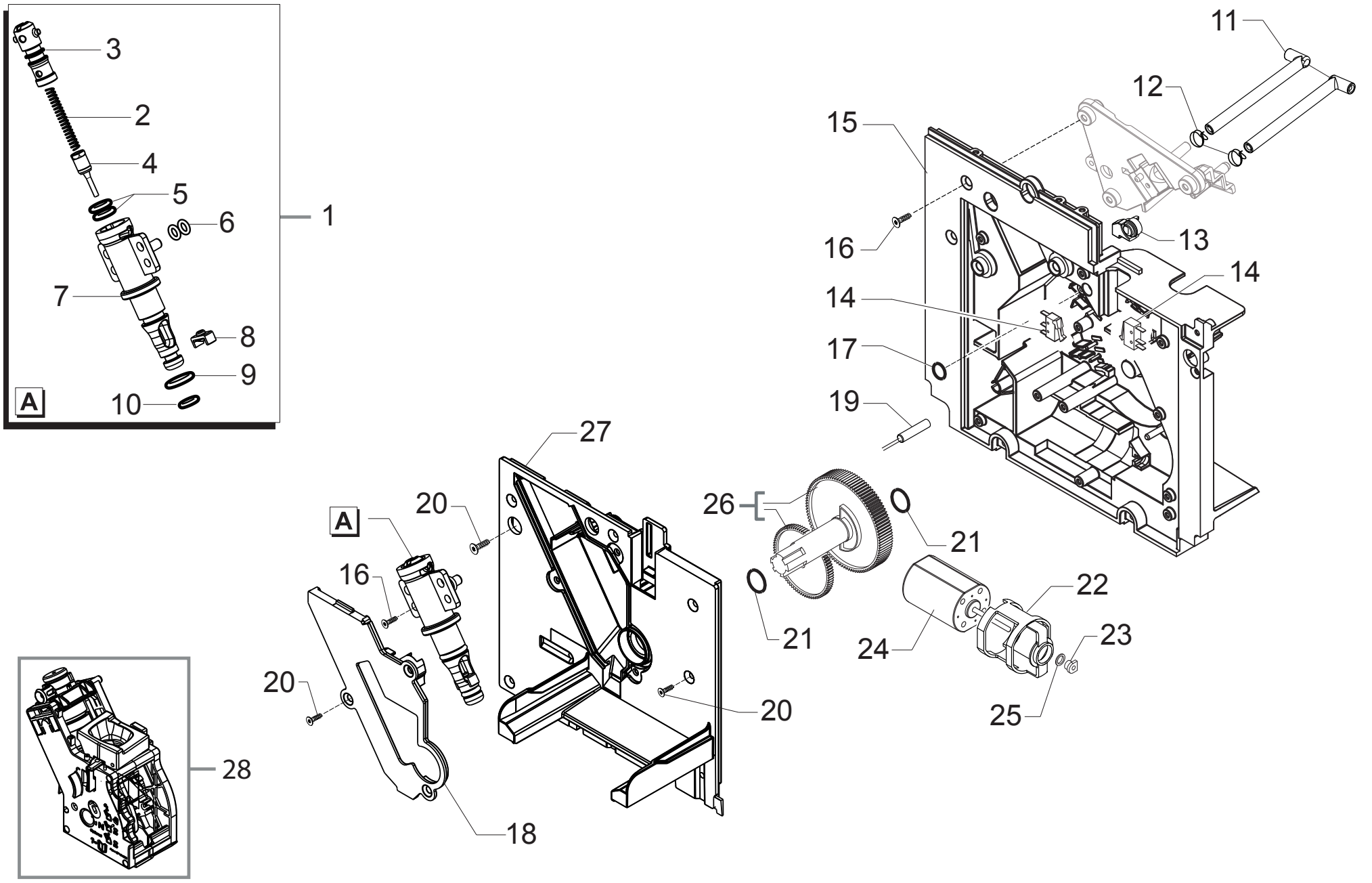

Saeco INTERNATIONAL GROUP

HD8953/01-09-11-19
HD8954/01-09-47

CE **Cod.10004414-4415-4365-4366**
Cod.10004367-68-882895447540

POS	CODE	12NC	DESCRIPTION	NOTE
01	11005060	996530002717	PIN V2 FOR BOILER P119 ASSY.	
02	9011.132	996530048874	SS SPRING FOR PIN	
03	11003820	996530001932	BLACK CAP V2 FOR PIN BOILER P119	
04	11009019	996530005183	TEA/BRASS PISTON L=20,9 ASSY.	
05	140324459	996530013508	OR ORM 0060-20 SILICONE PTFE/FDA	
06	140328059	996530013564	OR 2015 SILICONE PTFE/FDA	
07	11003801	996530001926	NAT.PIN V2 FOR BOILER P119	
08	11005099	996530002747	NATURAL CURSOR V2 FOR BOILER P119	
09	NM01.035	996530059399	OR ORM 0090-20 SILICONE	
10	NM01.057	996530059419	OR ORM 0050-20 IN SILICONE	
11	11012337	996530006375	WATER DRAIN CONNECTOR MYB9	
12	NV99.087	996530059836	BAND D=11/11,6	
13	11013514	996530006796	BLACK MOUNTING PLATE COVER SEAL MYB9	
14	NE05.038	996530058869	MICROSWITCH SAIA XCG5-81-P5	
15	11030108	996530072933	BLK MOUNTING PLATE WITH PIN V2 P119 ASSY	
16	12000450	996530007819	SCREW TCBR TORX 10 3,5X12 PLAST.ZN-N	
17	140325462	996530013526	OR ORM 0070-20 SILICONE	
18	142856550	996530015064	BLACK COVER FOR BOILER VAIN P119	
19	11003661	996530001819	REED SENSOR MK3-1A66-BV16451	
20	12001860	996530072411	SCREW TSP TORX 10 3,5X14 PLAST.SS	
21	9161.132	996530050569	MYLAR WASHER FOR RATIOMOTOR	
22	9121.044	996530049896	ANTIVIBRATION FOR MOTOR	
23	9121.046	996530049898	BRONZE SINTERED BUSH FOR MOTOR RATIOMOT.	
24	11005214	996530002796	MOTOR FOR RATIOMOTOR P124 ASSY.	
25	148380200	996530017424	BAKELIZZATE WASHER D=5,5	
26	20000900	996530009913	SPARES KIT GEARS FOR RATIOMOTOR V2	
27	11013513	996530006795	BLACK MOUNTING PLATE COVER MYB9	
28	11012810	996530006525	BLACK BREW UNIT 8GR.SBS MYB9	

POS	CODE	12NC	DESCRIPTION	NOTE

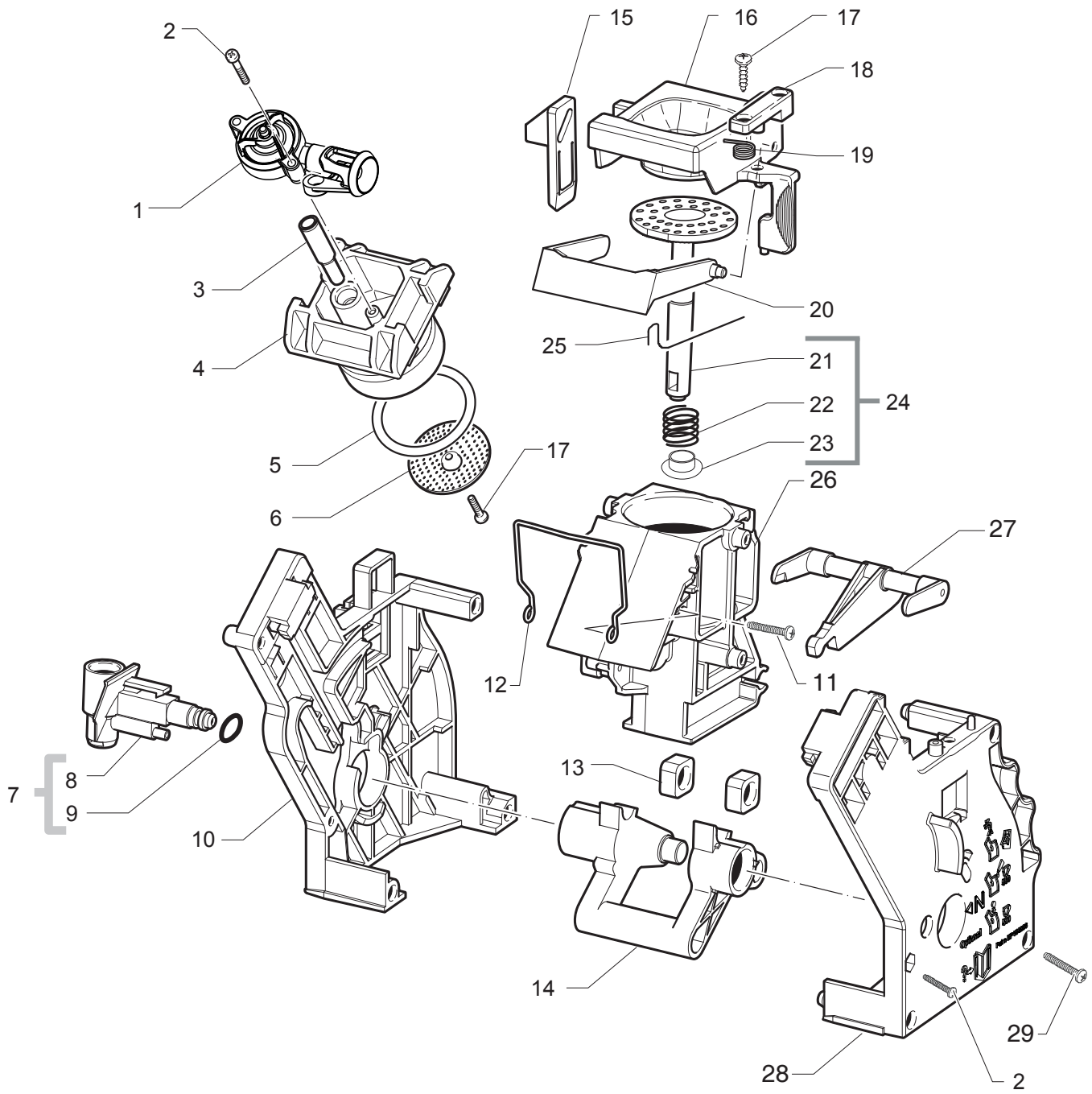

Saeco INTERNATIONAL GROUP

HD8953/01-09-11-19
HD8954/01-09-47

CE **Cod.10004414-4415-4365-4366**
Cod.10004367-68-882895447540

POS	CODE	12NC	DESCRIPTION	NOTE
01	11002154	996530001192	SBS VALVE P124 ASSY.	
02	12000550	996530007838	SCREW TCB TORX 10 3X25 PLAST.SS	
03	11009276	996530005372	BLK COUNTER PISTON TUBE BREW UNIT S0053	
04	11001840	996530001046	BLACK COUNTER PISTON BREW UNIT 8GR.P124	
05	NM01.044	996530059406	OR ORM 0320-40 SILICONE PTFE/FDA	
06	9161.268	996530050709	PERCOLATOR DE=35,8 ELFO	
07	20000440	996530009825	BLACK WATER INLET SLEEVE BREW UNIT ASSY.	
08	9161.064.050	996530050488	BLACK WATER INLET SLEEVE BREW UNIT ROYAL	
09	NM02.007	996530059441	OR 2025 IN TERMOIL	
10	9161.375.050	996530050832	BLACK BREW UNIT REAR PLATE SMART	
11	129912521	996530013148	SCREW TCBR TORX 10 3,5X14 PLAST.SS	
12	11001556	996530000898	SS BREW UNIT SPRING H=49 SMART	
13	9161.094.050	996530050539	BLACK BREW UNIT DRILLED BLOCK	
14	9161.066.050	996530050492	BLACK BREW UNIT ELBOW SHAFT M5000	
15	9161.373.050	996530050827	BLACK BREW UNIT COUPLING PLATE SMART	
16	149261350	996530018241	BLACK HOPPER DOSER BREW UNIT SMART1	
17	12000895	996530007951	SCREW TSP TORX 10 3X10 PLAST.SS	
18	9161.374.050	996530050829	BLK BREWUNIT HOPPER BLOCKING PLATE SMART	
19	9161.378	996530050838	SS HOPPER SPRING FOR BREW UNIT SMART	
20	11004161	996530002096	BLACK SCRAPER FOR BREW UNIT M5000	
21	11003077	996530001451	BLK BREW UNIT INTEGRAL PISTON 8GR.ASSY.	
22	9161.198	996530050627	SS.8GR.BREW UNIT PISTON SPRING	
23	9161.191	996530050618	WHITE 8GR.-12GR.BREW UNIT PISTON BUSH	
24	11023086	996530007577	BLK 8GR.BREW UNIT NTEGR.PISTON GEN.ASSY.	
25	9161.046	996530050455	SS SCRAPER SPRING FOR BREW UNIT	
26	11003075	996530001448	BLACK COFFEE CONTAINER BREW UNIT P124	
27	11003078	996530001452	BLACK CONNECTING ROD BREW UNIT 8GR.	
28	11005920	996530003228	BLACK BREW UNIT FRONT PLATE S/SCR.SMART	
29	12000897	996530007953	SCREW TCB TORX 10 3,5X20 PLAST.SS	

POS	CODE	12NC	DESCRIPTION	NOTE