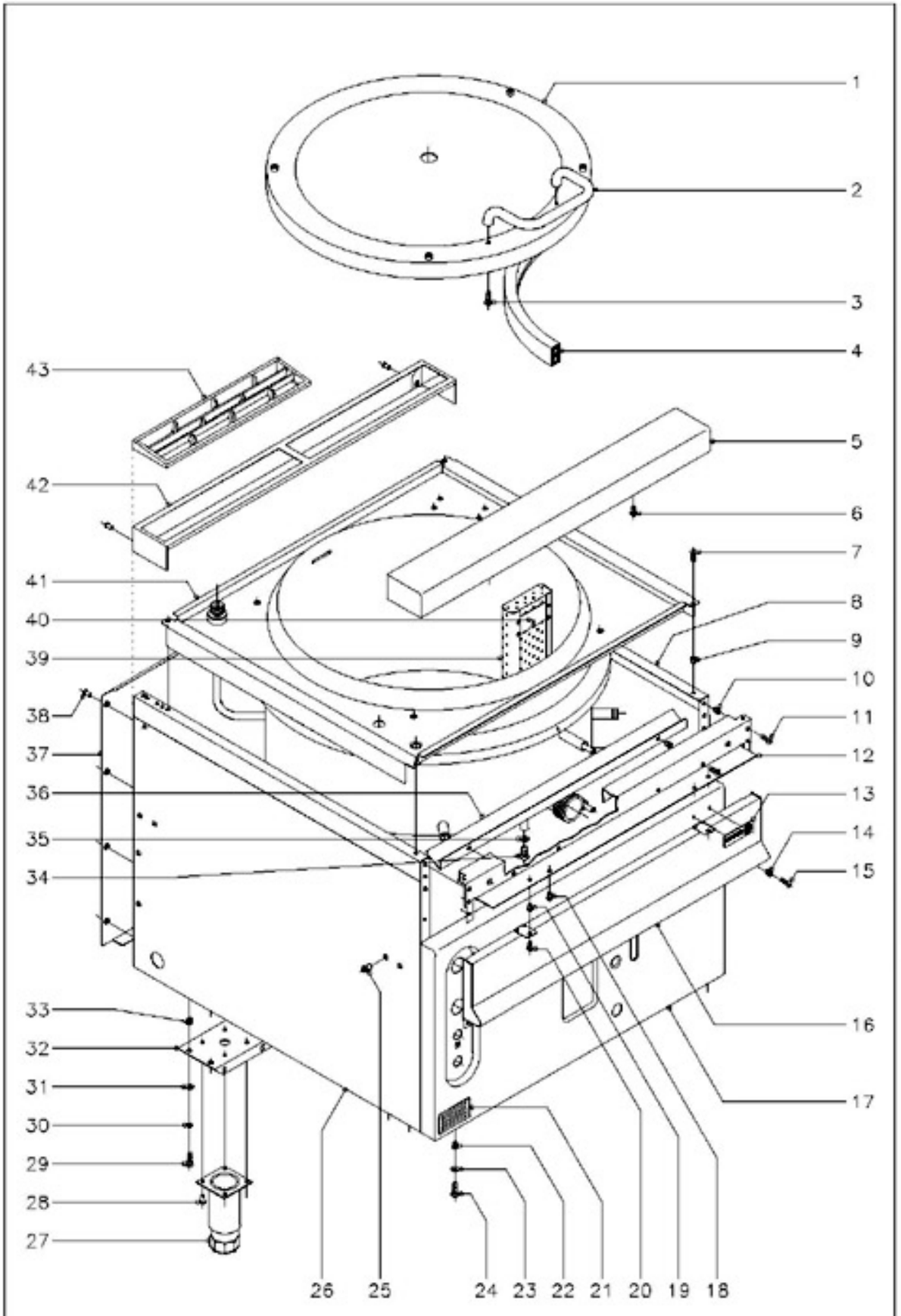

1	S056137
2	S036123
3	Q012053
4	S056109
5	R165431
6	Q152004
7	Q152004
8	X162811
8	X192805
8	S372812
9	Q221342
10	Q221342
11	Q152004
12	R162613
13	U262806
	Q221023
14	Q221342
15	Q152004
16	S032806
17	S022801
17	S072805
17	S042805
18	Q221342
19	Q221342
20	Q152004
21	S326540
22	Q221343
23	Q302022
24	Q012042

25	Q221343
26	X162810
26	X192803
26	S372810
27	X260150
28	Q411304
29	Q012042
30	Q262040
31	Q302022
32	S032631
33	Q221343
34	Q012063
35	Q304003
36	S032645
	Q221342
	Q152004
37	U562853
37	X242817
37	S372816
38	Q419005
39	S016145
39	S036145
40	S036117
	Q412000
41	S446101
41	S406100
42	R205428
	Q419005
43	R205425

N. plano	Firma	Fecha	Aparato	Lamina	
C-943		1-01	MARMITAS MPG9-10 Y 15 BM	1	Fagor Industrial S.Coop. FAGOR

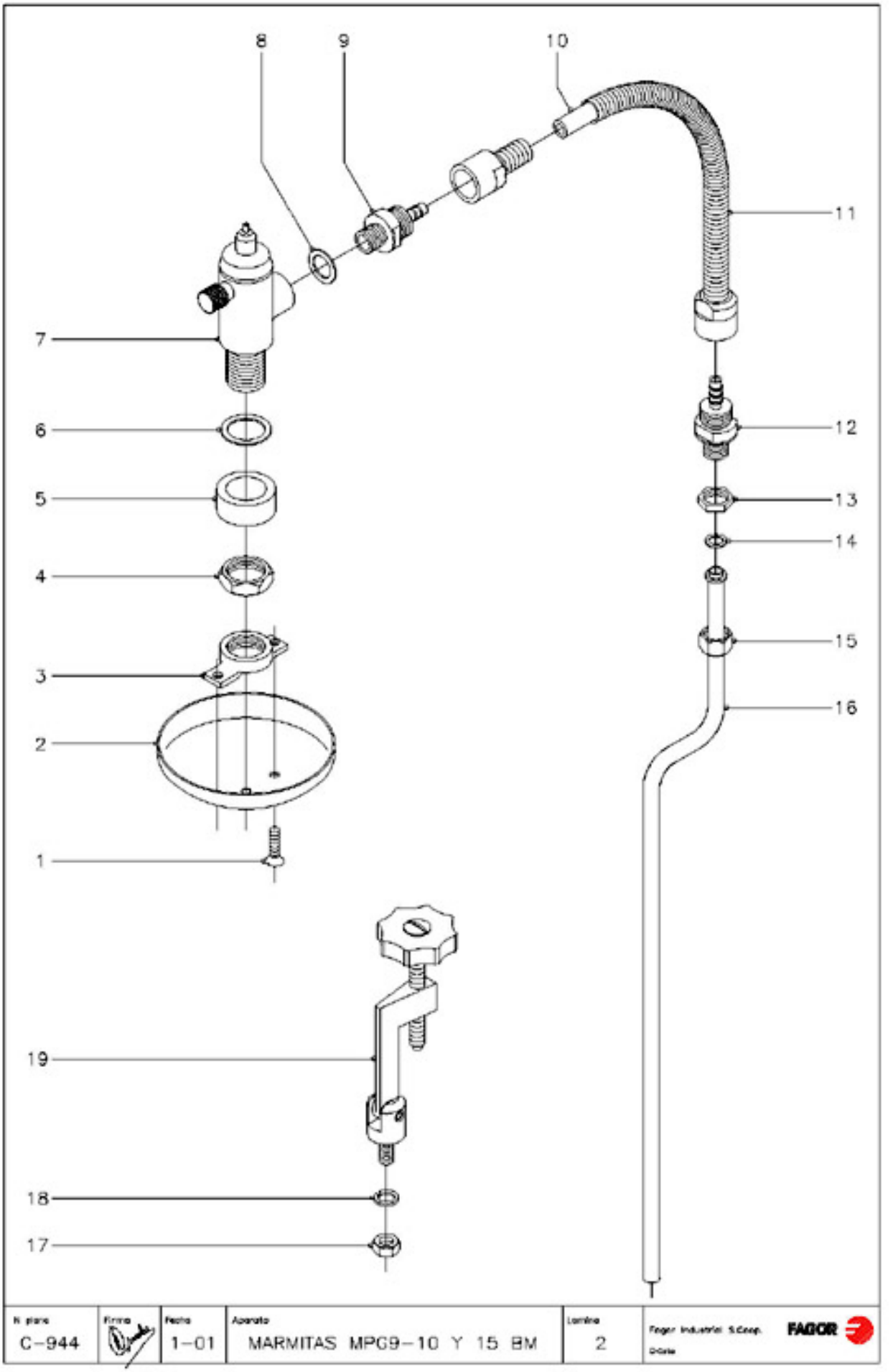

1	Q152024
2	S102116
3	S102115
4	Q223014
5	S102114
6	Q306037
7	S102101
8	Q306038
9	S102122
10	3676900
11	S052102
12	S102122
13	Q221302
14	Q306024
15	Q223010
16	S135000
17	Q162070
18	Q261570
19	S052101

N. plano	Firma	Fecha	Aparato	Lamina	
C-944		1-01	MARMITAS MPG9-10 Y 15 BM	2	Fagor Industrial S.Coop. FAGOR

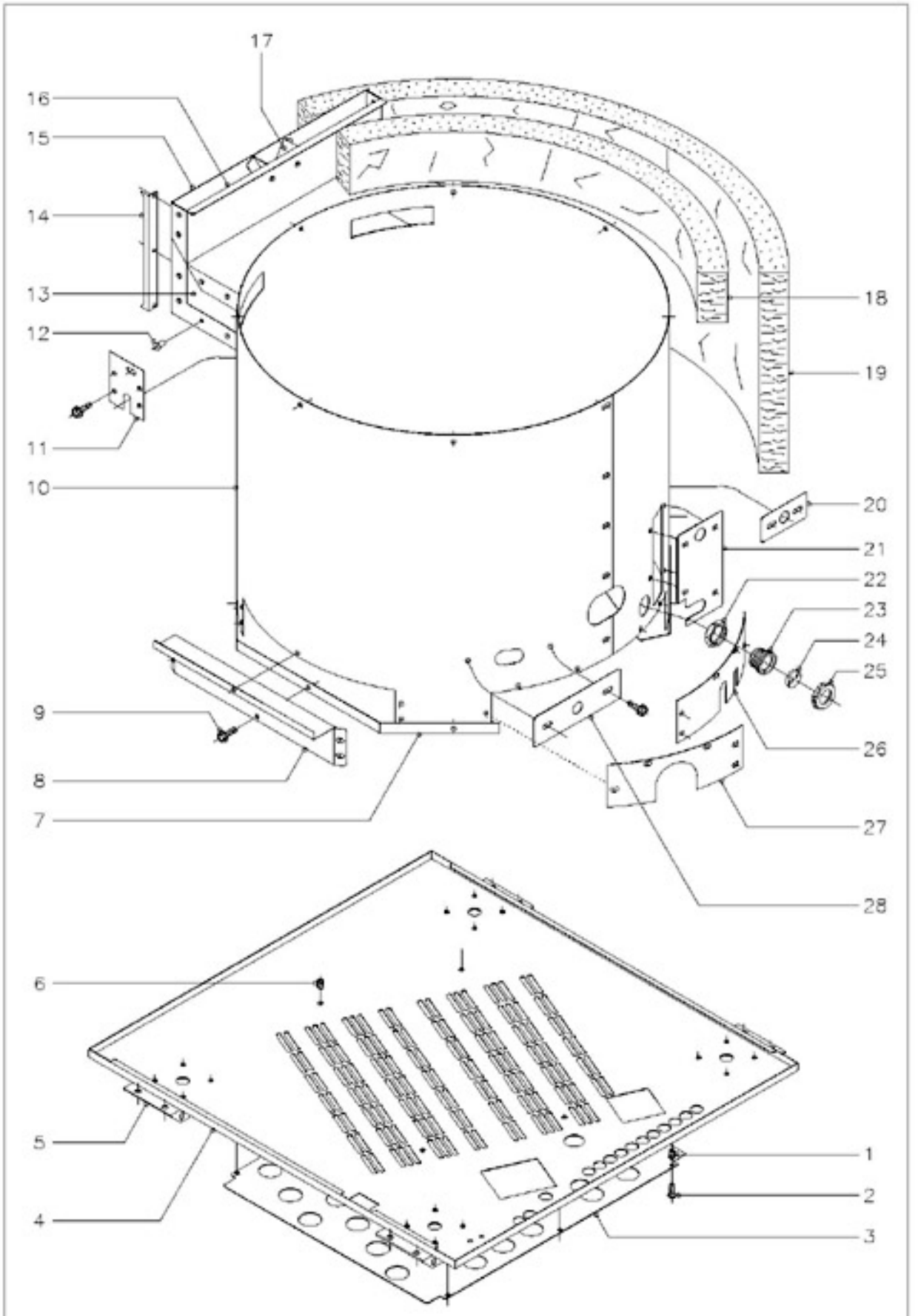

1	Q221342
2	Q152004
3	S272610
4	S272606
4	S062811
4	S372814
5	S032631
6	Q221342
7	S042625
8	S272609
8	S072607
9	Q151323
10	S022615
10	S072606
10	S042627
11	S042615
12	Q419005
13	S042631
14	X162657
15	S042628
16	S042629
17	S035400
18	S116403
19	R092622
20	S042640
21	S022619
21	S042632
22	Q223014
23	9294500
24	9294600
25	9294400
26	S022617
26	S272607
27	S272608
28	S042644

N plano	Firma	Fecha	Aparato	Lamina	
C-945		1-01	MARMITAS MPG9-10 Y 15 BM	3	Fagor Industrial S.Coop. Oñate FAGOR

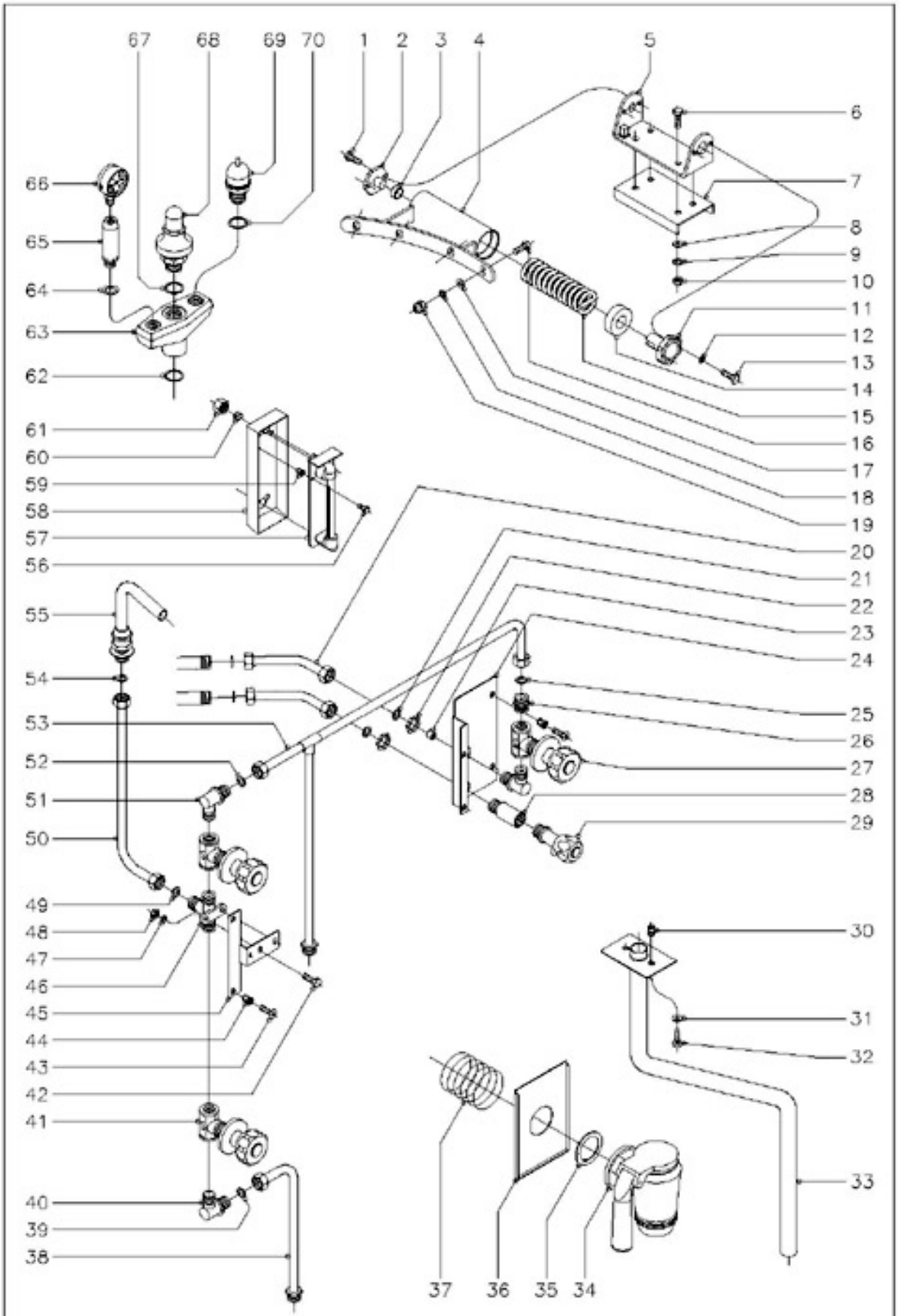

1	Q012041
2	S116119
3	S116126
4	S036143
5	S036131
6	Q012055
7	S036122
8	Q232050
9	Q262050
10	Q162050
11	S116120
12	Q262040
13	Q012042
14	S116118
15	S116121
16	Q012053
17	Q232050
18	Q262050
19	Q212051
20	S025006
20	S045004
21	Q306024
22	Q221302
23	S225012
24	S092601
	Q221342
	Q152004
25	Q306024
26	S205023
27	S112154
28	S045006
29	S022104
30	Q221342
31	Q262030
32	Q012032
33	S036119
33	S065004
34	S112150
35	S112152
36	S112803
37	S112105
38	S035036

38	S065020
38	S375007
39	Q306024
40	S115013
41	S112151
42	Q012042
43	Q152004
44	Q221342
45	S032640
46	S205022
47	Q262040
48	Q162040
49	Q306024
50	S035032
51	S115013
52	Q306024
53	S045015
53	S075010
53	S375005
54	Q306024
55	S052100
56	Q012021
57	S082100
58	S292600
59	Q221341
60	U265008
61	S082101
62	Q306049
63	S022100
64	Q306039
65	S022102
66	9220815
67	Q306049
68	S022101
69	S022103
70	Q306049

N. plano	Firma	Fecha	Aparato	Lamina	
C-946		1-01	MARMITAS MPG9-10 Y 15 BM	4	Fagor Industrial S.Coop. FAGOR

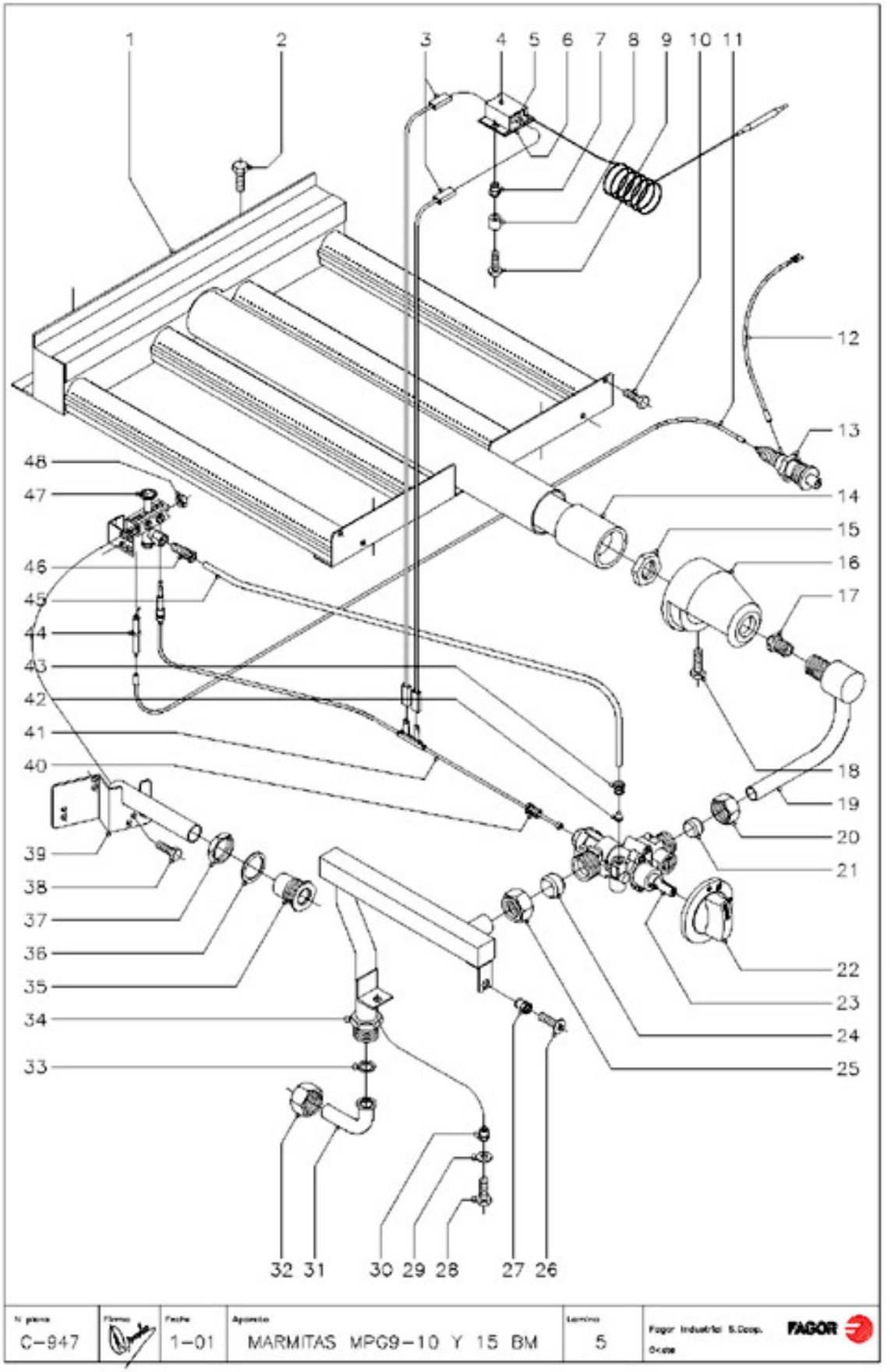

1	S275705
2	Q012031
3	S223002
4	X353007
5	X033001
6	X353015
7	Q221341
8	U813000
9	Q151320
10	Q012031
11	U323030
12	U333003
13	S113034
14	S135733
15	Q221302
16	0628100
17	S012400
17	S032400
17	S012401
17	S114401
17	S012402
17	S032401
18	Q012043
19	S025010
19	S045025
20	S312105
21	S312106
22	S312110
23	S312101

24	S312104
25	S312103
26	Q152004
27	Q221342
28	Q012042
29	Q302022
30	Q221343
31	U565007
32	U725006
33	Q306052
34	S035030
34	S065016
34	S375002
35	S112804
36	Q306027
37	Q221324
38	Q012041
39	S045028
40	U264301
41	X022130
42	X205028
43	S312107
44	X012101
45	S015012
45	S045027
46	U134323
47	R202100
	U442138
	U442137
48	Q162040

		BUTANO-PROPANO
17	S012400	Tobera Ø 2,20
17	S032400	Tobera Ø 2,45
	U442138	Inyector piloto Ø 0,25
	U136501	Indicador (butano-propano)
		GAS NATURAL
17	S012401	Tobera Ø 3,10
17	S114401	Tobera Ø 3,65
	U442137	Inyector piloto Ø 0,40
	U134402	Indicador (gas natural)
		GAS VILLA
17	S012402	Tobera Ø 5,90
17	S032401	Tobera Ø 6,90
	U442138	Inyector piloto Ø 0,25
	U134310	Indicador (gas villa)

N plano	Firmas	Fecha	Asunto	Lamina	Fagor Industrial S.Coop.
C-947		1-01	MARMITAS MPG9-10 Y 15 BM	5	FAGOR