DESPIECES DEL SERVICIO TECNICO

# Mesas Frías Gastronorm
# Tables Froides Gastronorm
# Gastronorm Refrigerated Counters
# Gastronorm Kühltische
# Tavoli Refrigerati Gastronorm

## MFP / MFN
## MCP / MCN

FEBRERO 2002

FAGOR

Fagor Industrial

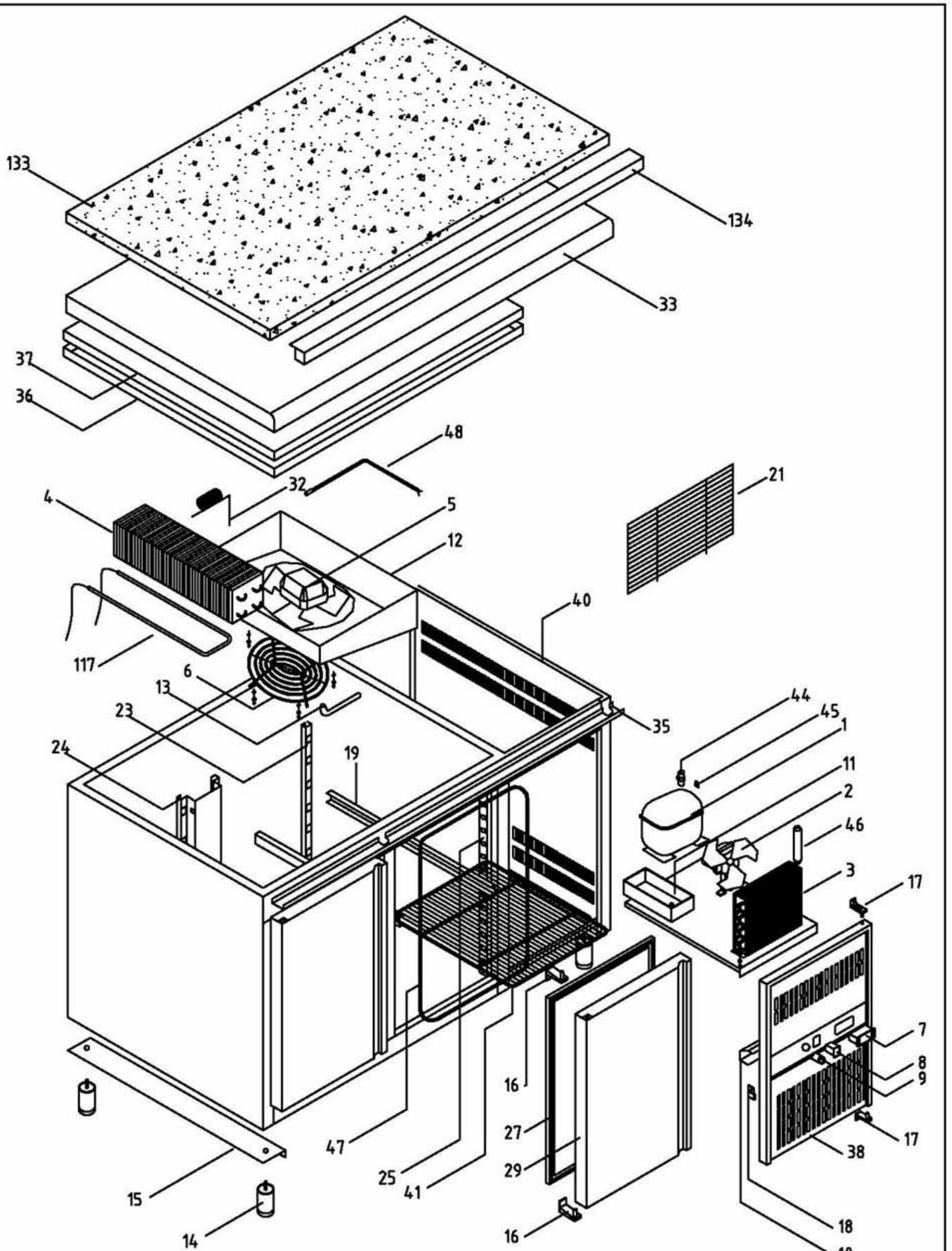


COMÚN A

Mesas Frias GN 1/1 y Pastelería 400x600, refrigeración y mantenimiento de congelados

Mesas Frias GN 1/1 y Pastelería 400x600, refrigeración y mantenimiento de congelados, centrales y murales

| | Firma | Fecha |
|---|---|---|
| Dibujado | M. Mellado | 28/02/01 |
| Proyectado | | |
| Comprobado | | |

# DESPIECE MESAS FRIAS

Código

DSP0143

FAGOR

FAGOFRI s.a.

FAGOR
FAGOFRI SA

## PLANO DESPIECE

| | FAGOFRI Código | MATERIAL | MODELO | DSP-0143 MFP-135-GN | DSP-0143 MFP-180-GN | DSP-0143 MFP-225-GN | DSP-0143 MFP-270-GN | DSP-0143 MCP-135-GN | DSP-0143 MCP-180-GN | DSP-0143 MCP-225-GN | DSP-0143 MCP-270-GN | DSP-0160 C GN-2x1/2 | DSP-0161 C GN-3x1/3 | DSP-0162 C GN-1/3+2/3 |
|---|---|---|---|---|---|---|---|---|---|---|---|---|---|---|
| | | | | 1 | 1 | 1 | 1 | 1 | 1 | 1 | 1 | 1 | 1 | 1 |
| 1 | 6001700003 | Compresor, Danfoss FR-7,5-G | | 1 | | | | 1 | | | | | | |
| 1 | 6001700004 | Compresor, Danfoss FR-8,5-G | | | 1 | 1 | | | 1 | 1 | | | | |
| 1 | 6001700007 | Compresor, Danfoss SC-12-G | | | | | 1 | | | | 1 | | | |
| 2 | 6001506002 | Ventilador unidad condensadora, 10 w con pala y pata | | 1 | 1 | 1 | 1 | 1 | 1 | 1 | 1 | | | |
| 3 | 6001911002 | Condensador, 9x2 derecha techo | | 1 | 1 | 1 | | 1 | 1 | 1 | | | | |
| 3 | 6001911003 | Condensador, 9x3 derecha techo | | | | | 1 | | | | 1 | | | |
| 4 | 6001902001 | Evaporador tiro forzado, B 5T 4R 330A 4S | | 1 | 1 | 1 | | 1 | 1 | 1 | | | | |
| 4 | 6001902002 | Evaporador tiro forzado, B 8T 4R 330A 4S MESA FRIA | | | | | 1 | | | | 1 | | | |
| 5 | 6001506001 | Ventilador Evaporador, 5 w con pala y aro | | 1 | 1 | 1 | 1 | 1 | 1 | 1 | 1 | | | |
| 6 | 6000202216 | Rejilla protección ventilador evaporador, Plastico inyectado | | 1 | 1 | 1 | 1 | 1 | 1 | 1 | 1 | | | |
| 7 | 6001507045 | Control digital refrigeración, CAREL IR32SE0000 con sonda y transformador | | 1 | 1 | 1 | 1 | 1 | 1 | 1 | 1 | | | |
| 7 | 6001507046 | Control digital refrigeración, CAREL PJ32SOPOOK con sondas | | 1 | 1 | 1 | 1 | 1 | 1 | 1 | 1 | | | |
| 7 | 6001507039 | Control digital refrigeración, ELIWELL EWDC 112 con sonda | | 1 | 1 | 1 | 1 | 1 | 1 | 1 | 1 | | | |
| 7 | 6001507002 | Control digital refrigeración, ELIWELL EWPC 961 N con sonda y transformador | | 1 | 1 | 1 | 1 | 1 | 1 | 1 | 1 | | | |
| 8 | 6001507003 | Interruptor general on / off, BIPOLAR N/ABMAR 220 V. IB4-3106 | | 1 | 1 | 1 | 1 | 1 | 1 | 1 | 1 | | | |
| 9 | 6001507005 | Piloto funcionamiento compresor, L-312 Ø13 mm 220 V AMBAR | | 1 | 1 | 1 | 1 | 1 | 1 | 1 | 1 | | | |
| 10 | 6005520103 | Protección trasera inox cuadro eléctrico mesa fría, inox | | 1 | 1 | 1 | 1 | 1 | 1 | 1 | 1 | | | |
| 11 | 6000202204 | Bandeja evaporación automática, Plastico inyectado | | 1 | 1 | 1 | 1 | 1 | 1 | 1 | 1 | | | |
| 12 | 6000201012 | Bandeja goteo evaporador tiro forzado, Gaveta tiro forzado mesa fría GN / pastelería | | 1 | 1 | 1 | 1 | 1 | 1 | 1 | 1 | | | |
| 14 | 6009990360 | Conjunto pata regulable Mesa Fria, Estanteria y Mesa Cafetera, ø50x107 / 147 | | 4 | 4 | 4 | 4 | 4 | 4 | 4 | 6 | | | |
| 15 | 6002501002 | Base lateral apoyo mesa Gastronorma, zincado 600x100 | | 1 | 1 | 1 | 1 | 1 | 1 | 1 | 1 | | | |
| 16 | 6009992206 | Juego bisagra mesa fria apertura derecha tirador horizontal, | | 2 | 3 | 4 | 5 | 2 | 3 | 4 | 5 | | | |
| 16 | 6009992204 | Juego bisagra mesa fria apertura derecha tirador vertical, | | 2 | 3 | 4 | 5 | 2 | 3 | 4 | 5 | | | |
| 16 | 6009992205 | Juego bisagra mesa fria apertura izquierda tirador horizontal, | | 2 | 3 | 4 | 5 | 2 | 3 | 4 | 5 | | | |
| 16 | 6009992203 | Juego bisagra mesa fria apertura izquierda tirador vertical, | | 2 | 3 | 4 | 5 | 2 | 3 | 4 | 5 | | | |
| 17 | 6000202237 | Soporte rejilla cuadro de mandos, | | 2 | 2 | 2 | 2 | 2 | 2 | 2 | 2 | | | |
| 18 | 6000202213 | Escuadra amarre rejilla cuadro de mandos, | | 1 | 1 | 1 | 1 | 1 | 1 | 1 | 1 | | | |
| 20 | 6009990037 | Juego guias estante parrilla interior (central), Gastronorma 1/1 "U" 605 mm | | | | | | 4 | 6 | 8 | 10 | | | |
| 20 | 6009990002 | Juego guias estante parrilla interior, Gastronorma 1/1 "U" 550 mm | | 4 | 6 | 8 | 10 | | | | | | | |
| 21 | 6001802001 | Rejilla trasera protección motor mesa fria, Alambre zincado | | 1 | 1 | 1 | 1 | | | | | | | |
| 23 | 6009990225 | Cremallera lateral trasera, mesa GN 1/1 | | 2 | 2 | 2 | 2 | | | | | | | |
| 24 | 6009990226 | Cremallera central trasera, mesa GN 1/1 | | 1 | 2 | 3 | 4 | | | | | | | |
| 25 | 6009990218 | Cremallera delantera, mesa fria Snack / Pasteleria / GN 1/1 | | 4 | 6 | 8 | 10 | 8 | 12 | 16 | 20 | | | |
| 27 | 6001401101 | Burlete puerta mesa GN, 400x605 UR-260-M | | 2 | 3 | 4 | 5 | 2 | 3 | 4 | 5 | | | |

FAGOR
FAGOFRI SA

## PLANO DESPIECE

| | FAGOFRI Código | MATERIAL / MODELO | DSP-0143 MFP-135-GN | DSP-0143 MFP-180-GN | DSP-0143 MFP-225-GN | DSP-0143 MFP-270-GN | DSP-0143 MCP-135-GN | DSP-0143 MCP-180-GN | DSP-0143 MCP-225-GN | DSP-0143 MCP-270-GN | DSP-0160 C GN-2x1/2 | DSP-0161 C GN-3x1/3 | DSP-0162 C GN-1/3+2/3 |
|---|---|---|---|---|---|---|---|---|---|---|---|---|---|
| | | | 1 | 1 | 1 | 1 | 1 | 1 | 1 | 1 | 1 | 1 | 1 |
| 29 | 6009990172 | Puerta mesa GN apertura derecha refrigeracion tirador horizontal, 435x640 | 2 | 3 | 4 | 5 | 2 | 3 | 4 | 5 | | | |
| 29 | 6009990171 | Puerta mesa GN apertura derecha refrigeracion tirador vertical, 435x640 | 2 | 3 | 4 | 5 | 2 | 3 | 4 | 5 | | | |
| 29 | 6009990170 | Puerta mesa GN apertura izquierda refrigeracion tirador horizontal, 435x640 | 2 | 3 | 4 | 5 | 2 | 3 | 4 | 5 | | | |
| 29 | 6009990010 | Puerta mesa GN apertura izquierda refrigeracion tirador vertical, 435x640 | 2 | 3 | 4 | 5 | 2 | 3 | 4 | 5 | | | |
| 32 | 6009991504 | Tubo capilar, 1,0x3300 | 1 | 1 | 1 | | 1 | 1 | 1 | | | | |
| 32 | 6009991507 | Tubo capilar, 1,25x2100 | | | | 1 | | | | 1 | | | |
| 33 | 6009991020 | Encimera inox. Gastronorma central, 1350x760 | | | | | 1 | | | | | | |
| 33 | 6009991022 | Encimera inox. Gastronorma central, 1800x760 | | | | | | 1 | | | | | |
| 33 | 6009991024 | Encimera inox. Gastronorma central, 2250x760 | | | | | | | 1 | | | | |
| 33 | 6009991026 | Encimera inox. Gastronorma central, 2700x760 | | | | | | | | 1 | | | |
| 33 | 6009991301 | Encimera inox. Gastronorma especial 1350x700 peto 100 mm | 1 | | | | | | | | | | |
| 33 | 6009991050 | Encimera inox. Gastronorma especial 1350x700 peto 100 mm y fregadero lado derecho | 1 | | | | | | | | | | |
| 33 | 6009991057 | Encimera inox. Gastronorma especial 1350x700 peto 100 mm y fregadero lado izquierdo | 1 | | | | | | | | | | |
| 33 | 6009991167 | Encimera inox. Gastronorma especial 1350x700 peto 45 mm | 1 | | | | | | | | | | |
| 33 | 6009991302 | Encimera inox. Gastronorma especial 1800x700 peto 100 mm | | 1 | | | | | | | | | |
| 33 | 6009991051 | Encimera inox. Gastronorma especial 1800x700 peto 100 mm y fregadero lado derecho | | 1 | | | | | | | | | |
| 33 | 6009991054 | Encimera inox. Gastronorma especial 1800x700 peto 100 mm y fregadero lado izquierdo | | 1 | | | | | | | | | |
| 33 | 6009991169 | Encimera inox. Gastronorma especial 1800x700 peto 45 mm | | 1 | | | | | | | | | |
| 33 | 6009991303 | Encimera inox. Gastronorma especial 2250x700 peto 100 mm | | | 1 | | | | | | | | |
| 33 | 6009991052 | Encimera inox. Gastronorma especial 2250x700 peto 100 mm y fregadero lado derecho | | | 1 | | | | | | | | |
| 33 | 6009991055 | Encimera inox. Gastronorma especial 2250x700 peto 100 mm y fregadero lado izquierdo | | | 1 | | | | | | | | |
| 33 | 6009991171 | Encimera inox. Gastronorma especial 2250x700 peto 45 mm | | | 1 | | | | | | | | |
| 33 | 6009991304 | Encimera inox. Gastronorma especial 2700x700 peto 100 mm | | | | 1 | | | | | | | |
| 33 | 6009991053 | Encimera inox. Gastronorma especial 2700x700 peto 100 mm y fregadero lado derecho | | | | 1 | | | | | | | |
| 33 | 6009991056 | Encimera inox. Gastronorma especial 2700x700 peto 100 mm y fregadero lado izquiedo | | | | 1 | | | | | | | |
| 33 | 6009991173 | Encimera inox. Gastronorma especial 2700x700 peto 45 mm | | | | 1 | | | | | | | |
| 33 | 6009991012 | Encimera inox. Gastronorma, 1350x700 | 1 | | | | | | | | | | |
| 33 | 6009991014 | Encimera inox. Gastronorma, 1800x700 | | 1 | | | | | | | | | |
| 33 | 6009991016 | Encimera inox. Gastronorma, 2250x700 | | | 1 | | | | | | | | |
| 33 | 6009991018 | Encimera inox. Gastronorma, 2700x700 | | | | 1 | | | | | | | |
| 35 | 6009991100 | Decorativo encimera, aluminio 1345x55 | 1 | | | | 2 | | | | | | |
| 35 | 6009991102 | Decorativo encimera, aluminio 1795x55 | | 1 | | | | 2 | | | | | |
| 35 | 6009991104 | Decorativo encimera, aluminio 2245x55 | | | 1 | | | | 2 | | | | |
| 35 | 6009991106 | Decorativo encimera, aluminio 2695x55 | | | | 1 | | | | 2 | | | |

FAGOR
FAGOFRI SA

## PLANO DESPIECE

| | FAGOFRI Código | MATERIAL / MODELO | DSP-0143 MFP-135-GN | DSP-0143 MFP-180-GN | DSP-0143 MFP-225-GN | DSP-0143 MFP-270-GN | DSP-0143 MCP-135-GN | DSP-0143 MCP-180-GN | DSP-0143 MCP-225-GN | DSP-0143 MCP-270-GN | DSP-0160 C GN-2x1/2 | DSP-0161 C GN-3x1/3 | DSP-0162 C GN-1/3+2/3 |
|---|---|---|---|---|---|---|---|---|---|---|---|---|---|
| | | | 1 | 1 | 1 | 1 | 1 | 1 | 1 | 1 | 1 | 1 | 1 |
| 36 | 6009991133 | Techo interior, aluminio 1275x540 | | 1 | | | | 1 | | | | | |
| 36 | 6009991136 | Techo interior, aluminio 1730x540 | | | 1 | | | | 1 | | | | |
| 36 | 6009991139 | Techo interior, aluminio 2020x540 | | | | 1 | | | | 1 | | | |
| 36 | 6009991142 | Techo interior, aluminio 830x540 | 1 | | | | 1 | | | | | | |
| 37 | 6009991202 | Aislamiento techo interior, porexpan 1310x566x30 | | 1 | | | | 1 | | | | | |
| 37 | 6009991205 | Aislamiento techo interior, porexpan 1760x566x30 | | | 1 | | | | 1 | | | | |
| 37 | 6009991208 | Aislamiento techo interior, porexpan 2110x566x30 | | | | 1 | | | | 1 | | | |
| 37 | 6009991211 | Aislamiento techo interior, porexpan 860x566x30 | 1 | | | | 1 | | | | | | |
| 38 | 6009990005 | Rejilla cuadro de mandos apertura derecha, Acero inox 427x645 | 1 | 1 | 1 | 1 | 2 | 2 | 2 | 2 | | | |
| 38 | 6009990130 | Rejilla cuadro de mandos apertura derecha, Acero inox 427x645 | 1 | 1 | 1 | 1 | 2 | 2 | 2 | 2 | | | |
| 40 | 6009990047 | Costado lado grupo Mesa Gastronorma, Acero inox. 635x725 | 1 | 1 | 1 | 1 | 1 | 1 | 1 | 1 | | | |
| 41 | 6001801003 | Estante parrilla GN 1/1, 325x530 | 2 | 3 | 4 | 5 | 2 | 3 | 4 | 5 | | | |
| 42 | 6001507041 | Interruptor paro ventilador tiro forzado (MESAS FRIAS), Pulsador 1005172 NA/M14,2S4,BM | 1 | 1 | 1 | 1 | 2 | 2 | 2 | 2 | | | |
| 44 | 6002000032 | Relé de arranque compresor FR-7,5-G, Danfoss 117U6001 | 1 | | | | 1 | | | | | | |
| 44 | 6002000031 | Relé de arranque compresor FR-8,5-G, Danfoss 117U6015 | | 1 | 1 | | | 1 | 1 | | | | |
| 44 | 6004000003 | Relé de arranque compresor SC-12-G, Danfoss 117U6003 | | | | 1 | | | | 1 | | | |
| 45 | 6004000008 | Condensador de arranque FR, Danfoss 117U5015 | 1 | 1 | 1 | | 1 | 1 | 1 | | | | |
| 45 | 6004000009 | Condensador de arranque SC, Danfoss 117U5017 | | | | 1 | | | | 1 | | | |
| 46 | 6000601003 | Filtro secador, 40 gr. 1/4 x 1/4 | 1 | 1 | 1 | 1 | 1 | 1 | 1 | 1 | | | |
| 47 | 6001508003 | Resistencia marco puerta Gastro-1, 10 W x m, 1970+600 | 1 | 1 | 1 | 1 | 2 | 2 | 2 | 2 | | | |
| 47 | 6001508004 | Resistencia marco puerta Gastro-2, 10 W x m, 1970+200+600 | 1 | 2 | 3 | 4 | 2 | 4 | 6 | 8 | | | |
| 48 | 6002000057 | Sonda termostato, NTC 938 Ohm | 1 | 1 | 1 | 1 | 1 | 1 | 1 | 1 | | | |
| 134 | 6005510261 | Decorativo mesa fria GN 1/1 apertura derecha, inox satinado 1344x45 | 1 | | | | 1 | | | | | | |
| 134 | 6005510262 | Decorativo mesa fria GN 1/1 apertura derecha, inox satinado 1794x45 | | 1 | | | | 1 | | | | | |
| 134 | 6005510263 | Decorativo mesa fria GN 1/1 apertura derecha, inox satinado 2244x45 | | | 1 | | | | 1 | | | | |
| 134 | 6005510264 | Decorativo mesa fria GN 1/1 apertura derecha, inox satinado 2694x45 | | | | 1 | | | | 1 | | | |
| 134 | 6005510253 | Decorativo mesa fria GN 1/1 apertura izquierda, inox satinado 1344x45 | 1 | | | | 1 | | | | | | |
| 134 | 6005510254 | Decorativo mesa fria GN 1/1 apertura izquierda, inox satinado 1794x45 | | 1 | | | | 1 | | | | | |
| 134 | 6005510255 | Decorativo mesa fria GN 1/1 apertura izquierda, inox satinado 2244x45 | | | 1 | | | | 1 | | | | |
| 134 | 6005510256 | Decorativo mesa fria GN 1/1 apertura izquierda, inox satinado 2694x45 | | | | 1 | | | | 1 | | | |
| A | 6009990604 | Frente cajón refrigerado GN-100, 435x210 | | | | | | | | | | 3 | 1 |
| A | 6009990603 | Frente cajón refrigerado GN-200, 435x315 | | | | | | | | | 2 | | |
| B | 6001401115 | Burlete frente cajón GN 1/1-100, 400x175 | | | | | | | | | | 3 | 1 |
| B | 6001401107 | Burlete frente cajón GN 1/1-200, 400x280 | | | | | | | | | 2 | | |

FAGOR
FAGOFRI SA

## PLANO DESPIECE

| | FAGOFRI Código | MATERIAL | MODELO | DSP-0143 MFP-135-GN | DSP-0143 MFP-180-GN | DSP-0143 MFP-225-GN | DSP-0143 MFP-270-GN | DSP-0143 MCP-135-GN | DSP-0143 MCP-180-GN | DSP-0143 MCP-225-GN | DSP-0143 MCP-270-GN | DSP-0160 C GN-2x1/2 | DSP-0161 C GN-3x1/3 | DSP-0162 C GN-1/3+2/3 |
|---|---|---|---|---|---|---|---|---|---|---|---|---|---|---|
| | | | | 1 | 1 | 1 | 1 | 1 | 1 | 1 | 1 | 1 | 1 | 1 |
| C | 6000201008 | Fijación Fronti Horizontal Cajonera Refrigerada, | | | | | | | | | | 4 | 6 | 4 |
| D | 6009990613 | Fronti (completo) separador cajones GN COMÚN, 345x95x60 | | | | | | | | | | 1 | 2 | 1 |
| E | 6005520192 | Cuerpo cajón GN 1/1-100, 300x555x100 | | | | | | | | | | | 3 | 1 |
| E | 6005520190 | Cuerpo cajón GN 1/1-200, 300x555x190 | | | | | | | | | | 2 | | |
| F | 6003001010 | Guia telescópica desmontable inox GN 1/1, | | | | | | | | | | 2 | 3 | 2 |
| G | 6009990605 | Frente cajón refrigerado GN-300, 435x420 | | | | | | | | | | | | 1 |
| H | 6009990612 | Burlete frente cajón GN 1/1-300, 400x390 | | | | | | | | | | | | 1 |
| I | 6005520193 | Cuerpo cajón GN 1/1-300, 300x555x290 | | | | | | | | | | | | 1 |

FAGOR
FAGOFRI SA

## PLANO DESPIECE

| | FAGOFRI Código | MATERIAL | DSP-0143 MFN-135-GN | DSP-0143 MFN-180-GN | DSP-0143 MFN-225-GN | DSP-0143 MFN-270-GN | DSP-0143 MCN-135-GN | DSP-0143 MCN-180-GN | DSP-0143 MCN-225-GN | DSP-0143 MCN-270-GN | DSP-0160 C GN-2x1/2 | DSP-0161 C GN-3x1/3 | DSP-0162 C GN-1/3+2/3 |
|---|---|---|---|---|---|---|---|---|---|---|---|---|---|
| MODELO | | | 1 | 1 | 1 | 1 | 1 | 1 | 1 | 1 | 1 | 1 | 1 |
| 1 | 6001710004 | Compresor, ASPERA J-2192-GK | | | | 1 | | | | | | | |
| 1 | 6001710001 | Compresor, Danfoss SC-12-CL | 1 | 1 | | | 1 | 1 | | | | | |
| 1 | 6001710003 | Compresor, Danfoss SC-18-CL | | | 1 | | | | 1 | 1 | | | |
| 2 | 6001506002 | Ventilador unidad condensadora, 10 w con pala y pata | 1 | 1 | 1 | 1 | 1 | 1 | 1 | 1 | | | |
| 3 | 6001911005 | Condensador, 10x4 derecha techo | 1 | 1 | 1 | 1 | 1 | 1 | | | | | |
| 4 | 6001903001 | Evaporador, Bateria FC-61-B | 1 | 1 | | | 1 | 1 | | | | | |
| 4 | 6001903003 | Evaporador, Bateria FC-71-B | | | 1 | 1 | | | 1 | 1 | | | |
| 5 | 6004000011 | Ventilador Evaporador FC-61-B / FC-62-B, 5 w con pala y aro GC | 1 | 1 | | | 1 | 1 | | | | | |
| 5 | 6004000012 | Ventilador Evaporador FC-71-B / FC-72-B, 10 w con pala y aro GC | | | 1 | 1 | | | 1 | 1 | | | |
| 6 | 6004000013 | Rejilla protección ventilador evaporador FC, Alambre Ø 200 | 1 | 1 | | | 1 | 1 | | | | | |
| 6 | 6004000014 | Rejilla protección ventilador evaporador FC, Alambre Ø 250 | | | 1 | 1 | | | 1 | 1 | | | |
| 7 | 6001507044 | Control digital mant. congelados, Carel PJ32C00000 (220 v, 3 botones, 3 reles) | 1 | 1 | 1 | 1 | 1 | 1 | 1 | 1 | | | |
| 7 | 6001507043 | Control digital mant. congelados, Carel PJ32SE (12 v, 4 botones, 4 reles) | 1 | 1 | 1 | 1 | 1 | 1 | 1 | 1 | | | |
| 7 | 6001507012 | Control digital mant. congelados, ELIWELL EWPC 974 con sondas y tranformador | 1 | 1 | 1 | 1 | 1 | 1 | 1 | 1 | | | |
| 7 | 6001507042 | Control digital mant. congelados, ELIWELL EWPX-174 con sondas y transformador | 1 | 1 | 1 | 1 | 1 | 1 | 1 | 1 | | | |
| 8 | 6001507003 | Interruptor general on / off, BIPOLAR N/ABMAR 220 V. IB4-3106 | 1 | 1 | 1 | 1 | 1 | 1 | 1 | 1 | | | |
| 9 | 6001507005 | Piloto funcionamiento compresor, L-312 Ø13 mm 220 V AMBAR | 1 | 1 | 1 | 1 | 1 | 1 | 1 | 1 | | | |
| 10 | 6005520103 | Protección trasera inox cuadro eléctrico mesa fría, inox | 1 | 1 | 1 | 1 | 1 | 1 | 1 | 1 | | | |
| 11 | 6000202204 | Bandeja evaporación automática, Plastico inyectado | 1 | 1 | 1 | 1 | 1 | 1 | 1 | 1 | | | |
| 12 | | Bandeja goteo evaporador FC-61-B mesa fría, Aluminio | 1 | 1 | | | 1 | 1 | | | | | |
| 12 | 6004000017 | Bandeja goteo evaporador FC-71-B mesa fría, Aluminio | | | 1 | 1 | | | 1 | 1 | | | |
| 14 | 6009990360 | Conjunto pata regulable Mesa Fria, Estanteria y Mesa Cafetera, ø50x107 / 147 | 4 | 4 | 4 | 4 | 4 | 4 | 4 | 6 | | | |
| 15 | 6002501002 | Base lateral apoyo mesa Gastronorma, zincado 600x100 | 1 | 1 | 1 | 1 | 1 | 1 | 1 | 1 | | | |
| 16 | 6009992206 | Juego bisagra mesa fria apertura derecha tirador horizontal, | 2 | 3 | 4 | 5 | 2 | 3 | 4 | 5 | | | |
| 16 | 6009992204 | Juego bisagra mesa fria apertura derecha tirador vertical, | 2 | 3 | 4 | 5 | 2 | 3 | 4 | 5 | | | |
| 16 | 6009992205 | Juego bisagra mesa fria apertura izquierda tirador horizontal, | 2 | 3 | 4 | 5 | 2 | 3 | 4 | 5 | | | |
| 16 | 6009992203 | Juego bisagra mesa fria apertura izquierda tirador vertical, | 2 | 3 | 4 | 5 | 2 | 3 | 4 | 5 | | | |
| 17 | 6000202237 | Soporte rejilla cuadro de mandos, | 2 | 2 | 2 | 2 | 4 | 4 | 4 | 4 | | | |
| 18 | 6000202213 | Escuadra amarre rejilla cuadro de mandos, | 1 | 1 | 1 | 1 | 2 | 2 | 2 | 2 | | | |
| 20 | 6009990037 | Juego guias estante parrilla interior (central), Gastronorma 1/1 "U" 605 mm | | | | | 4 | 6 | 8 | 10 | | | |
| 20 | 6009990002 | Juego guias estante parrilla interior, Gastronorma 1/1 "U" 550 mm | 4 | 6 | 8 | 10 | | | | | | | |
| 23 | 6009990225 | Cremallera lateral trasera, mesa GN 1/1 | 2 | 2 | 2 | 2 | | | | | | | |
| 24 | 6009990226 | Cremallera central trasera, mesa GN 1/1 | 1 | 2 | 3 | 4 | | | | | | | |
| 25 | 6009990218 | Cremallera delantera, mesa fria Snack / Pasteleria / GN 1/1 | 4 | 6 | 8 | 10 | 8 | 12 | 16 | 20 | | | |

FAGOR
FAGOFRI SA

## PLANO DESPIECE

| | FAGOFRI Código | MATERIAL | MODELO | DSP-0143 MFN-135-GN | DSP-0143 MFN-180-GN | DSP-0143 MFN-225-GN | DSP-0143 MFN-270-GN | DSP-0143 MCN-135-GN | DSP-0143 MCN-180-GN | DSP-0143 MCN-225-GN | DSP-0143 MCN-270-GN | DSP-0160 C GN-2x1/2 | DSP-0161 C GN-3x1/3 | DSP-0162 C GN-1/3+2/3 |
|---|---|---|---|---|---|---|---|---|---|---|---|---|---|---|
| | | | | 1 | 1 | 1 | 1 | 1 | 1 | 1 | 1 | 1 | 1 | 1 |
| 27 | 6001401101 | Burlete puerta mesa GN, 400x605 UR-260-M | | 2 | 3 | 4 | 5 | 2 | 3 | 4 | 5 | | | |
| 29 | 6009990178 | Puerta mesa GN apertura derecha mant cong tirador horizontal, 435x640 | | 2 | 3 | 4 | 5 | 2 | 3 | 4 | 5 | | | |
| 29 | 6009990177 | Puerta mesa GN apertura derecha mant cong tirador vertical, 435x640 | | 2 | 3 | 4 | 5 | 2 | 3 | 4 | 5 | | | |
| 29 | 6009990176 | Puerta mesa GN apertura izquierda mant cong tirador horizontal, 435x640 | | 2 | 3 | 4 | 5 | 2 | 3 | 4 | 5 | | | |
| 29 | 6009990014 | Puerta mesa GN apertura izquierda mant cong tirador vertical, 435x640 | | 2 | 3 | 4 | 5 | 2 | 3 | 4 | 5 | | | |
| 32 | 6009991510 | Tubo capilar, 1,25x2900 | | | | 1 | | | | 1 | | | | |
| 32 | 6009991508 | Tubo capilar, 1,25x3500 | | 1 | 1 | | | 1 | 1 | | | | | |
| 32 | 6009991516 | Tubo capilar, 1,5x2000 | | | | | 1 | | | | 1 | | | |
| 33 | 6009991020 | Encimera inox. Gastronorma central, 1350x760 | | | | | | 1 | | | | | | |
| 33 | 6009991022 | Encimera inox. Gastronorma central, 1800x760 | | | | | | | 1 | | | | | |
| 33 | 6009991024 | Encimera inox. Gastronorma central, 2250x760 | | | | | | | | 1 | | | | |
| 33 | 6009991026 | Encimera inox. Gastronorma central, 2700x760 | | | | | | | | | 1 | | | |
| 33 | 6009991301 | Encimera inox. Gastronorma especial 1350x700 peto 100 mm | | 1 | | | | | | | | | | |
| 33 | 6009991167 | Encimera inox. Gastronorma especial 1350x700 peto 45 mm | | 1 | | | | | | | | | | |
| 33 | 6009991302 | Encimera inox. Gastronorma especial 1800x700 peto 100 mm | | | 1 | | | | | | | | | |
| 33 | 6009991169 | Encimera inox. Gastronorma especial 1800x700 peto 45 mm | | | 1 | | | | | | | | | |
| 33 | 6009991303 | Encimera inox. Gastronorma especial 2250x700 peto 100 mm | | | | 1 | | | | | | | | |
| 33 | 6009991171 | Encimera inox. Gastronorma especial 2250x700 peto 45 mm | | | | 1 | | | | | | | | |
| 33 | 6009991304 | Encimera inox. Gastronorma especial 2700x700 peto 100 mm | | | | | 1 | | | | | | | |
| 33 | 6009991173 | Encimera inox. Gastronorma especial 2700x700 peto 45 mm | | | | | 1 | | | | | | | |
| 33 | 6009991012 | Encimera inox. Gastronorma, 1350x700 | | 1 | | | | | | | | | | |
| 33 | 6009991014 | Encimera inox. Gastronorma, 1800x700 | | | 1 | | | | | | | | | |
| 33 | 6009991016 | Encimera inox. Gastronorma, 2250x700 | | | | 1 | | | | | | | | |
| 33 | 6009991018 | Encimera inox. Gastronorma, 2700x700 | | | | | 1 | | | | | | | |
| 35 | 6009991100 | Decorativo encimera, aluminio 1345x55 | | 1 | | | | 1 | | | | | | |
| 35 | 6009991102 | Decorativo encimera, aluminio 1795x55 | | | 1 | | | | 1 | | | | | |
| 35 | 6009991104 | Decorativo encimera, aluminio 2245x55 | | | | 1 | | | | 1 | | | | |
| 35 | 6009991106 | Decorativo encimera, aluminio 2695x55 | | | | | 1 | | | | 1 | | | |
| 36 | 6009991133 | Techo interior, aluminio 1275x540 | | | 1 | | | | 1 | | | | | |
| 36 | 6009991136 | Techo interior, aluminio 1730x540 | | | | 1 | | | | 1 | | | | |
| 36 | 6009991139 | Techo interior, aluminio 2020x540 | | | | | 1 | | | | 1 | | | |
| 36 | 6009991142 | Techo interior, aluminio 830x540 | | 1 | | | | 1 | | | | | | |
| 37 | 6009991202 | Aislamiento techo interior, porexpan 1310x566x30 | | | 1 | | | | 1 | | | | | |
| 37 | 6009991205 | Aislamiento techo interior, porexpan 1760x566x30 | | | | 1 | | | | 1 | | | | |

FAGOR
FAGOFRI SA

## PLANO DESPIECE

| | FAGOFRI Código | MATERIAL / MODELO | DSP-0143 MFN-135-GN | DSP-0143 MFN-180-GN | DSP-0143 MFN-225-GN | DSP-0143 MFN-270-GN | DSP-0143 MCN-135-GN | DSP-0143 MCN-180-GN | DSP-0143 MCN-225-GN | DSP-0143 MCN-270-GN | DSP-0160 C GN-2x1/2 | DSP-0161 C GN-3x1/3 | DSP-0162 C GN-1/3+2/3 |
|---|---|---|---|---|---|---|---|---|---|---|---|---|---|
| | | | 1 | 1 | 1 | 1 | 1 | 1 | 1 | 1 | 1 | 1 | 1 |
| 37 | 6009991208 | Aislamiento techo interior, porexpan 2110x566x30 | | | | 1 | | | | 1 | | | |
| 37 | 6009991211 | Aislamiento techo interior, porexpan 860x566x30 | 1 | | | | 1 | | | | | | |
| 38 | 6009990005 | Rejilla cuadro de mandos apertura derecha, Acero inox 427x645 | 1 | 1 | 1 | 1 | 1 | 1 | 1 | 1 | | | |
| 38 | 6009990130 | Rejilla cuadro de mandos apertura derecha, Acero inox 427x645 | 1 | 1 | 1 | 1 | 1 | 1 | 1 | 1 | | | |
| 40 | 6009990047 | Costado lado grupo Mesa Gastronorma, Acero inox. 635x725 | 1 | 1 | 1 | 1 | 1 | 1 | 1 | 1 | | | |
| 41 | 6001801003 | Estante parrilla GN 1/1, 325x530 | 2 | 3 | 4 | 5 | 2 | 3 | 4 | 5 | | | |
| 42 | 6001507041 | Interruptor paro ventilador tiro forzado (MESAS FRIAS), Pulsador 1005172 NA/M14,2S4,BM | 1 | 1 | 1 | 1 | 1 | 2 | 2 | 2 | | | |
| 44 | 6004000004 | Relé de arranque compresor SC-15-CL, Danfoss 117U6005 | 1 | 1 | | | 1 | 1 | | | | | |
| 44 | 6004000005 | Relé de arranque compresor SC-18-CL, Danfoss 117 / 7012 | | | 1 | 1 | | | 1 | 1 | | | |
| 45 | 6004000009 | Condensador de arranque SC, Danfoss 117U5017 | 1 | 1 | 1 | 1 | 1 | 1 | 1 | 1 | | | |
| 46 | 6000601003 | Filtro secador, 40 gr. 1/4 x 1/4 | 1 | 1 | 1 | 1 | 1 | 1 | 1 | 1 | | | |
| 47 | 6001508003 | Resistencia marco puerta Gastro-1, 10 W x m, 1970+600 | 1 | 1 | 1 | 1 | 2 | 2 | 2 | 2 | | | |
| 47 | 6001508004 | Resistencia marco puerta Gastro-2, 10 W x m, 1970+200+600 | 1 | 2 | 3 | 4 | 2 | 4 | 6 | 8 | | | |
| 48 | 6002000057 | Sonda termostato, NTC 938 Ohm | 2 | 2 | 2 | 2 | 2 | 2 | 2 | 2 | | | |
| 117 | 6001508011 | Resistencia bandeja goteo evaporador, 18 w | 1 | 1 | 1 | 1 | 1 | 1 | 1 | 1 | | | |
| 117 | 6001508021 | Resistencia descarche evaporador 61 - 71, 350 w cable corto | 1 | 1 | 1 | 1 | 1 | 1 | 1 | 1 | | | |
| 134 | 6005510261 | Decorativo mesa fria GN 1/1 apertura derecha, inox satinado 1344x45 | 1 | | | | 1 | | | | | | |
| 134 | 6005510262 | Decorativo mesa fria GN 1/1 apertura derecha, inox satinado 1794x45 | | 1 | | | | 1 | | | | | |
| 134 | 6005510263 | Decorativo mesa fria GN 1/1 apertura derecha, inox satinado 2244x45 | | | 1 | | | | 1 | | | | |
| 134 | 6005510264 | Decorativo mesa fria GN 1/1 apertura derecha, inox satinado 2694x45 | | | | 1 | | | | 1 | | | |
| 134 | 6005510253 | Decorativo mesa fria GN 1/1 apertura izquierda, inox satinado 1344x45 | 1 | | | | 1 | | | | | | |
| 134 | 6005510254 | Decorativo mesa fria GN 1/1 apertura izquierda, inox satinado 1794x45 | | 1 | | | | 1 | | | | | |
| 134 | 6005510255 | Decorativo mesa fria GN 1/1 apertura izquierda, inox satinado 2244x45 | | | 1 | | | | 1 | | | | |
| 134 | 6005510256 | Decorativo mesa fria GN 1/1 apertura izquierda, inox satinado 2694x45 | | | | 1 | | | | 1 | | | |
| A | 6009990604 | Frente cajón refrigerado GN-100, 435x210 | | | | | | | | | | 3 | 1 |
| A | 6009990603 | Frente cajón refrigerado GN-200, 435x315 | | | | | | | | | 2 | | |
| B | 6001401115 | Burlete frente cajón GN 1/1-100, 400x175 | | | | | | | | | | 3 | 1 |
| B | 6001401107 | Burlete frente cajón GN 1/1-200, 400x280 | | | | | | | | | 2 | | |
| C | 6000201008 | Fijación Fronti Horizontal Cajonera Refrigerada, | | | | | | | | | 4 | 6 | 4 |
| D | 6009990613 | Fronti (completo) separador cajones GN COMÚN, 345x95x60 | | | | | | | | | 1 | 2 | 1 |
| E | 6005520192 | Cuerpo cajón GN 1/1-100, 300x555x100 | | | | | | | | | | 3 | 1 |
| E | 6005520190 | Cuerpo cajón GN 1/1-200, 300x555x190 | | | | | | | | | 2 | | |
| F | 6003001010 | Guia telescópica desmontable inox GN 1/1, | | | | | | | | | 2 | 3 | 2 |
| G | 6009990605 | Frente cajón refrigerado GN-300, 435x420 | | | | | | | | | | | 1 |

FAGOR
FAGOFRI SA

**PLANO DESPIECE**

| | FAGOFRI Código | MATERIAL | DSP-0143 MFN-135-GN | DSP-0143 MFN-180-GN | DSP-0143 MFN-225-GN | DSP-0143 MFN-270-GN | DSP-0143 MCN-135-GN | DSP-0143 MCN-180-GN | DSP-0143 MCN-225-GN | DSP-0143 MCN-270-GN | DSP-0160 C GN-2x1/2 | DSP-0161 C GN-3x1/3 | DSP-0162 C GN-1/3+2/3 |
|---|---|---|---|---|---|---|---|---|---|---|---|---|---|
| **MODELO** | | | 1 | 1 | 1 | 1 | 1 | 1 | 1 | 1 | 1 | 1 | 1 |
| H | 6009990612 | Burlete frente cajón GN 1/1-300, 400x390 | | | | | | | | | | | 1 |
| I | 6005520193 | Cuerpo cajón GN 1/1-300, 300x555x290 | | | | | | | | | | | 1 |

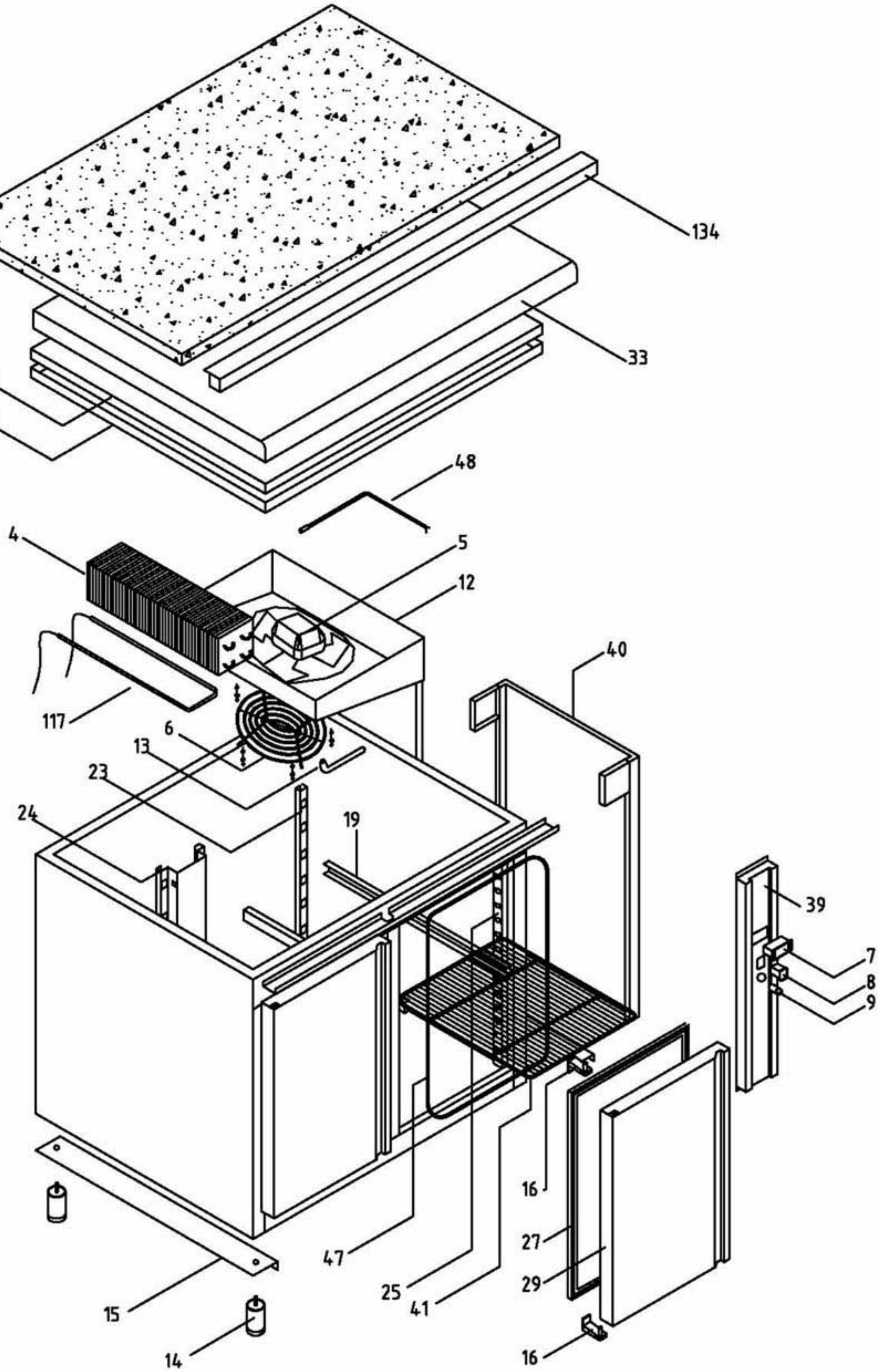


COMÚN A

Mesas Frias GN 1/1 y Pastelería 400x600, refrigeración y mantenimiento de congelados, preinstalación

Mesas Frias GN 1/1 y Pastelería 400x600, refrigeración y mantenimiento de congelados, centrales y murales

| | Firma | Fecha |
|---|---|---|
| Dibujado | M. Mellado | 28/02/01 |
| Proyectado | | |
| Comprobado | | |

# DESPIECE MESAS FRIAS PREINSTALACION

Código: DSP0144

FAGOR
FAGOFRI s.a.

FAGOR
FAGOFRI SA

## PLANO DESPIECE

| | FAGOFRI Código | MATERIAL / MODELO | DSP-0144 MFP-102-GN/R | DSP-0144 MFP-147-GN/R | DSP-0144 MFP-192-GN/R | DSP-0144 MFP-237-GN/R | DSP-0144 MCP-102-GN/R | DSP-0144 MCP-147-GN/R | DSP-0144 MCP-192-GN/R | DSP-0144 MCP-237-GN/R | DSP-0160 C GN-2x1/2 | DSP-0161 C GN-3x1/3 | DSP-0162 C GN-1/3+2/3 |
|---|---|---|---|---|---|---|---|---|---|---|---|---|---|
| | | | 1 | 1 | 1 | 1 | 1 | 1 | 1 | 1 | 1 | 1 | 1 |
| 4 | 6001902001 | Evaporador tiro forzado, B 5T 4R 330A 4S | 1 | 1 | 1 | | 1 | 1 | 1 | | | | |
| 4 | 6001902002 | Evaporador tiro forzado, B 8T 4R 330A 4S MESA FRIA | | | | 1 | | | | 1 | | | |
| 5 | 6001506001 | Ventilador Evaporador, 5 w con pala y aro | 1 | 1 | 1 | 1 | 1 | 1 | 1 | 1 | | | |
| 6 | 6000202216 | Rejilla protección ventilador evaporador, Plastico inyectado | 1 | 1 | 1 | 1 | 1 | 1 | 1 | 1 | | | |
| 7 | 6001507045 | Control digital refrigeración, CAREL IR32SE0000 con sonda y transformador | 1 | 1 | 1 | 1 | 1 | 1 | 1 | 1 | | | |
| 7 | 6001507046 | Control digital refrigeración, CAREL PJ32SOPOOK con sondas | 1 | 1 | 1 | 1 | 1 | 1 | 1 | 1 | | | |
| 7 | 6001507039 | Control digital refrigeración, ELIWELL EWDC 112 con sonda | 1 | 1 | 1 | 1 | 1 | 1 | 1 | 1 | | | |
| 7 | 6001507002 | Control digital refrigeración, ELIWELL EWPC 961 N con sonda y transformador | 1 | 1 | 1 | 1 | 1 | 1 | 1 | 1 | | | |
| 8 | 6001507003 | Interruptor general on / off, BIPOLAR N/ABMAR 220 V. IB4-3106 | 1 | 1 | 1 | 1 | 1 | 1 | 1 | 1 | | | |
| 9 | 6001507005 | Piloto funcionamiento compresor, L-312 Ø13 mm 220 V AMBAR | 1 | 1 | 1 | 1 | 1 | 1 | 1 | 1 | | | |
| 12 | 6000201012 | Bandeja goteo evaporador tiro forzado, Gaveta tiro forzado mesa fría GN / pastelería | 1 | 1 | 1 | 1 | 1 | 1 | 1 | 1 | | | |
| 14 | 6009990360 | Conjunto pata regulable Mesa Fria, Estanteria y Mesa Cafetera, ø50x107 / 147 | 4 | 4 | 4 | 4 | 4 | 4 | 4 | 6 | | | |
| 15 | 6002501002 | Base lateral apoyo mesa Gastronorma, zincado 600x100 | 1 | 1 | 1 | 1 | 1 | 1 | 1 | 1 | | | |
| 16 | 6009992206 | Juego bisagra mesa fria apertura derecha tirador horizontal, | 2 | 3 | 4 | 5 | 2 | 3 | 4 | 5 | | | |
| 16 | 6009992204 | Juego bisagra mesa fria apertura derecha tirador vertical, | 2 | 3 | 4 | 5 | 2 | 3 | 4 | 5 | | | |
| 16 | 6009992205 | Juego bisagra mesa fria apertura izquierda tirador horizontal, | 2 | 3 | 4 | 5 | 2 | 3 | 4 | 5 | | | |
| 16 | 6009992203 | Juego bisagra mesa fria apertura izquierda tirador vertical, | 2 | 3 | 4 | 5 | 2 | 3 | 4 | 5 | | | |
| 17 | 6000202237 | Soporte rejilla cuadro de mandos, | 2 | 3 | 4 | 5 | | | | | | | |
| 20 | 6009990037 | Juego guias estante parrilla interior (central), Gastronorma 1/1 "U" 605 mm | | | | | 4 | 6 | 8 | 10 | | | |
| 20 | 6009990002 | Juego guias estante parrilla interior, Gastronorma 1/1 "U" 550 mm | 4 | 6 | 8 | 10 | | | | | | | |
| 23 | 6009990225 | Cremallera lateral trasera, mesa GN 1/1 | 2 | 2 | 2 | 2 | | | | | | | |
| 24 | 6009990226 | Cremallera central trasera, mesa GN 1/1 | 1 | 2 | 3 | 4 | | | | | | | |
| 25 | 6009990218 | Cremallera delantera, mesa fría Snack / Pastelería / GN 1/1 | 4 | 6 | 8 | 10 | 8 | 12 | 16 | 20 | | | |
| 27 | 6001401101 | Burlete puerta mesa GN, 400x605 UR-260-M | 2 | 3 | 4 | 5 | 2 | 3 | 4 | 5 | | | |
| 29 | 6009990172 | Puerta mesa GN apertura derecha refrigeracion tirador horizontal, 435x640 | 2 | 3 | 4 | 5 | 2 | 3 | 4 | 5 | | | |
| 29 | 6009990171 | Puerta mesa GN apertura derecha refrigeracion tirador vertical, 435x640 | 2 | 3 | 4 | 5 | 2 | 3 | 4 | 5 | | | |
| 29 | 6009990170 | Puerta mesa GN apertura izquierda refrigeracion tirador horizontal, 435x640 | 2 | 3 | 4 | 5 | 2 | 3 | 4 | 5 | | | |
| 29 | 6009990010 | Puerta mesa GN apertura izquierda refrigeracion tirador vertical, 435x640 | 2 | 3 | 4 | 5 | 4 | 6 | 8 | 10 | | | |
| 33 | 6009991019 | Encimera inox. Gastronorma central, pre-instalación, 1050x760 | | | | | 1 | | | | | | |
| 33 | 6009991021 | Encimera inox. Gastronorma central, pre-instalación, 1500x760 | | | | | | 1 | | | | | |
| 33 | 6009991023 | Encimera inox. Gastronorma central, pre-instalación, 1950x760 | | | | | | | 1 | | | | |
| 33 | 6009991025 | Encimera inox. Gastronorma central, pre-instalación, 2400x760 | | | | | | | | 1 | | | |
| 33 | 6009991305 | Encimera inox. Gastronorma especial pre-instalación, 1050x700 peto 100 mm | 1 | | | | | | | | | | |
| 33 | 6009991166 | Encimera inox. Gastronorma especial pre-instalación, 1050x700 peto 45 mm | 1 | | | | | | | | | | |

FAGOR
FAGOFRI SA

## PLANO DESPIECE

| | FAGOFRI Código | MATERIAL | MODELO | DSP-0144 MFP-102-GN/R | DSP-0144 MFP-147-GN/R | DSP-0144 MFP-192-GN/R | DSP-0144 MFP-237-GN/R | DSP-0144 MCP-102-GN/R | DSP-0144 MCP-147-GN/R | DSP-0144 MCP-192-GN/R | DSP-0144 MCP-237-GN/R | DSP-0160 C GN-2x1/2 | DSP-0161 C GN-3x1/3 | DSP-0162 C GN-1/3+2/3 |
|---|---|---|---|---|---|---|---|---|---|---|---|---|---|---|
| | | | | 1 | 1 | 1 | 1 | 1 | 1 | 1 | 1 | 1 | 1 | 1 |
| 33 | 6009991306 | Encimera inox. Gastronorma especial pre-instalación, 1500x700 peto 100 mm | | | 1 | | | | | | | | | |
| 33 | 6009991168 | Encimera inox. Gastronorma especial pre-instalación, 1500x700 peto 45 mm | | | 1 | | | | | | | | | |
| 33 | 6009991307 | Encimera inox. Gastronorma especial pre-instalación, 1950x700 peto 100 mm | | | | 1 | | | | | | | | |
| 33 | 6009991170 | Encimera inox. Gastronorma especial pre-instalación, 1950x700 peto 45 mm | | | | 1 | | | | | | | | |
| 33 | 6009991308 | Encimera inox. Gastronorma especial pre-instalación, 2400x700 peto 100 mm | | | | | 1 | | | | | | | |
| 33 | 6009991172 | Encimera inox. Gastronorma especial pre-instalación, 2400x700 peto 45 mm | | | | | 1 | | | | | | | |
| 33 | 6009991011 | Encimera inox. Gastronorma, pre-instalación, 1050x700 | | 1 | | | | | | | | | | |
| 33 | 6009991013 | Encimera inox. Gastronorma, pre-instalación, 1500x700 | | | 1 | | | | | | | | | |
| 33 | 6009991015 | Encimera inox. Gastronorma, pre-instalación, 1950x700 | | | | 1 | | | | | | | | |
| 33 | 6009991017 | Encimera inox. Gastronorma, pre-instalación, 2400x700 | | | | | 1 | | | | | | | |
| 35 | 6009991100 | Decorativo encimera, aluminio 1345x55 | | 1 | | | | 2 | | | | | | |
| 35 | 6009991102 | Decorativo encimera, aluminio 1795x55 | | | 1 | | | | 2 | | | | | |
| 35 | 6009991104 | Decorativo encimera, aluminio 2245x55 | | | | 1 | | | | 2 | | | | |
| 35 | 6009991106 | Decorativo encimera, aluminio 2695x55 | | | | | 1 | | | | 2 | | | |
| 36 | 6009991133 | Techo interior, aluminio 1275x540 | | | 1 | | | | 1 | | | | | |
| 36 | 6009991136 | Techo interior, aluminio 1730x540 | | | | 1 | | | | 1 | | | | |
| 36 | 6009991139 | Techo interior, aluminio 2020x540 | | | | | 1 | | | | 1 | | | |
| 36 | 6009991142 | Techo interior, aluminio 830x540 | | 1 | | | | 1 | | | | | | |
| 37 | 6009991202 | Aislamiento techo interior, porexpan 1310x566x30 | | | 1 | | | | 1 | | | | | |
| 37 | 6009991205 | Aislamiento techo interior, porexpan 1760x566x30 | | | | 1 | | | | 1 | | | | |
| 37 | 6009991208 | Aislamiento techo interior, porexpan 2110x566x30 | | | | | 1 | | | | 1 | | | |
| 37 | 6009991211 | Aislamiento techo interior, porexpan 860x566x30 | | 1 | | | | 1 | | | | | | |
| 39 | 6009990041 | Cuadro de mandos desmontable remoto comun Snack - Pasteleria - GN 1/1, pre-instalación | | 1 | 1 | 1 | 1 | 2 | 2 | 2 | 2 | | | |
| 40 | 6009990052 | Lateral desmontable mesa GN remoto, | | 1 | 1 | 1 | 1 | 1 | 1 | 1 | 1 | | | |
| 41 | 6001801003 | Estante parrilla GN 1/1, 325x530 | | 2 | 3 | 4 | 5 | 2 | 3 | 4 | 5 | | | |
| 42 | 6001507041 | Interruptor paro ventilador tiro forzado (MESAS FRIAS), Pulsador 1005172 NA/M14,2S4,BM | | 1 | 1 | 1 | 1 | 2 | 2 | 2 | 2 | | | |
| 47 | 6001508003 | Resistencia marco puerta Gastro-1, 10 W x m, 1970+600 | | 1 | 1 | 1 | 1 | 2 | 2 | 2 | 2 | | | |
| 47 | 6001508004 | Resistencia marco puerta Gastro-2, 10 W x m, 1970+200+600 | | 1 | 2 | 3 | 4 | 2 | 4 | 6 | 8 | | | |
| 48 | 6002000057 | Sonda termostato, NTC 938 Ohm | | 1 | 1 | 1 | 1 | 1 | 1 | 1 | 1 | | | |
| 134 | 6005510265 | Decorativo mesa fria GN 1/1 preinstalación apertura derecha, inox satinado 1044x45 | | 1 | | | | 1 | | | | | | |
| 134 | 6005510266 | Decorativo mesa fria GN 1/1 preinstalación apertura derecha, inox satinado 1494x45 | | | 1 | | | | 1 | | | | | |
| 134 | 6005510267 | Decorativo mesa fria GN 1/1 preinstalación apertura derecha, inox satinado 1944x45 | | | | 1 | | | | 1 | | | | |
| 134 | 6005510268 | Decorativo mesa fria GN 1/1 preinstalación apertura derecha, inox satinado 2394x45 | | | | | 1 | | | | 1 | | | |
| 134 | 6005510257 | Decorativo mesa fria GN 1/1 preinstalación apertura izquierda, inox satinado 1044x45 | | 1 | | | | 1 | | | | | | |

FAGOR
FAGOFRI SA

## PLANO DESPIECE

| | FAGOFRI Código | MATERIAL | DSP-0144 MFP-102-GN/R 1 | DSP-0144 MFP-147-GN/R 1 | DSP-0144 MFP-192-GN/R 1 | DSP-0144 MFP-237-GN/R 1 | DSP-0144 MCP-102-GN/R 1 | DSP-0144 MCP-147-GN/R 1 | DSP-0144 MCP-192-GN/R 1 | DSP-0144 MCP-237-GN/R 1 | DSP-0160 C GN-2x1/2 1 | DSP-0161 C GN-3x1/3 1 | DSP-0162 C GN-1/3+2/3 1 |
|---|---|---|---|---|---|---|---|---|---|---|---|---|---|
| 134 | 6005510258 | Decorativo mesa fria GN 1/1 preinstalación apertura izquierda, inox satinado 1494x45 | | 1 | | | | 1 | | | | | |
| 134 | 6005510259 | Decorativo mesa fria GN 1/1 preinstalación apertura izquierda, inox satinado 1944x45 | | | 1 | | | | 1 | | | | |
| 134 | 6005510260 | Decorativo mesa fria GN 1/1 preinstalación apertura izquierda, inox satinado 2394x45 | | | | 1 | | | | 1 | | | |
| A | 6009990604 | Frente cajón refrigerado GN-100, 435x210 | | | | | | | | | | 3 | 1 |
| A | 6009990603 | Frente cajón refrigerado GN-200, 435x315 | | | | | | | | | 2 | | |
| B | 6001401115 | Burlete frente cajón GN 1/1-100, 400x175 | | | | | | | | | | 3 | 1 |
| B | 6001401107 | Burlete frente cajón GN 1/1-200, 400x280 | | | | | | | | | 2 | | |
| C | 6000201008 | Fijación Fronti Horizontal Cajonera Refrigerada, | | | | | | | | | 4 | 6 | 4 |
| D | 6009990613 | Fronti (completo) separador cajones GN COMÚN, 345x95x60 | | | | | | | | | 1 | 2 | 1 |
| E | 6005520192 | Cuerpo cajón GN 1/1-100, 300x555x100 | | | | | | | | | | 3 | 1 |
| E | 6005520190 | Cuerpo cajón GN 1/1-200, 300x555x190 | | | | | | | | | 2 | | |
| F | 6003001010 | Guia telescópica desmontable inox GN 1/1, | | | | | | | | | 2 | 3 | 2 |
| G | 6009990605 | Frente cajón refrigerado GN-300, 435x420 | | | | | | | | | | | 1 |
| H | 6009990612 | Burlete frente cajón GN 1/1-300, 400x390 | | | | | | | | | | | 1 |
| I | 6005520193 | Cuerpo cajón GN 1/1-300, 300x555x290 | | | | | | | | | | | 1 |

FAGOR
FAGOFRI SA

## PLANO DESPIECE

| | FAGOFRI Código | MATERIAL | MODELO | DSP-0144 MFN-102-GN/R | DSP-0144 MFN-147-GN/R | DSP-0144 MFN-192-GN/R | DSP-0144 MFN-237-GN/R | DSP-0144 MCN-102-GN/R | DSP-0144 MCN-147-GN/R | DSP-0144 MCN-192-GN/R | DSP-0144 MCN-237-GN/R | DSP-0160 C GN-2x1/2 | DSP-0161 C GN-3x1/3 | DSP-0162 C GN-1/3+2/3 |
|---|---|---|---|---|---|---|---|---|---|---|---|---|---|---|
| | | | | 1 | 1 | 1 | 1 | 1 | 1 | 1 | 1 | 1 | 1 | 1 |
| 3 | 6001911005 | Condensador, 10x4 derecha techo | | 1 | 1 | | | | | | | | | |
| 4 | 6001903001 | Evaporador, Bateria FC-61-B | | 1 | 1 | | | 1 | 1 | | | | | |
| 4 | 6001903003 | Evaporador, Bateria FC-71-B | | | | 1 | 1 | | | 1 | 1 | | | |
| 5 | 6004000011 | Ventilador Evaporador FC-61-B / FC-62-B, 5 w con pala y aro GC | | 1 | 1 | | | 1 | 1 | | | | | |
| 5 | 6004000012 | Ventilador Evaporador FC-71-B / FC-72-B, 10 w con pala y aro GC | | | | 1 | 1 | | | 1 | 1 | | | |
| 6 | 6004000013 | Rejilla protección ventilador evaporador FC, Alambre Ø 200 | | 1 | 1 | | | 1 | 1 | | | | | |
| 6 | 6004000014 | Rejilla protección ventilador evaporador FC, Alambre Ø 250 | | | | 1 | 1 | | | 1 | 1 | | | |
| 7 | 6001507043 | Control digital mant. congelados, Carel PJ32SE (12 v, 4 botones, 4 reles) | | 1 | 1 | 1 | 1 | 1 | 1 | 1 | 1 | | | |
| 7 | 6001507012 | Control digital mant. congelados, ELIWELL EWPC 974 con sondas y tranformador | | 1 | 1 | 1 | 1 | 1 | 1 | 1 | 1 | | | |
| 7 | 6001507042 | Control digital mant. congelados, ELIWELL EWPX-174 con sondas y transformador | | 1 | 1 | 1 | 1 | 1 | 1 | 1 | 1 | | | |
| 8 | 6001507003 | Interruptor general on / off, BIPOLAR N/ABMAR 220 V. IB4-3106 | | 1 | 1 | 1 | 1 | 1 | 1 | 1 | 1 | | | |
| 9 | 6001507005 | Piloto funcionamiento compresor, L-312 Ø13 mm 220 V AMBAR | | 1 | 1 | 1 | 1 | 1 | 1 | 1 | 1 | | | |
| 12 | | Bandeja goteo evaporador FC-61-B mesa fria, Aluminio | | 1 | 1 | | | 1 | 1 | | | | | |
| 12 | 6004000017 | Bandeja goteo evaporador FC-71-B mesa fria, Aluminio | | | | 1 | 1 | | | 1 | 1 | | | |
| 14 | 6009990360 | Conjunto pata regulable Mesa Fria, Estanteria y Mesa Cafetera, ø50x107 / 147 | | 4 | 4 | 4 | 6 | 4 | 4 | 4 | 6 | | | |
| 15 | 6002501002 | Base lateral apoyo mesa Gastronorma, zincado 600x100 | | 1 | 1 | 1 | 1 | 1 | 1 | 1 | 1 | | | |
| 16 | 6009992206 | Juego bisagra mesa fria apertura derecha tirador horizontal, | | 2 | 3 | 4 | 5 | 2 | 3 | 4 | 5 | | | |
| 16 | 6009992204 | Juego bisagra mesa fria apertura derecha tirador vertical, | | 2 | 3 | 4 | 5 | 2 | 3 | 4 | 5 | | | |
| 16 | 6009992205 | Juego bisagra mesa fria apertura izquierda tirador horizontal, | | 2 | 3 | 4 | 5 | 2 | 3 | 4 | 5 | | | |
| 16 | 6009992203 | Juego bisagra mesa fria apertura izquierda tirador vertical, | | 2 | 3 | 4 | 5 | 2 | 3 | 4 | 5 | | | |
| 17 | 6000202237 | Soporte rejilla cuadro de mandos, | | 2 | 3 | 4 | 5 | 2 | 3 | 4 | 5 | | | |
| 20 | 6009990037 | Juego guias estante parrilla interior (central), Gastronorma 1/1 "U" 605 mm | | | | | | 4 | 6 | 8 | 10 | | | |
| 20 | 6009990002 | Juego guias estante parrilla interior, Gastronorma 1/1 "U" 550 mm | | 4 | 6 | 8 | 10 | | | | | | | |
| 23 | 6009990225 | Cremallera lateral trasera, mesa GN 1/1 | | 2 | 2 | 2 | 2 | | | | | | | |
| 24 | 6009990226 | Cremallera central trasera, mesa GN 1/1 | | 1 | 2 | 3 | 4 | | | | | | | |
| 25 | 6009990218 | Cremallera delantera, mesa fria Snack / Pasteleria / GN 1/1 | | 4 | 6 | 8 | 10 | 8 | 12 | 16 | 20 | | | |
| 27 | 6001401101 | Burlete puerta mesa GN, 400x605 UR-260-M | | 2 | 3 | 4 | 5 | 2 | 3 | 4 | 5 | | | |
| 29 | 6009990178 | Puerta mesa GN apertura derecha mant cong tirador horizontal, 435x640 | | 2 | 3 | 4 | 5 | 2 | 3 | 4 | 5 | | | |
| 29 | 6009990177 | Puerta mesa GN apertura derecha mant cong tirador vertical, 435x640 | | 2 | 3 | 4 | 5 | 2 | 3 | 4 | 5 | | | |
| 29 | 6009990176 | Puerta mesa GN apertura izquierda mant cong tirador horizontal, 435x640 | | 2 | 3 | 4 | 5 | 2 | 3 | 4 | 5 | | | |
| 29 | 6009990014 | Puerta mesa GN apertura izquierda mant cong tirador vertical, 435x640 | | 2 | 3 | 4 | 5 | 2 | 3 | 4 | 5 | | | |
| 33 | 6009991019 | Encimera inox. Gastronorma central, pre-instalación, 1050x760 | | | | | | 1 | | | | | | |
| 33 | 6009991021 | Encimera inox. Gastronorma central, pre-instalación, 1500x760 | | | | | | | 1 | | | | | |
| 33 | 6009991023 | Encimera inox. Gastronorma central, pre-instalación, 1950x760 | | | | | | | | 1 | | | | |

FAGOR
FAGOFRI SA

## PLANO DESPIECE

| | FAGOFRI Código | MATERIAL | MODELO | DSP-0144 MFN-102-GN/R | DSP-0144 MFN-147-GN/R | DSP-0144 MFN-192-GN/R | DSP-0144 MFN-237-GN/R | DSP-0144 MCN-102-GN/R | DSP-0144 MCN-147-GN/R | DSP-0144 MCN-192-GN/R | DSP-0144 MCN-237-GN/R | DSP-0160 C GN-2x1/2 | DSP-0161 C GN-3x1/3 | DSP-0162 C GN-1/3+2/3 |
|---|---|---|---|---|---|---|---|---|---|---|---|---|---|---|
| | | | | 1 | 1 | 1 | 1 | 1 | 1 | 1 | 1 | 1 | 1 | 1 |
| 33 | 6009991025 | Encimera inox. Gastronorma central, pre-instalación, 2400x760 | | | | | | | | | 1 | | | |
| 33 | 6009991305 | Encimera inox. Gastronorma especial pre-instalación, 1050x700 peto 100 mm | | 1 | | | | | | | | | | |
| 33 | 6009991166 | Encimera inox. Gastronorma especial pre-instalación, 1050x700 peto 45 mm | | 1 | | | | | | | | | | |
| 33 | 6009991306 | Encimera inox. Gastronorma especial pre-instalación, 1500x700 peto 100 mm | | | 1 | | | | | | | | | |
| 33 | 6009991168 | Encimera inox. Gastronorma especial pre-instalación, 1500x700 peto 45 mm | | | 1 | | | | | | | | | |
| 33 | 6009991307 | Encimera inox. Gastronorma especial pre-instalación, 1950x700 peto 100 mm | | | | 1 | | | | | | | | |
| 33 | 6009991170 | Encimera inox. Gastronorma especial pre-instalación, 1950x700 peto 45 mm | | | | 1 | | | | | | | | |
| 33 | 6009991308 | Encimera inox. Gastronorma especial pre-instalación, 2400x700 peto 100 mm | | | | | 1 | | | | | | | |
| 33 | 6009991172 | Encimera inox. Gastronorma especial pre-instalación, 2400x700 peto 45 mm | | | | | 1 | | | | | | | |
| 33 | 6009991011 | Encimera inox. Gastronorma, pre-instalación, 1050x700 | | 1 | | | | | | | | | | |
| 33 | 6009991013 | Encimera inox. Gastronorma, pre-instalación, 1500x700 | | | 1 | | | | | | | | | |
| 33 | 6009991015 | Encimera inox. Gastronorma, pre-instalación, 1950x700 | | | | 1 | | | | | | | | |
| 33 | 6009991017 | Encimera inox. Gastronorma, pre-instalación, 2400x700 | | | | | 1 | | | | | | | |
| 35 | 6009991100 | Decorativo encimera, aluminio 1345x55 | | 1 | | | | 1 | | | | | | |
| 35 | 6009991102 | Decorativo encimera, aluminio 1795x55 | | | 1 | | | | 1 | | | | | |
| 35 | 6009991104 | Decorativo encimera, aluminio 2245x55 | | | | 1 | | | | 1 | | | | |
| 35 | 6009991106 | Decorativo encimera, aluminio 2695x55 | | | | | 1 | | | | 1 | | | |
| 36 | 6009991133 | Techo interior, aluminio 1275x540 | | | 1 | | | | 1 | | | | | |
| 36 | 6009991136 | Techo interior, aluminio 1730x540 | | | | 1 | | | | 1 | | | | |
| 36 | 6009991139 | Techo interior, aluminio 2020x540 | | | | | 1 | | | | 1 | | | |
| 36 | 6009991142 | Techo interior, aluminio 830x540 | | 1 | | | | 1 | | | | | | |
| 37 | 6009991202 | Aislamiento techo interior, porexpan 1310x566x30 | | | 1 | | | | 1 | | | | | |
| 37 | 6009991205 | Aislamiento techo interior, porexpan 1760x566x30 | | | | 1 | | | | 1 | | | | |
| 37 | 6009991208 | Aislamiento techo interior, porexpan 2110x566x30 | | | | | 1 | | | | 1 | | | |
| 37 | 6009991211 | Aislamiento techo interior, porexpan 860x566x30 | | 1 | | | | 1 | | | | | | |
| 39 | 6009990041 | Cuadro de mandos desmontable remoto comun Snack - Pasteleria - GN 1/1, pre-instalación | | 1 | 1 | 1 | 1 | 1 | 1 | 1 | 1 | | | |
| 40 | 6009990052 | Lateral desmontable mesa GN remoto, | | 1 | 1 | 1 | 1 | 1 | 1 | 1 | 1 | | | |
| 41 | 6001801003 | Estante parrilla GN 1/1, 325x530 | | 2 | 3 | 4 | 5 | 2 | 3 | 4 | 5 | | | |
| 42 | 6001507041 | Interruptor paro ventilador tiro forzado (MESAS FRIAS), Pulsador 1005172 NA/M14,2S4,BM | | 1 | 1 | 1 | 1 | 2 | 2 | 2 | 2 | | | |
| 47 | 6001508003 | Resistencia marco puerta Gastro-1, 10 W x m, 1970+600 | | 1 | 1 | 1 | 1 | 2 | 2 | 2 | 2 | | | |
| 47 | 6001508004 | Resistencia marco puerta Gastro-2, 10 W x m, 1970+200+600 | | 1 | 2 | 3 | 4 | 2 | 4 | 6 | 8 | | | |
| 48 | 6002000057 | Sonda termostato, NTC 938 Ohm | | 2 | 2 | 2 | 2 | 2 | 2 | 2 | 2 | | | |
| 117 | 6001508011 | Resistencia bandeja goteo evaporador, 18 w | | 1 | 1 | 1 | 1 | 1 | 1 | 1 | 1 | | | |
| 117 | 6001508021 | Resistencia descarche evaporador 61 - 71, 350 w cable corto | | 1 | 1 | 1 | 1 | 1 | 1 | 1 | 1 | | | |

FAGOR
FAGOFRI SA

## PLANO DESPIECE

| | FAGOFRI Código | MATERIAL | DSP-0144 MFN-102-GN/R | DSP-0144 MFN-147-GN/R | DSP-0144 MFN-192-GN/R | DSP-0144 MFN-237-GN/R | DSP-0144 MCN-102-GN/R | DSP-0144 MCN-147-GN/R | DSP-0144 MCN-192-GN/R | DSP-0144 MCN-237-GN/R | DSP-0160 C GN-2x1/2 | DSP-0161 C GN-3x1/3 | DSP-0162 C GN-1/3+2/3 |
|---|---|---|---|---|---|---|---|---|---|---|---|---|---|
| MODELO | | | 1 | 1 | 1 | 1 | 1 | 1 | 1 | 1 | 1 | 1 | 1 |
| 134 | 6005510265 | Decorativo mesa fria GN 1/1 preinstalación apertura derecha, inox satinado 1044x45 | 1 | | | | 1 | | | | | | |
| 134 | 6005510266 | Decorativo mesa fria GN 1/1 preinstalación apertura derecha, inox satinado 1494x45 | | 1 | | | | 1 | | | | | |
| 134 | 6005510267 | Decorativo mesa fria GN 1/1 preinstalación apertura derecha, inox satinado 1944x45 | | | 1 | | | | 1 | | | | |
| 134 | 6005510268 | Decorativo mesa fria GN 1/1 preinstalación apertura derecha, inox satinado 2394x45 | | | | 1 | | | | 1 | | | |
| 134 | 6005510257 | Decorativo mesa fria GN 1/1 preinstalación apertura izquierda, inox satinado 1044x45 | 1 | | | | 1 | | | | | | |
| 134 | 6005510258 | Decorativo mesa fria GN 1/1 preinstalación apertura izquierda, inox satinado 1494x45 | | 1 | | | | 1 | | | | | |
| 134 | 6005510259 | Decorativo mesa fria GN 1/1 preinstalación apertura izquierda, inox satinado 1944x45 | | | 1 | | | | 1 | | | | |
| 134 | 6005510260 | Decorativo mesa fria GN 1/1 preinstalación apertura izquierda, inox satinado 2394x45 | | | | 1 | | | | 1 | | | |
| A | 6009990604 | Frente cajón refrigerado GN-100, 435x210 | | | | | | | | | | 3 | 1 |
| A | 6009990603 | Frente cajón refrigerado GN-200, 435x315 | | | | | | | | | 2 | | |
| B | 6001401115 | Burlete frente cajón GN 1/1-100, 400x175 | | | | | | | | | | 3 | 1 |
| B | 6001401107 | Burlete frente cajón GN 1/1-200, 400x280 | | | | | | | | | 2 | | |
| C | 6000201008 | Fijación Fronti Horizontal Cajonera Refrigerada, | | | | | | | | | 4 | 6 | 4 |
| D | 6009990613 | Fronti (completo) separador cajones GN COMÚN, 345x95x60 | | | | | | | | | 1 | 2 | 1 |
| E | 6005520192 | Cuerpo cajón GN 1/1-100, 300x555x100 | | | | | | | | | | 3 | 1 |
| E | 6005520190 | Cuerpo cajón GN 1/1-200, 300x555x190 | | | | | | | | | 2 | | |
| F | 6003001010 | Guia telescópica desmontable inox GN 1/1, | | | | | | | | | 2 | 3 | 2 |
| G | 6009990605 | Frente cajón refrigerado GN-300, 435x420 | | | | | | | | | | | 1 |
| H | 6009990612 | Burlete frente cajón GN 1/1-300, 400x390 | | | | | | | | | | | 1 |
| I | 6005520193 | Cuerpo cajón GN 1/1-300, 300x555x290 | | | | | | | | | | | 1 |