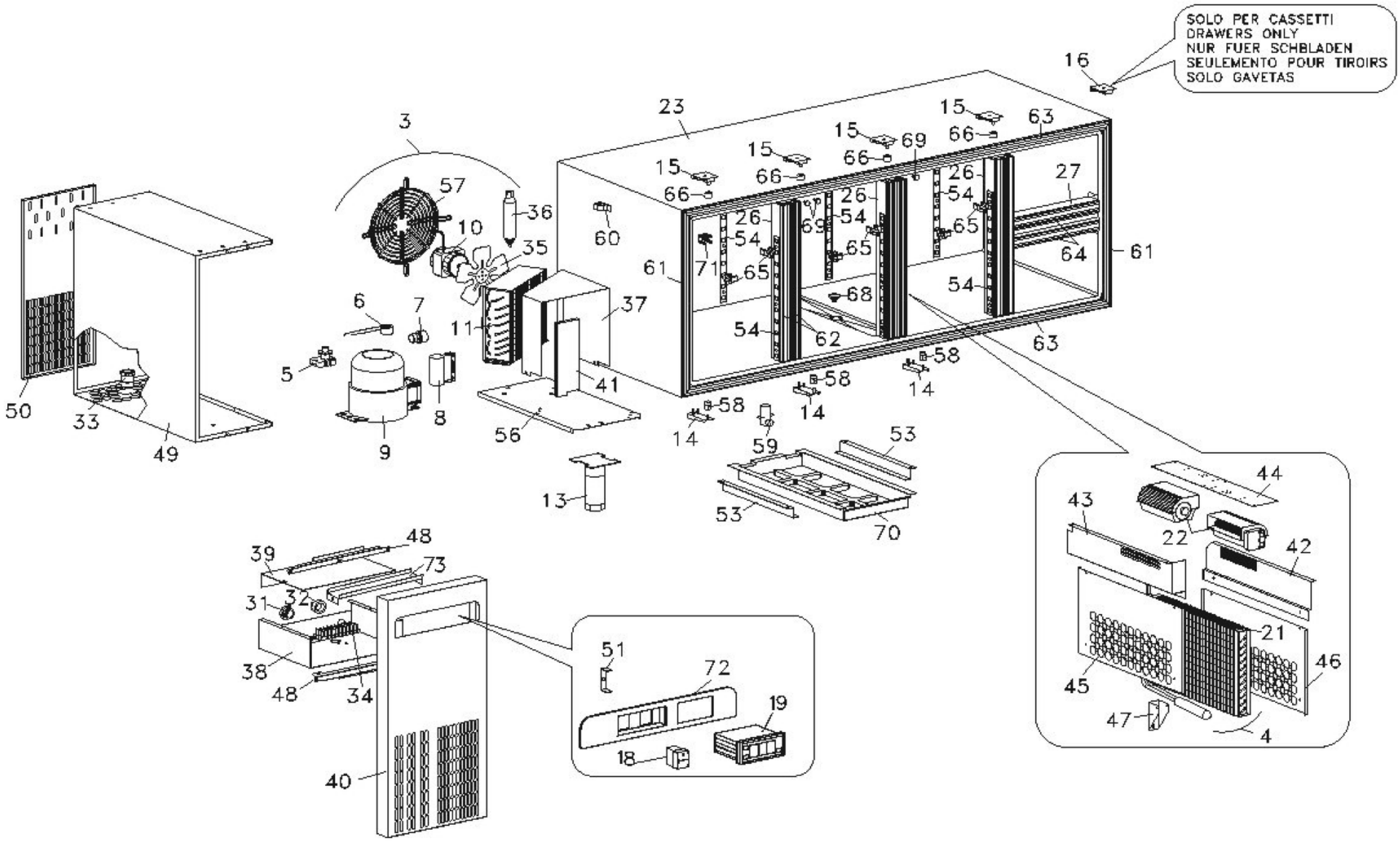
SOLO PER CASSETTI
DRAWERS ONLY
NUR FUER SCHBLADEN
SEULEMENTO POUR TIROIRS
SOLO GAVETAS

# Modello Typ Model Modele Modelo

| | | EM1A<br>EM1A/X<br>EM1A/A | EM1A/2<br>EM1A/2X<br>EM1A/2A | EM1B<br>EM1B/X<br>EM1B/A | EM1B/2<br>EM1B/2X<br>EM1B/2A | EM1B/4<br>EM1B/4X<br>EM1B/4A | EM1C<br>EM1C/X<br>EM1C/A | EM1C/2<br>EM1C/2X<br>EM1C/2A | EM1C/4<br>EM1C/4X<br>EM1C/4A | EM1C/6<br>EM1C/6X<br>EM1C/6A |
|---|---|---|---|---|---|---|---|---|---|---|
| Porte<br>Ture<br>Doors<br>Portes<br>Portas<br>Gabetas | SX | 1 | 1 | 2 | 2 | 1 | 3 | 3 | 2 | 1 |
| | DX | 1 | ... | 1 | ... | ... | 1 | ... | ... | ... |

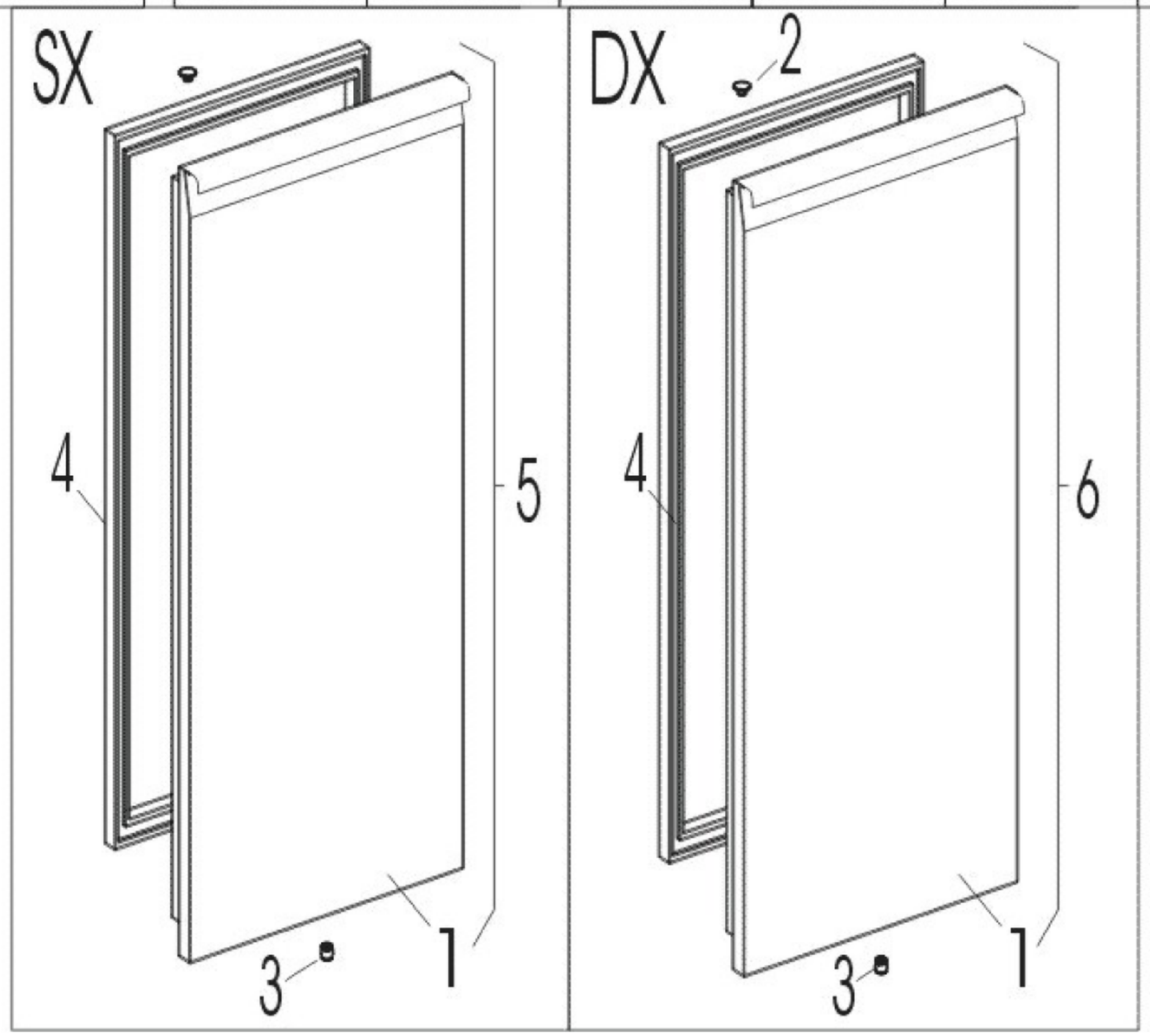

# Modello Typ Model Modele Modelo

| | | EM1A<br>EM1A/X<br>EM1A/A | EM1A/2<br>EM1A/2X<br>EM1A/2A | EM1B<br>EM1B/X<br>EM1B/A | EM1B/2<br>EM1B/2X<br>EM1B/2A | EM1B/4<br>EM1B/4X<br>EM1B/4A | EM1C<br>EM1C/X<br>EM1C/A | EM1C/2<br>EM1C/2X<br>EM1C/2A | EM1C/4<br>EM1C/4X<br>EM1C/4A | EM1C/6<br>EM1C/6X<br>EM1C/6A |
|---|---|---|---|---|---|---|---|---|---|---|
| Num. Cassetti<br>Schublad<br>Drawers<br>Tiroirs<br>Gabetas | 1/2 | - | 2 | - | 2 | 4 | - | 2 | 4 | 6 |

