lamber

BEHA HEDO INDUSTRIER A/S

L25-dy standard marina

Ed. 01/2015

Rev. L

Dishwashers

L25-dy standard/marina

SPARE PARTS

CE

lamber	WASH COMPONENTS	MOD. L25-dy standard/marina	TAV. 1 L ED. 01/2015

TAV. 1 DI 7

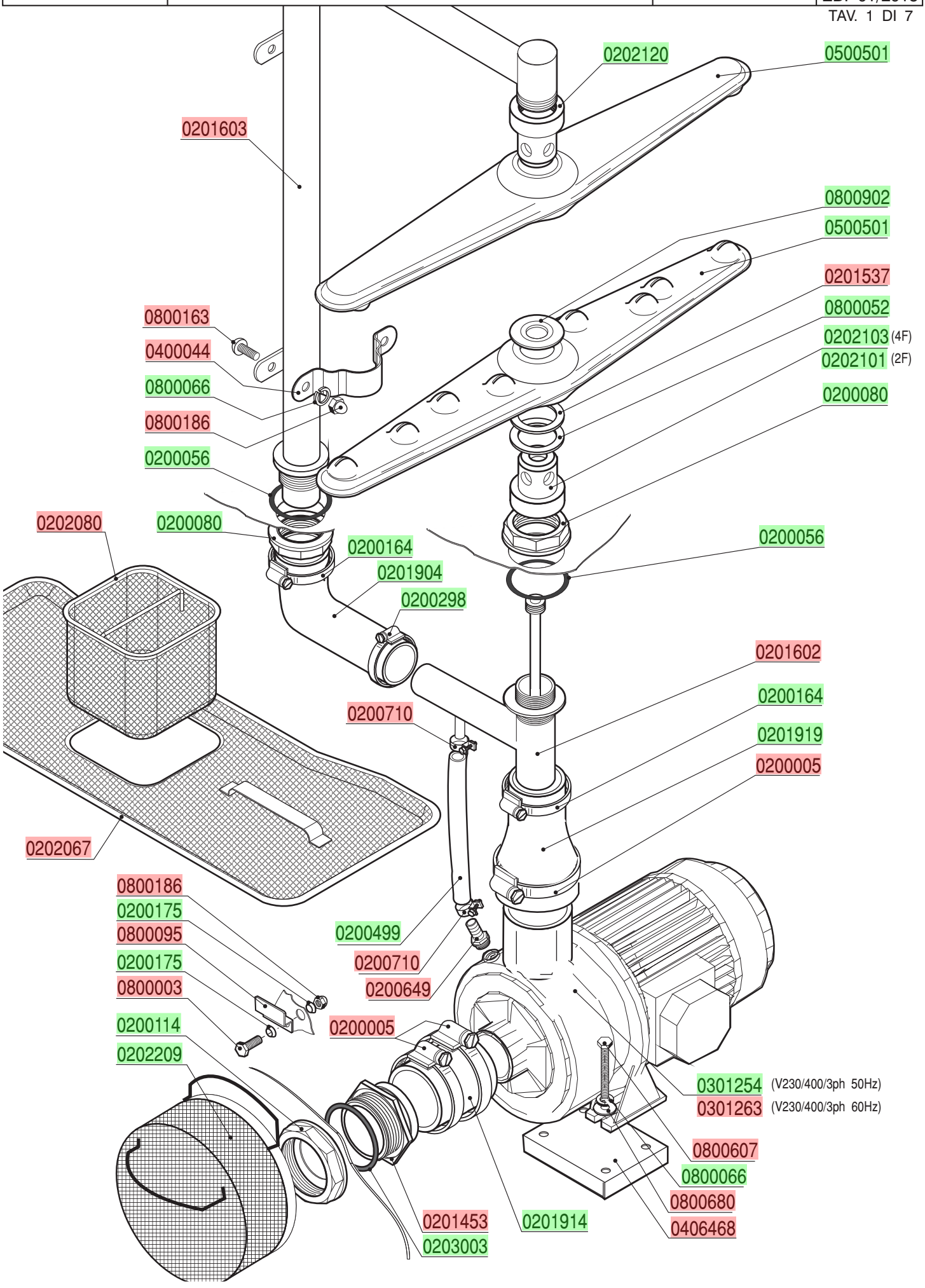

lamber	TANK COMPONENTS	MOD. **L25-dy standard/marina**	TAV. **2 L** ED. 01/2015

TAV. 2 DI 7

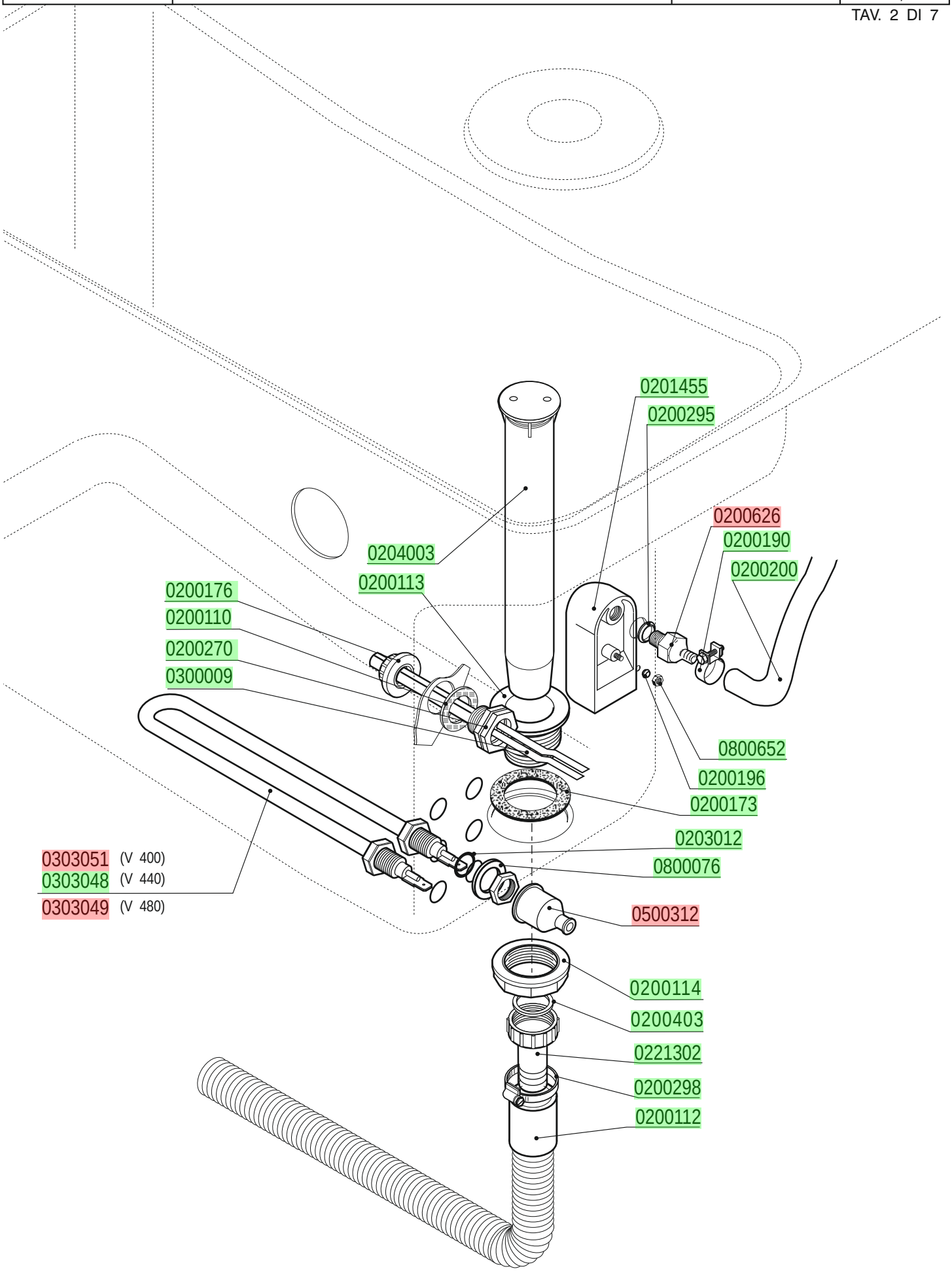

lamber	RINSE COMPONENTS	MOD. L25-dy standard/marina	TAV. 3 L ED. 01/2015

R01-2016 TAV. 3 DI 7

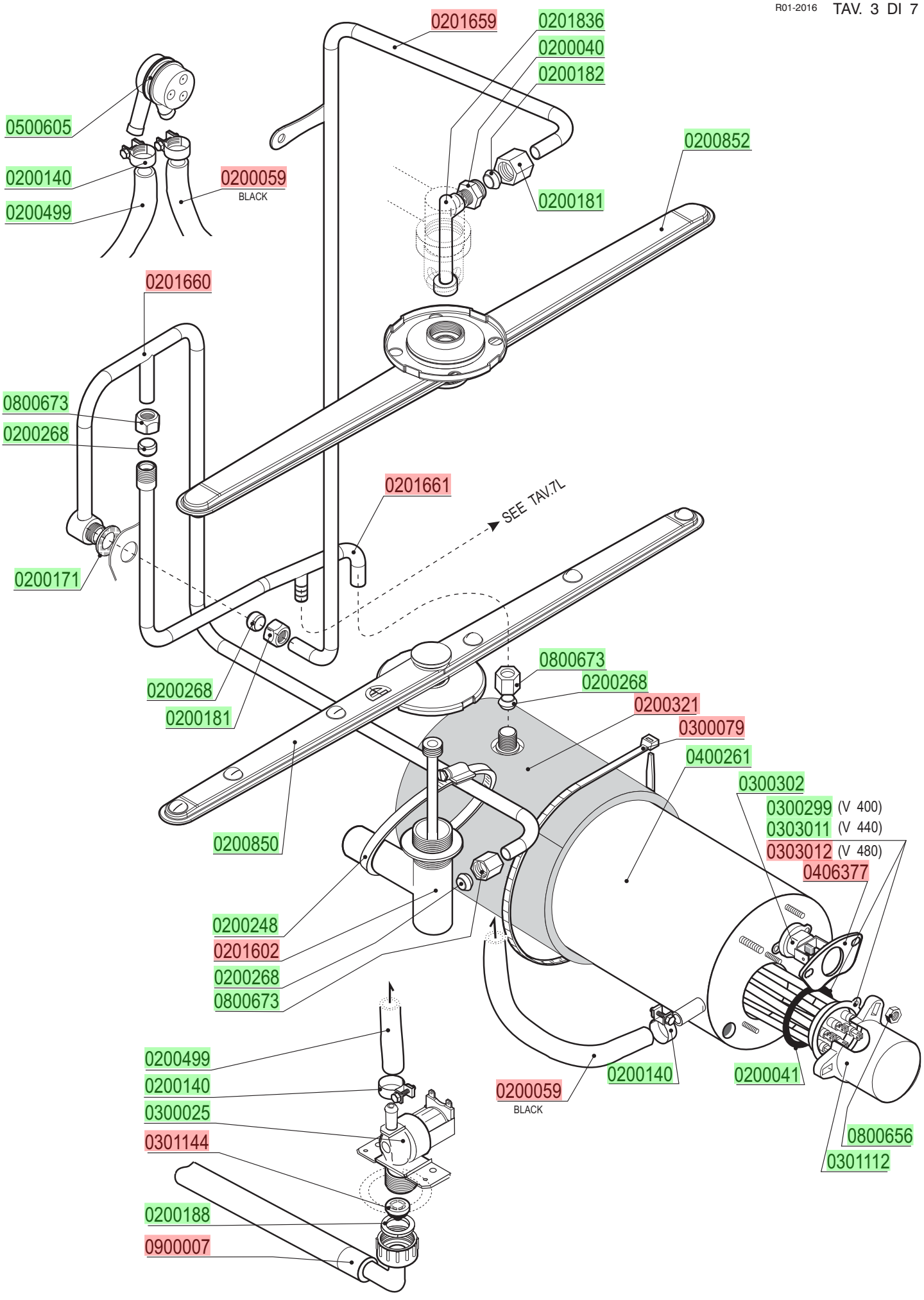

lamber	CONTROL BOX	MOD. L25-dy marina	TAV. 4 L ED. 01/2015

TAV. 4 DI 7

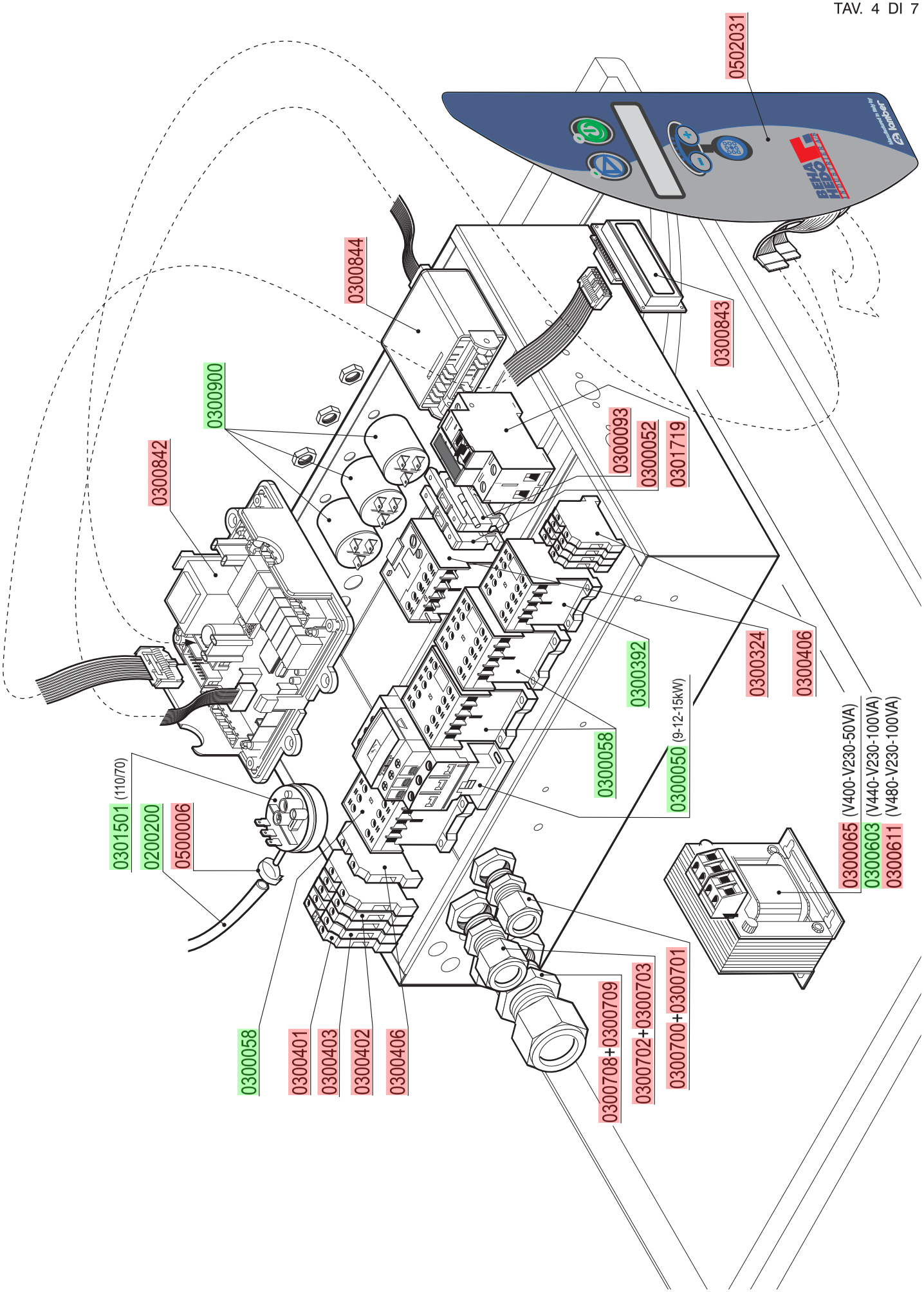

lamber	LIFTING COMPONENTS	MOD. L25-dy standard/marina	TAV. 5 L ED. 01/2015

TAV. 5 DI 7

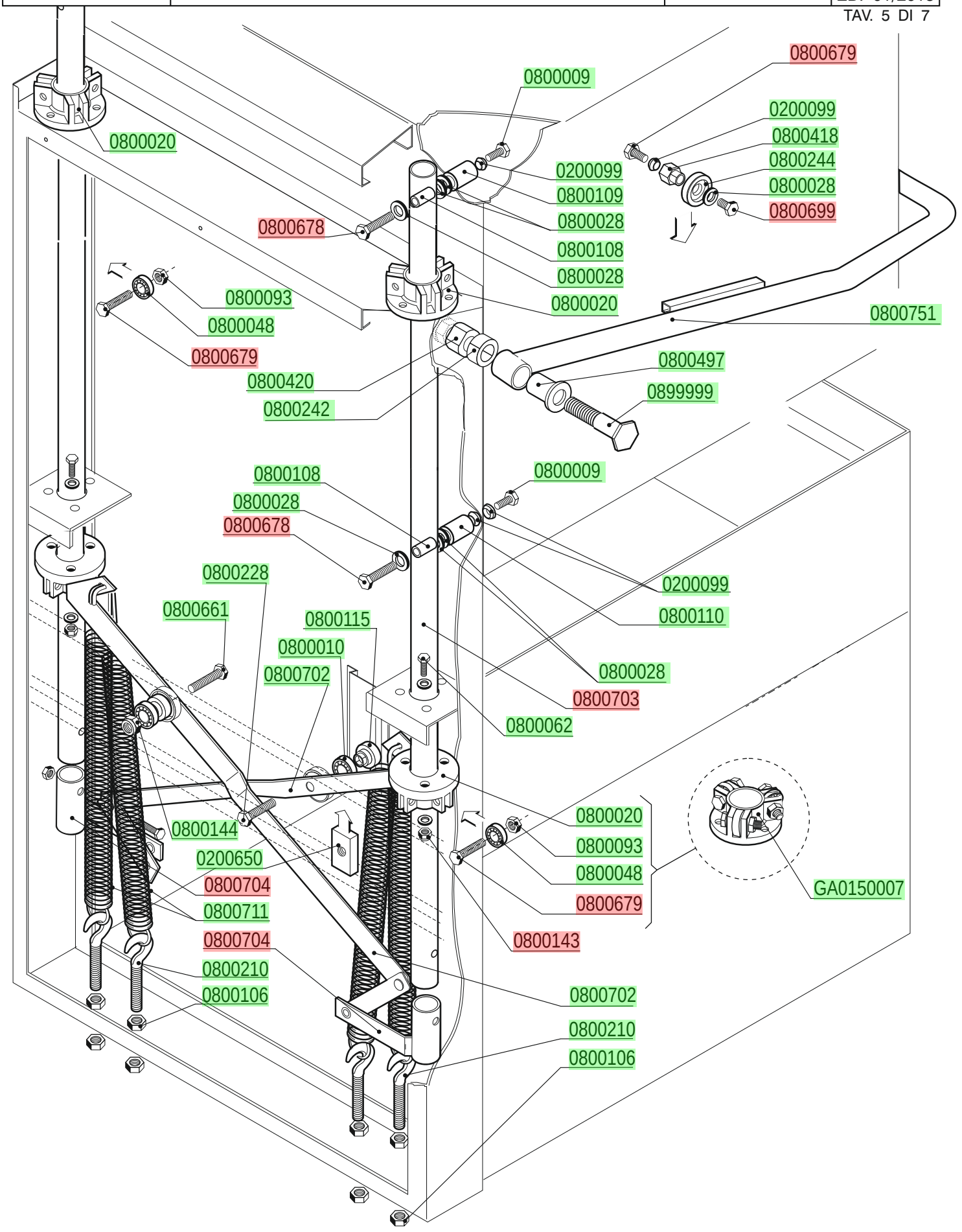

lamber	HOOD	MOD. L25-dy standard/marina	TAV. 6 L ED. 01/2015

TAV. 6 DI 7

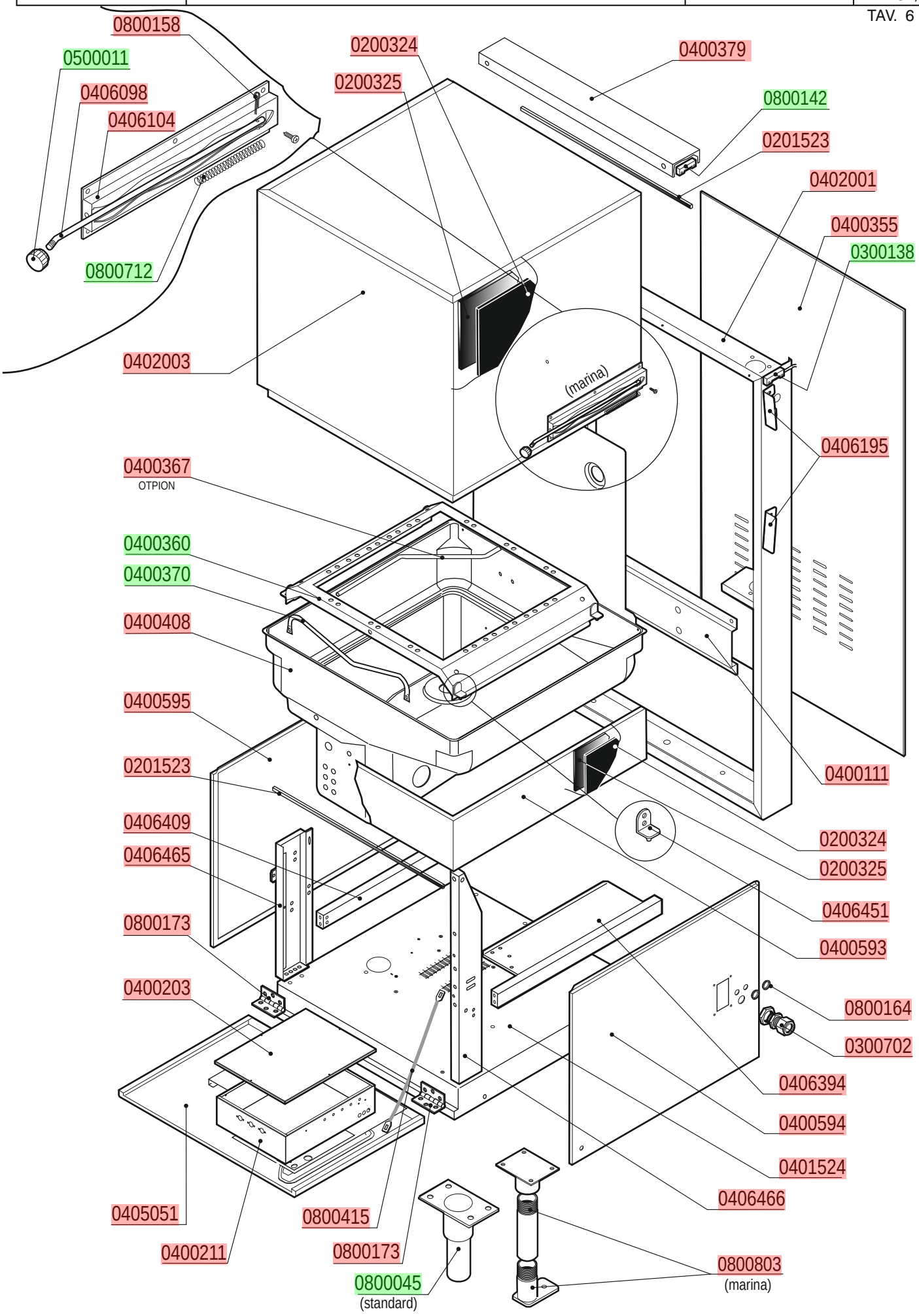

DETERGENT PUMP

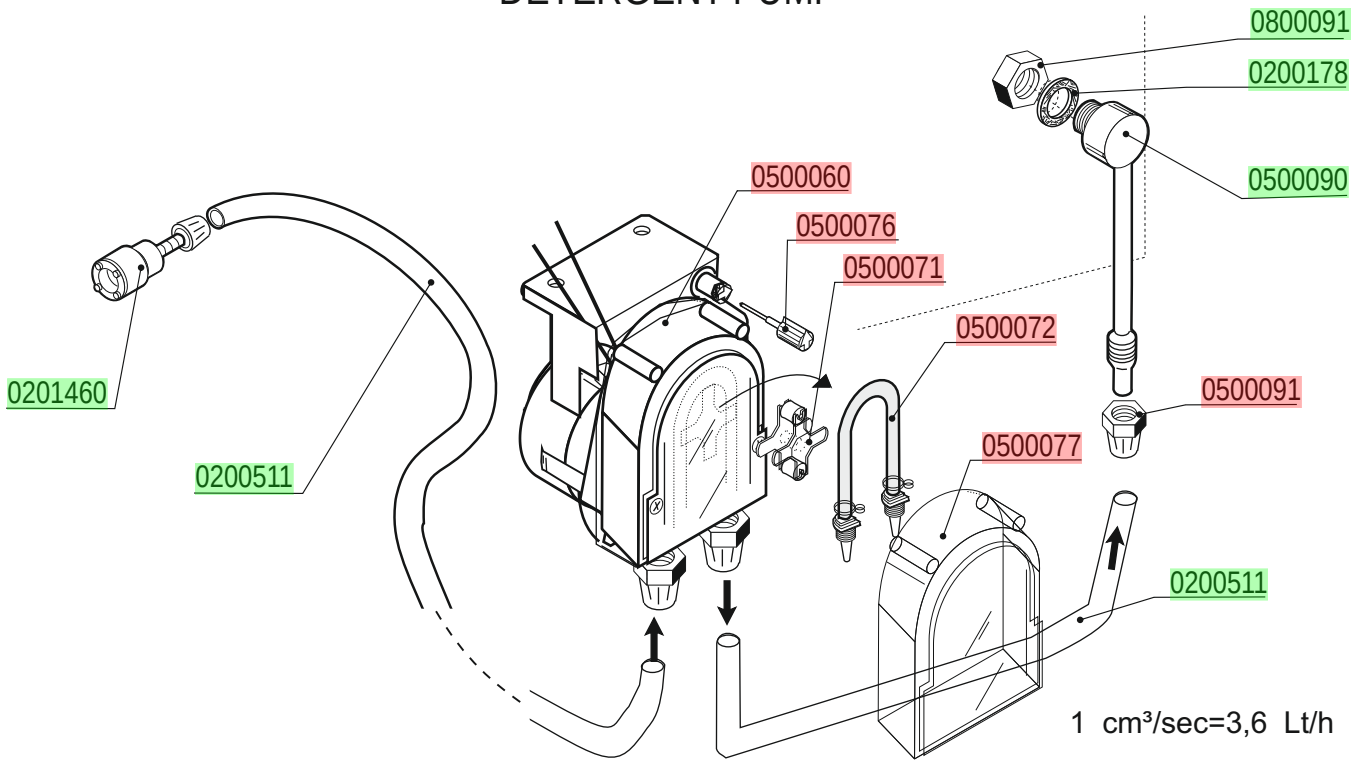

RINSE AID DISPENSER

