DESPIECE TECNICO

Freidoras a gas
Gas deep fat fryers
Friteuses a gaz
Gas-fritteusen
Friggitrici a gas
Fritadeiras a gás

GAMA 900

Modelos:

FG9-05 AD
FG9-10 AD
FG9-05 S AD

Noviembre 2011 November

FAGOR

FAGOR INDUSTRIAL

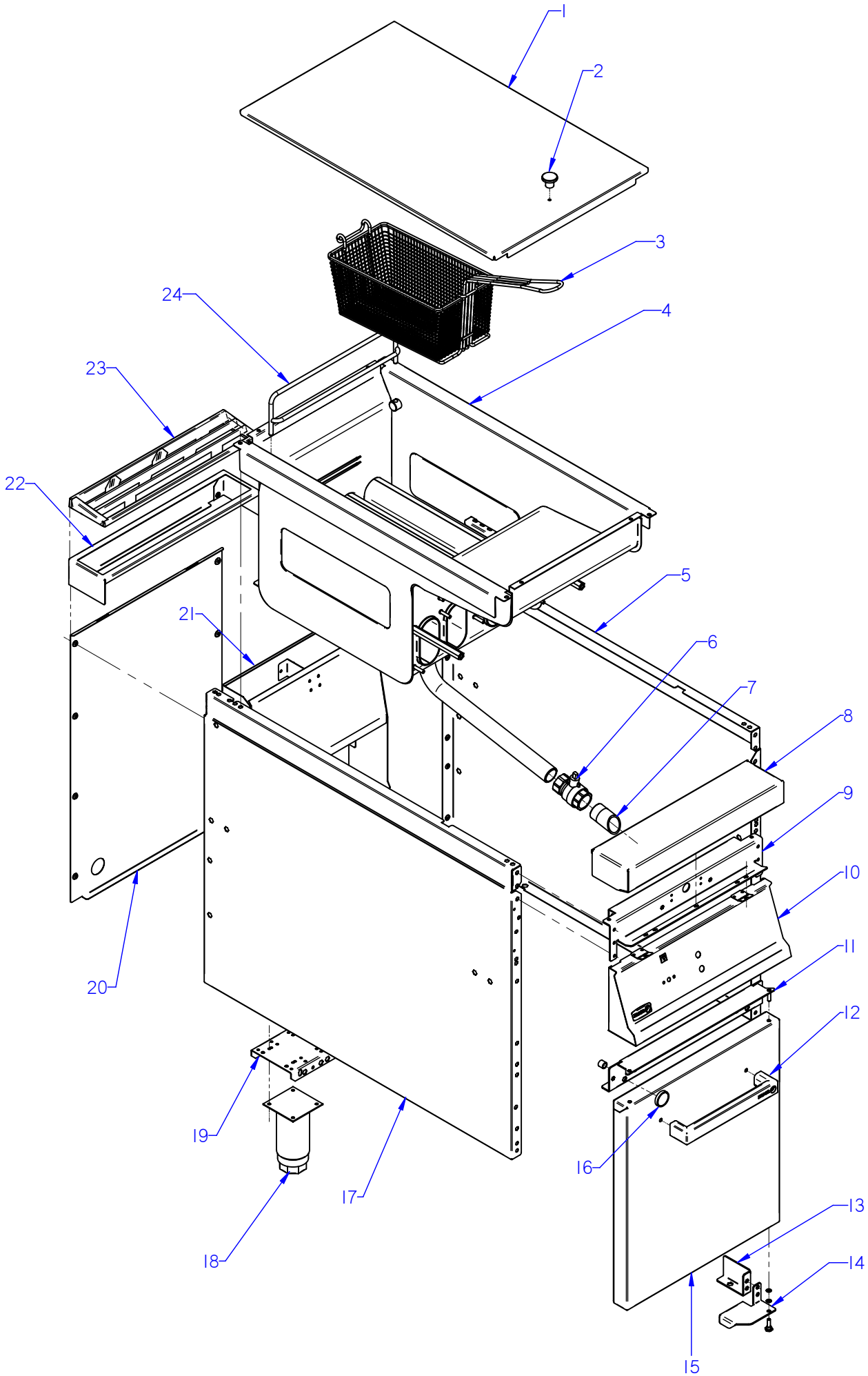

ITEM MARCADO EN COLOR = REPUESTO RECOMENDADO
COLOURED ITEM = RECOMMENDED SPARE PART

Nº plano / N º plane	Firma	Fecha / Date	Denominación / Denomination: MUEBLE / FITTING	Lamina / Sheet	
C-2915	Irene Berrpe	2011-11	FREIDORAS FG9-05 AD / 10 AD	1	Fagor Industrial S.Coop. FAGOR Oñate

MOD.	FREIDORAS / FRYERS	ZONA / ZONE	MUEBLE / FITTING	PLANO DIAGRAM	C-2915

ITEM	CODIGO REFERENCE	DENOMINACION	DENOMINATION	FG9-05 AD	FG9-05 S AD	FG9-10 AD						ELIMINADO ELIMINATED	INTRODUCID. INTRODUCED	NOTAS
1	X166144000	TAPA DE CUBA	COVER FG9-00	1	1	2								
2	X166154000	POMO PARA TAPA	COVER KNOB	1	1	2								
	Q152004000	TORNIL. APLASTADO M5X13 A 304	FLAT HEADED SCREW M5x13 A 3	2	2	2								
	Q302022000	ARANDELA 16X6X1.2 A.304	WASHER 16X6X1.2 A.304	1	1	2								
3	X166525000	CESTILLO PEQUEÑO G900	SMALL BASKET G900	2	2	4								
S/Nº	X166522000	REJILLA COMPLETA	COMPLETE GRILLE	1	1	2								
4	X166156000	CUBA COMPLETA	COMPLETE TUB FG9-05	1	1	2								
	Q012043000	TORNILLO EXAGONAL M6X20	HEXAGONAL BOLT M6X20	1	1	2								
	Q302022000	ARANDELA 16X6X1.2 A.304	WASHER 16X6X1.2 A.304	1	1	2								
	Q012032000	TORNILLO EXAGONAL M5X15	HEXAGONAL BOLT M5X15	6	6	12								
5	X162814000	PANEL LATERAL DERECHO G900	RIGHT SIDE PANEL G900	1	_	2								
5	S142806000	PANEL LATERAL DERECHO G900S	RIGHT SIDE PANEL G900S	_	1	_								
	Q221343000	REMACHE EXAGONAL M6	HEXAGONAL RIVET M6	4	4	8								
	Q221342000	REMACHE EXAGONAL M5	HEXAGONAL RIVET M5	6	6	12								
6	X036107000	VALVULA ESFERA PASO TOTAL 1	SPHERICAL VALVE TOTAL PASS	1	1	2								
7	X506129000	PUNTA DESAGÜE (CUBA LIMPIA)	DRAINAGE POINT (CLEAN TUB)	1	1	2								
8	U965415000	ANTERIOR MESA 0,5 M AD	BENCH FRONT 0.5 M AD	1	1	_								
8	S105403000	ANTERIOR MESA 1 M AD	BENCH FRONT 1 M AD	_	_	1								
	Q152004000	TORNIL. APLASTADO M5X13 A 304	FLAT HEADED SCREW M5x13 A 3	2	2	2								
	Q302022000	ARANDELA 16X6X1.2 A.304	WASHER 16X6X1.2 A.304	1	1	1								
9	R042611000	ESCUA INTER AMAR ANTE 0,5 M	BRACKET INTER FASTE. FRONT	1	1	_								
9	U042610000	ESCUA INTER AMAR ANTE 1 M	BRACKET INTER FASTE. FRONT	_	_	1								
	Q221342000	REMACHE EXAGONAL M5	HEXAGONAL RIVET M5	3	3	6								
	Q012032000	TORNILLO EXAGONAL M5X15	HEXAGONAL BOLT M5X15	6	6	12								
	Q302022000	ARANDELA 16X6X1.2 A.304	WASHER 16X6X1.2 A.304	1	1	2								
	Q162040000	TUERCA EXAGONAL M6	HEXAGONAL NUT M6	2	2	4								
10	X502811000	PORTAMANDOS COMP. FG-905	CONTROL HOLDER FG-905	1	1	_								
10	X702811000	PORTAMANDOS COMP. FG-910	CONTROL HOLDER FG-910	_	_	1								
	Q152004000	TORNIL. APLASTADO M5X13 A 304	FLAT HEADED SCREW M5x13 A 3	2	2	2								
	U022836000	ESCUDO FAGOR	FAGOR EMBLEM	1	1	1								
	Q221023000	CLIP SUJECIÓN RÁPIDA Ø5	RAPID CONNECT CLIP Ø5	2	2	2								

MOD.	FREIDORAS / FRYERS	ZONA / ZONE	MUEBLE / FITTING	PLANO DIAGRAM	C-2915

ITEM	CODIGO REFERENCE	DENOMINACION	DENOMINATION	FG9-05 AD	FG9-05 S AD	FG9-10 AD						ELIMINADO ELIMINATED	INTRODUCID. INTRODUCED	NOTAS
11	X162669000	LISTON BISAGRA SUPERIOR DCH.	UPPER RIGHT HINGE STRIP	1	1	1								
S/Nº	X172602000	LISTON BISAGRA SUPERIOR IZDO.	UPPER LEFT HINGE STRIP	_	_	1								
	Q221342000	REMACHE EXAGONAL M5	HEXAGONAL RIVET M5	6	6	12								
	Q152004000	TORNIL. APLASTADO M5X13 A 304	FLAT HEADED SCREW M5x13 A 3	2	2	4								
12	Z710558000	ASA CAPOTA AD	AD HOOD HANDLE	1	1	2								
	Q162040000	TUERCA EXAGONAL M6	HEXAGONAL NUT M6	2	2	4								
	Q302022000	ARANDELA 16X6X1.2 A.304	WASHER 16X6X1.2 A.304	2	2	4								
13	U020526000	ESCUADRA REFUERZO BISAG DE.	R. HINGE REINFORCE. BRACKET	1	_	1								
13	U020527000	ESCUADRA REFUERZO BISAG IZQ.	L. HINGE REINFORCE. BRACKET	_	_	1								
	Q221343000	REMACHE EXAGONAL M6	HEXAGONAL RIVET M6	1	_	1								
	Q221342000	REMACHE EXAGONAL M5	HEXAGONAL RIVET M5	2	_	2								
	Q152004000	TORNIL. APLASTADO M5X13 A 304	FLAT HEADED SCREW M5x13 A 3	2	_	2								
14	U020511000	BISAGRA DERECHA INFERIOR	LOWER RIGHT HINGE	1	_	1								
14	X190504000	BISAGRA DERECHA INFERIOR SUS	LOWER RIGHT HINGE S	_	1	_								
14	U020517000	BISAGRA IZQUIERDA INFERIOR	LEFT LOWER HINGE	_	_	1								
	X960504000	TORNILLO DE GIRO M8	ROTATION BOLT M8	1	1	2								
	Q232040000	ARANDELA A6	WASHER A6	2	2	4								
	Q232050000	ARANDELA A8	WASHER A8	2	2	4								
	Q221342000	REMACHE EXAGONAL M5	HEXAGONAL RIVET M5	2	_	4								
	Q012042000	TORNILLO EXAGONAL M6X15	HEXAGONAL BOLT M6X15	2	_	4								
	Q302022000	ARANDELA 16X6X1.2 A.304	WASHER 16X6X1.2 A.304	2	_	4								
15	U960501000	PUERTA LATERAL AD	SIDE DOOR AD	1	_	2								
15	U492803000	PUERTA LATERAL SUS AD	SIDE DOOR AD	_	1	_								
S/Nº	U020537000	CONTRAPUERTA LATERAL G900	SIDE DOOR REVERSE G900	1	_	2								
S/Nº	U020514000	CONTRAPUERTA LATE. SUS AD	SIDE DOOR REVERSE US AD	_	1	_								
	Q412000000	REMACHE TUBULAR 4X8	RIVET 4X8	4	4	8								
16	X960501000	IMAN	MAGNET	2	2	4								
S/Nº	X960502000	FIJACION IMAN	MAGNET ATTACHMENT	2	2	4								
	Q012021000	TORNILLO EXAGONAL M4X10	HEXAGONAL BOLT M4x10	2	2	4								
	Q232020000	ARANDELA A4	WASHER A4	2	2	4								

MOD.	FREIDORAS / FRYERS	ZONA / ZONE	MUEBLE / FITTING	PLANO DIAGRAM	C-2915

ITEM	CODIGO REFERENCE	DENOMINACION	DENOMINATION	FG9-05 AD	FG9-05 S AD	FG9-10 AD						ELIMINADO ELIMINATED	INTRODUCID. INTRODUCED	NOTAS
17	X162813000	PANEL LATERAL IZQUIERDO G900	LEFT SIDE PANEL G900	1	_	2								
17	S142805000	PANEL LATERAL IZQUIERD. G900S	LEFT SIDE PANEL G900S	_	1	_								
	Q221342000	REMACHE EXAGONAL M5	HEXAGONAL RIVET M5	6	6	12								
	Q221343000	REMACHE EXAGONAL M6	HEXAGONAL RIVET M6	4	4	8								
18	X260151000	PATA REGULABLE	ADJUSTABLE LEG	4	_	4								
	Q411304000	REMACHE AVIBULB Ø 4,8	AVIBULB RIVET Ø 4.8	16	_	16								
19	E052603000	LISTON SOPORTE PATAS 1/2 M AD	LEG SUPPORT STRIP 1/2 M AD	2	_	_								
19	X492611000	LISTON SOPORTE PATAS 1 M	LEG SUPPORT STRIP 1 M	_	_	2								
	Q012042000	TORNILLO EXAGONAL M6X15	HEXAGONAL BOLT M6X15	8	8	8								
	Q302022000	ARANDELA 16X6X1.2 A.304	WASHER 16X6X1.2 A.304	1	1	1								
S/Nº	X192808000	BASE INFERIOR COMPLETA	COMPLETE LOWER BASE	_	1	_								
S/Nº	X492612000	REFUERZO BASE INFERIOR SUSP.	SUSP. LOWER BASE REINFORCE	_	1	_								
	Q012041000	TORNILLO EXAGONAL M6X10	HEXAGONAL BOLT M6X10	_	2	_								
	Q302022000	ARANDELA 16X6X1.2 A.304	WASHER 16X6X1.2 A.304	_	1	_								
	Q221342000	REMACHE EXAGONAL M5	HEXAGONAL RIVET M5	_	2	_								
20	X492801000	PANEL POSTERIOR 0,5 M AD	REAR PANEL 0.5 M AD	1	_	_								
20	X492804000	PANEL POSTERIOR 0,5 M SUS AD	REAR PANEL 0.5 M SUS AD	_	1	_								
20	X492802000	PANEL POSTERIOR 1M AD	FRYER REAR PANEL1M AD		_	1								
	Q419005000	REMACHE 4X8 ALMG3 / ALUMINIO	RIVET 4X8 ALMG3 / ALUMINIUM	8	6	12								
21	X492601000	ANTERIOR CHIMENEA AD	FLUEPIPE FRONT AD	1	1	2								
S/Nº	X492609000	POSTERIOR CHIMENEA FG AD	FG REAR FLUE AD	1	1	2								
S/Nº	X492610000	DISTANCIADOR CHIMENEA AD	FLUEPIPE SPACER AD	1	1	2								
	Q221343000	REMACHE EXAGONAL M6	HEXAGONAL RIVET M6	2	2	4								
	Q012041000	TORNILLO EXAGONAL M6X10	HEXAGONAL BOLT M6X10	2	2	4								
	Q302022000	ARANDELA 16X6X1.2 A.304	WASHER 16X6X1.2 A.304	1	1	2								
	Q419005000	REMACHE 4X8 ALMG3 / ALUMINIO	RIVET 4X8 ALMG3 / ALUMINIUM	20	20	20								
22	R205438000	SOPORTE EMBELLECEDOR 1/2M	1/2M TRIM SUPPORT	1	1	2								
23	R205425000	EMBELLECEDOR ESMALTE	1/2M TRIM	1	1	2								
24	X166527000	SOPORTE COMPLETO CESTILLO	COMPLETE BASKET SUPPORT	1	1	1								

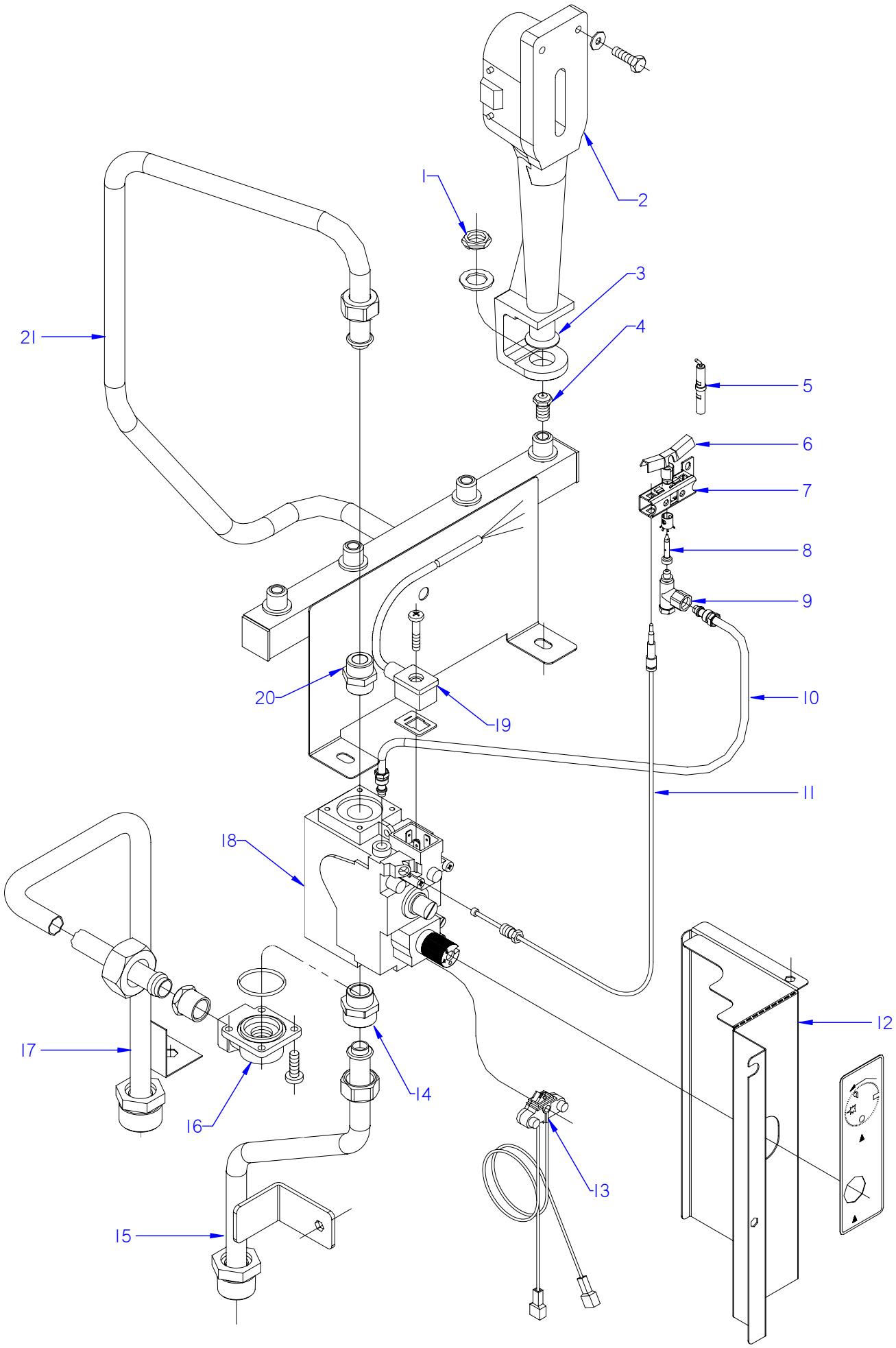

ITEM MARCADO EN COLOR = REPUESTO RECOMENDADO
COLOURED ITEM = RECOMMENDED SPARE PART

Nº plano / N º plane	Firma	Fecha / Date	Denominación / Denomination: PARTE FUNCIONAL GAS / FUNTIONAL PART GAS	Lamina / Sheet	
C-2916	Irene Berrpe	2011-11	FREIDORAS FG9-05 AD / 10 AD	2	Fagor Industrial S.Coop. FAGOR Oñate

MOD.	FREIDORAS / FRYERS	ZONA / ZONE	PARTE FUNCIONAL GAS / FUNCTIONAL PART GAS	PLANO DIAGRAM	C-2916

ITEM	CODIGO REFERENCE	DENOMINACION	DENOMINATION	FG9-05 AD	FG9-05 S AD	FG9-10 AD						ELIMINADO ELIMINATED	INTRODUCID. INTRODUCED	NOTAS
1	Q223021000	TUERCA EXAGONAL 15x1	HEXAGONAL NUT 15x1	4	4	8								
	Q301322000	ARANDELA PLANA 27x17x2	FLAT WASHER 27x17x2	4	4	8								
2	X015700000	QUEMADOR COMPLETO FG9-00	COMPLETE BURNER FG9-00	4	4	8								
	Q012043000	TORNILLO EXAGONAL M6x20 A304	HEXAGONAL BOLT M6x20 A304	8	8	16								
	Q302022000	ARANDELA 16x6x1,2 A.304	WASHER 16X6X1.2 A.304	8	8	16								
3	U325707000	REGULADOR DE AIRE	AIR REGULATOR	4	4	8								
	Q012031000	TORNILLO EXAGONAL M5X10 A304	HEXAGONAL BOLT M5x10 A304	4	4	8								
4	X162403000	TOBERA Ø 1,25 (BUTANO-PROP.)	NOZZLE Ø1.25 (BUT-PROP.)	4	4	8								
4	9429400000	TOBERA Ø 1,80 (GAS NATURAL)	NOZZLE Ø1.80 (GAS NATURAL)	4	4	8								
5	X012101000	BUJIA 915.037	SPARK PLUG 915.037	1	1	2								
6	X012117000	PILOTO	PILOT	1	1	2								
7	X012113000	AMARRE TRAS. PILOTO 978.003	REAR FASTENING PILOT 978.003	1	1	2								
S/Nº	X012114000	AMARRE DELANT. PILOTO 978.004	FRONT FASTENING PILOT 978.00	1	1	2								
S/Nº	X012122000	REGULADOR DE AIRE 912.001	AIR CONTROL 912.001	1	1	2								
8	U442137000	INYECTOR Ø 0.4 (GAS NATURAL)	NOZZLE Ø0.4 (GAS NATURAL)	1	1	2								
9	X012126000	CUERPO SIN RAC. 901.210	BODY WITHOUT CONNEC. 901.21	1	1	2								
	X012116000	TORNILLO AMARRE PILOTO	PILOT FASTENING BOLT	2	2	4								
10	X165068000	TUBO PILOTO COMPLE G900	COMPL PILOT PIPE FG-900	1	1	2								
11	U562130000	TERMOPAR L=850	THERMOCOUPLE L=850	1	1	2								
12	X492608000	PROT. ELECTROVALVULA AD	SOLENOID VALVE PROT. AD	1	1	2								
S/Nº	X162617000	PEGATINA POSICION MANDO	CONTROL POSITION STICKER	1	1	2								
	Q221342000	REMACHE EXAGONAL M5	HEXAGONAL RIVET M5	1	1	2								
	Q152004000	TORNIL. APLASTADO M5X13 A 304	FLAT HEADED SCREW M5x13 A 3	2	2	4								
13	R275027000	CABLEADO ELECTROSIT 927.012	WIRING ELECTROSIT 927.012	1	1	2								
14	S502106000	MANGUITO DOBLE 3/4"- 1/2"	DOUBLE SLEEVE 3/4"- 1/2"	1	1	2								
	Q306052000	ARANDELA Ø23,5x15,5x3	WASHER Ø23.5X15.5X3	1	1	2								
15	X165065000	TUBO ENTRADA GENERAL	COMPL GAS INPUT FG-900	1	_	2								
	Q152004000	TORNIL. APLASTADO M5X13 A 304	FLAT HEADED SCREW M5x13 A 3	2	_	4								
	Q221342000	REMACHE EXAGONAL M5	HEXAGONAL RIVET M5	5	_	10								
	Q306013000	ARANDELA PLANA Ø30.4X22.4X3	FLAT WASHER Ø30.4X22.4X3	1	_	2								
16	X153004000	CODO 1-2 820NOV 906.260	L-BEND	_	1	_								

MOD.	FREIDORAS / FRYERS	ZONA / ZONE	PARTE FUNCIONAL GAS / FUNCTIONAL PART GAS	PLANO DIAGRAM	C-2916

ITEM	CODIGO REFERENCE	DENOMINACION	DENOMINATION	FG9-05 AD	FG9-05 S AD	FG9-10 AD						ELIMINADO ELIMINATED	INTRODUCID. INTRODUCED	NOTAS
17	X195057000	ENTRADA GENERAL COMPLETA	COMPL GAS INPUT FG-900S	_	1	_								
	Q306013000	ARANDELA PLANA Ø30,4x22,4x3	FLAT WASHER Ø30.4X22.4X3	_	1	_								
	Q162040000	TUERCA EXAGONAL M6	HEXAGONAL NUT M6	_	2	_								
	Q302022000	ARANDELA 16x6x1,2 A.304	WASHER 16X6X1.2 A.304	_	1	_								
	Q221342000	REMACHE EXAGONAL M5	HEXAGONAL RIVET M5	_	1	_								
18	X163000000	ELECTROVALVULA NOVA 820.018	SOLENOID VALVE NOVA 820.018	1	1	2								
19	X163009000	JUNTA CONECTOR NOVA 960.104	CONNECTOR GASKET NOVA 960	1	1	2								
	X163008000	CABLE CONECTOR 820 960.103	CONNECTOR CABLE 820 960.103	1	1	2								
20	S205023000	MANGUITO DOBLE 1/2	DOUBLE SLEEVE 1/2	1	1	2								
	Q306013000	ARANDELA PLANA Ø30.4X22.4X3	FLAT WASHER Ø30.4X22.4X3	1	1	2								
	Q306057000	ARANDELA Ø18x12,5x1,5	WASHER Ø18x12.5x1.5	1	1	2								
21	X165060000	DISTRIBUIDOR COMPLETO FG900	COMPL. DISTRIBUTOR FG-900	1	_	2								
21	X195053000	DISTRIBUIDOR COMPLET, FG900S	COMPL. DISTRIBUTOR FG-900S	_	1	_								

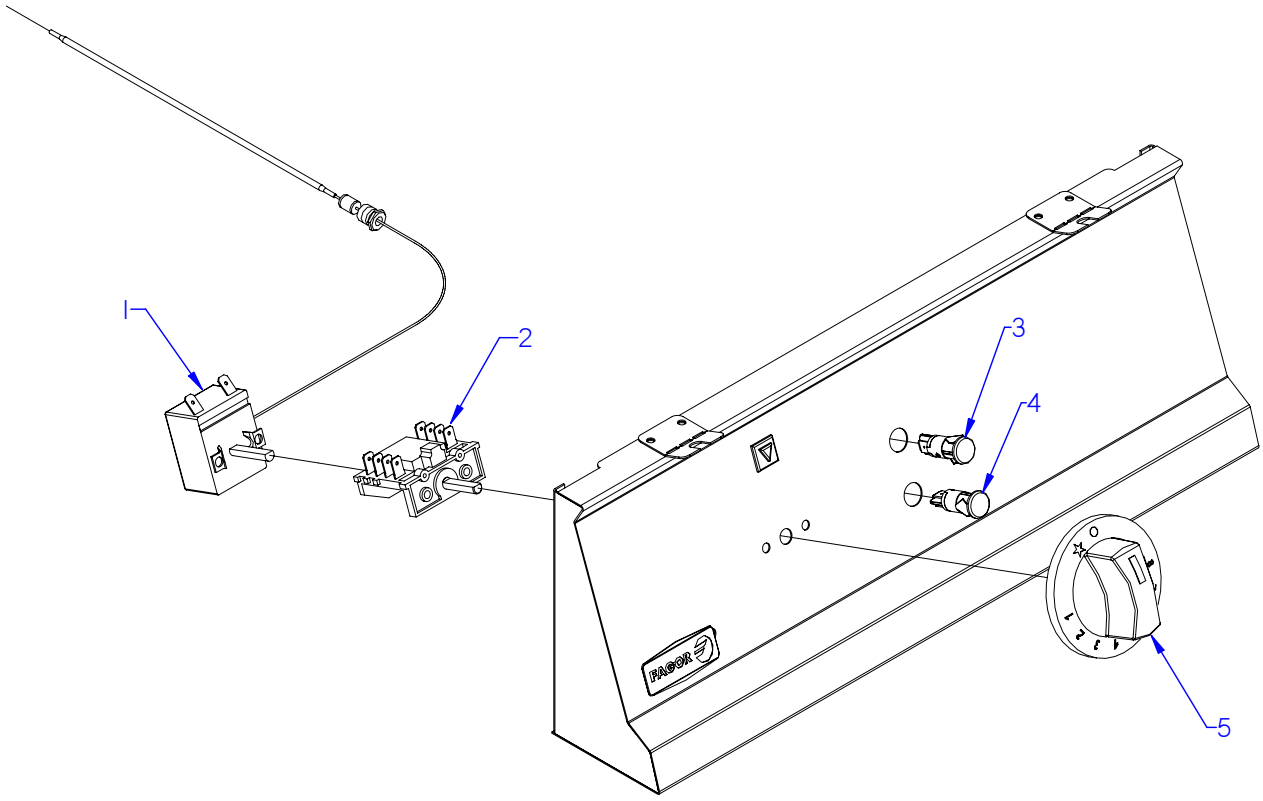

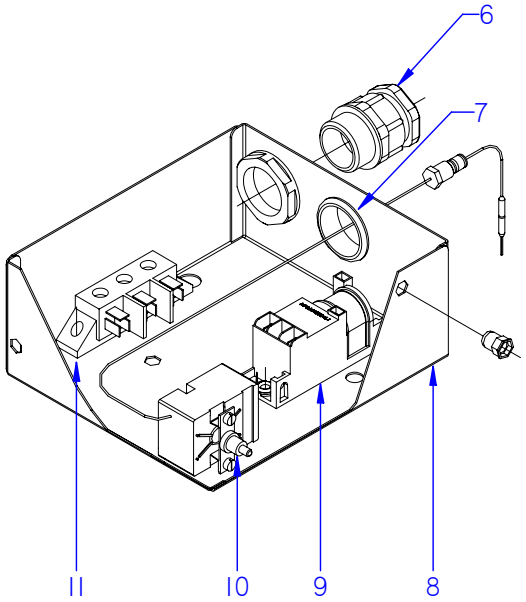

ITEM MARCADO EN COLOR = REPUESTO RECOMENDADO
COLOURED ITEM = RECOMMENDED SPARE PART

Nº plano / N º plane	Firma	Fecha / Date	Denominación / Denomination: FUNCIONAL ELECTRICA / FUNCTIONAL ELECTRICAL	Lamina / Sheet	
C-2917	Irene Berrpe	2011-11	FREIDORAS FG9-05 AD / 10 AD	3	Fagor Industrial S.Coop. FAGOR Oñate

MOD.	FREIDORAS / FRYERS	ZONA / ZONE	PARTE FUNCIONAL ELECTRICO FUNCTIONAL ELECTRICAL PART	PLANO DIAGRAM	C-2917

ITEM	CODIGO REFERENCE	DENOMINACION	DENOMINATION	FG9-05 AD	FG9-05 S AD	FG9-10 AD						ELIMINADO ELIMINATED	INTRODUCID. INTRODUCED	NOTAS
1	X163010000	TERMOSTATO	THERMOSTAT	1	1	2								
2	X163007000	CONMUTADOR ACOPLE TERMOS.	THERMOSTAT CONNECT SWITCH	1	1	2								
3	R693055000	PILOTO VERDE 41227000C7	GREEN PILOT 41227000C7	1	1	2								
4	R693056000	PILOTO AMBAR 41227000A4	AMBER PILOT 41227000A4	1	1	2								
5	X503005000	MANDO MONTADO FG9 Ø6	CONTROL BUTTON Ø6 FG-900	1	1	2								
6	R023013000	PRENSA ESTOPAS	STUFFING BOX	1	1	2								
	R023025000	CONTRATUERCA GAES	COUNTERNUT GAES	1	1	2								
	R023026000	JUNTA DE GOMA GAES	RUBBER SEAL GAES	1	1	2								
7	X723014000	PASAMUROS Ø 30	WALL BUSHING Ø 30	1	1	2								
8	X493001000	CUADRO ELECTRICO FG9-00 AD	ELECTRIC PANEL FG9-00 AD	1	_	2								
8	X493003000	CUADRO ELECTRICO FG-905 S AD	ELECTRIC PANEL FG9-00 S AD	_	1	_								
S/Nº	X493002000	TAPA CUADRO ELECTRICO AD	ELECTRIC PANEL COVER AD	1	_	2								
S/Nº	X493004000	TAPA CUADRO ELECTR.. AD SUSP	ELECTR. PANEL COVER AD SUS	_	1	_								
	Q152004000	TORNILLO APLASTADO M5x13 A30	FLAT HEADED BOLT M5x13 A304	9	9	12								
	Q221342000	REMACHE EXAGONAL M5	HEXAGONAL RIVET M5	3	3	12								
9	X163014000	ENCENDEDOR PARA 2 BUJIAS	LIGHTER FOR 2 PLUGS	1	1	2								
	Q082005000	TORNILLO CHAP. 4,2X13 4.2X13	PLATE BOLT 4.2X13 4.2X13	2	2	4								
10	X163001000	TERMOSTATO LIMITADOR	THERMOSTAT LIMITER	1	1	2								
	Q151320000	TORNILLO ALOM. M4X6 H.ZINCAD.	CURVED SCREW M4x6 H,ZINC.	2	2	4								
11	U183046000	REGLETA AUXILIAR	AUXILIARY STRIP	1	1	2								
	Q152004000	TORNILLO APLASTADO M5x13 A30	FLAT HEADED BOLT M5x13 A304	2	2	4								

MOD.	FREIDORAS / FRYERS	ZONA / ZONE	VARIOS / MISCELLANEOUS	PLANO DIAGRAM	

ITEM	CODIGO REFERENCE	DENOMINACION	DENOMINATION	FG9-05 AD	FG9-10 AD							ELIMINADO ELIMINATED	INTRODUCID. INTRODUCED	NOTAS
	X166529000	FOLLETO DE INSTRUCC. FG9-00	INSTRUCTION LEAFLET. FG900	1	1									
	X163005000	ESQUEMA TEORICO ADHESIVO	THEOR. DIAGRAM LABEL	1	1									PLANO HB-14457
	X163018000	CABLEADO PORTAMANDOS	CONTROL HOLDER WIRING	1	2									
	U323007000	CABLE ENCENDEDOR A BUJIA	LIGHTER TO SPARK PLUG CAB.	1	2									
	X163002000	CABLE BUJIA	SPARK PLUG CABLE	1	2									

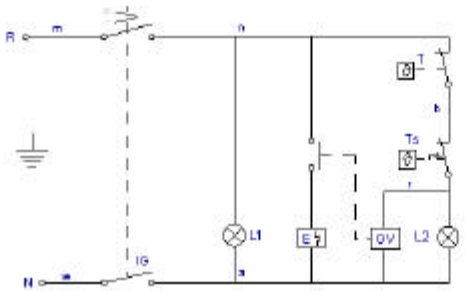

IG = Interruptor general
L1 = Lampara funcionamiento
T = Termostato regulable (60-220C)
Ts = Limitador (245)
L2 = Lampara calentamiento
E = Encendedor
GV = Grifo valvula gas

m=marron-brown-marron
n=negro-black-noir
r=rojo-red-rouge
b=blanco-white-blanc
ve=verde-green-vert
g=gris-grey-gris
a=azul-blue-bleu

X 163005

NOTAS:
- GRABACIONES: COLOR NEGRO
- FONDO: COLOR NATURAL
- LA PLACA SERA AUTOADHESIVA POR LA CARA POSTERIOR Y RECUBIERTO POR UN PAPEL PROTECTOR.
- LAS INSCRIPCIONES RESISTIRAN SIN MODIFICACION APRECIABLE, EL FROTAMIENTO DURANTE 15 SEG. DE UN ALGODON EMPAPADO EN GASOLINA.

ALUMINIO BRILLO (SOLID-FOIL)
e=ALUMINIO+PROTECTOR=0,2 +0,05 -0,05

	Esquema teorico adhesivo FG-91/20		X163005		
Nº	Pieza	Material	Nº Clasificacion	Acabado	
Nº	Modificacion	Propuesta de	Fecha	Tolerancias generales	
1	Modificacion general(pasar a fabri.interi.)	Plazaola	23-5-97	<5±	50–100±
				5–25±	>100±
				25–50±	<x±

	Firma	Fecha		
Dibujado	JON	93-9-14	FAGOR	Mecanizado superficial
Proyectado				
Comprobado			Fagor Industrial, Koop.Elk, Mugatua	
Escala	FREIDORAS			Plano numero HB-14457-1
				Sustituye al Nº
	Plano Inmaculado no sobrecargado por barrendegado			Sustituido por