SIMAG

Electronic modular cuber

SV 530

R 22 AND R 404 A VERSION

SPARE PARTS LIST
CATALOGO RICAMBI
CATALOGUE PIÈCES DÉTACHÉES
ERSATZTEILENKATALOG

090090. REV. 11/98

PAGE PAGINA PAGE SEITE	TABLE OF CONTENTS	INDICE	TABLE DES MATIÈRES	INHALTVERZEICHNIS
1	TABLE OF CONTENTS	INDICE	TABLE DES MATIÈRES	INHALTVERZEICHNIS
2/3	CABINET ASSEMBLY	ASSIEME MOBILE	ENSEMBLE CAROSSERIE	AUSSENWAENDE
4/5	ICE MAKING SYSTEM AND CONTROL BOX	GRUPPO EVAPORATORE E SCATOLA ELETTRICA	GROUP EVAPORATEUR ET BOITIER DE COMMANDE	VERDAMPFER UND ANSCHLUSSKASTEN
6/7	CONDENSING UNIT AIR COOLED	UNITA' CONDENSATRICE RAFFR. AD ARIA	UNITÉ DE CONDENSATION REFROID. PAR AIR	LUFTGEKUEHLTES KÄLTEAGGREAT
8/9	CONDENSING UNIT WATER COOLED	UNITA' CONDENSATRICE RAFFR. AD ACQUA	UNITÉ DE CONDENSATION REFROID. PAR EAU	WASSERGEKUEHLTES KÄLTEAGGREGAT

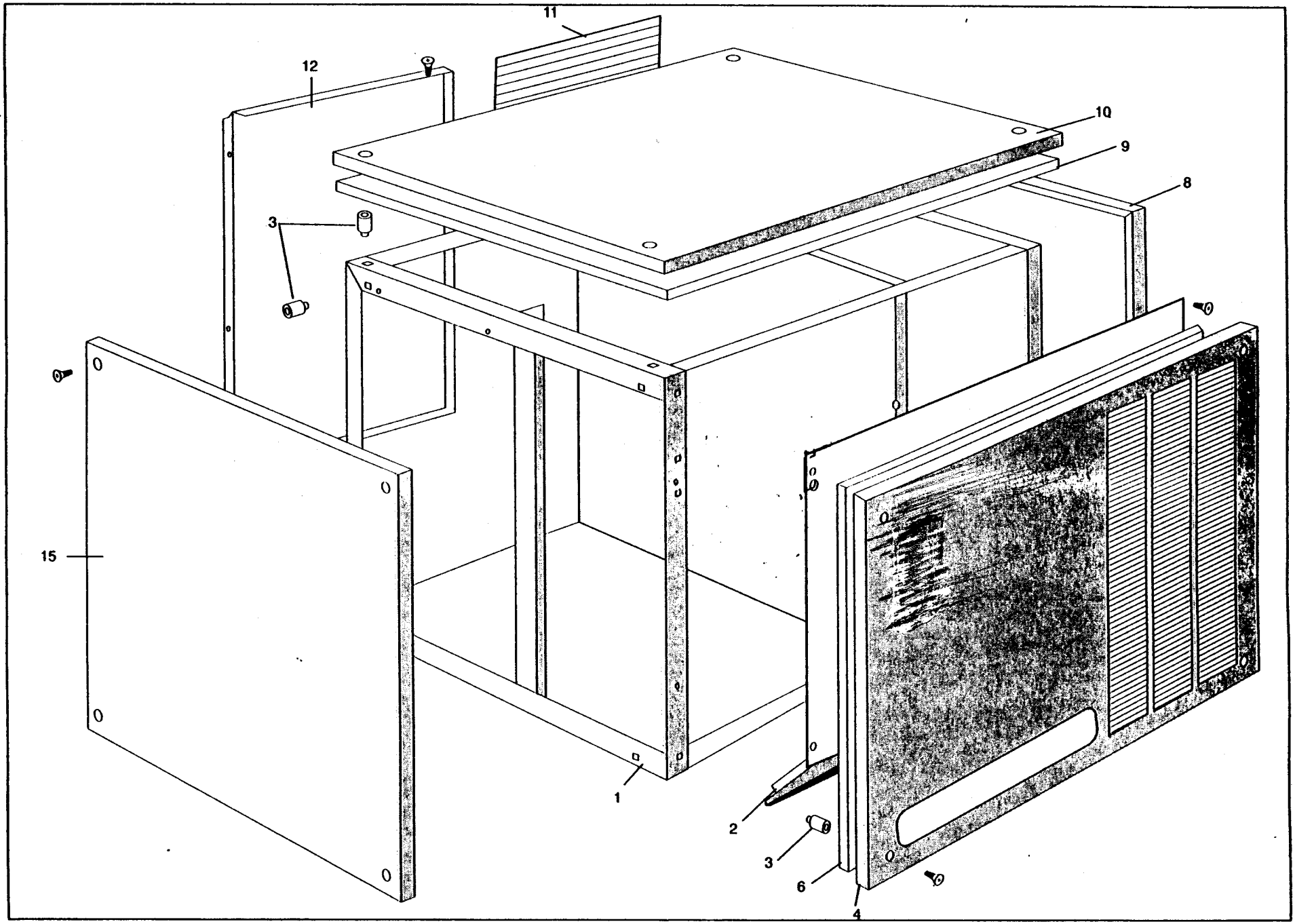
11
12
10
9
8
3
15
1
2
3
6
4

SV 530 - CABINET ASSEMBLY - ASSIEME MOBILE - ENSEMBLE CAROSSERIE - AUSSENWAENDE

ITEM NO POS NO REP. NO REF. NO	PART NO CODICE REFERENCE STUECK NR.	DESCRIPTION	DESCRIZIONE	DESIGNATION	BESCHREIBUNG
1	CM 81453230	UNIT CHASSIS	ASS. TELAIO	ENS. CHASSIS	GEHAEUSETEILE
2	CM 81453263 CM 81453264	ICE DEFLECTOR - FRONT ICE DEFLECTOR - REAR	DEFLETTORE CUBETTI - FRONT. DEFLETTORE CUBETTI - POST.	DEVERSOIR GLACONS - FRONT. DEVERSOIR GLACONS - ARRIERE	WORDEREISWÜRFGLEITBAHN REUCKEISWÜRFGLEITBAHN
3	CM 19356001	PLASTIC CLIP	MADREVITE	CLIP EN PLASTIQUE	PLASTICHE MUTTER
4	CM 25547061	FRONT PANEL S.S.	PANNELLO FRONTALE ACC. INOX	PANNEAU AVANT ACIER INOX	EDELSTHALVORDERWAND
6	CM 25547074	INSULATION	ISOLAMENTO	ISOLATION	ISOLIERUNG
8	CM 25330701	RIGHT SIDE PANEL S.S.	PANNELLO LAT. DX ACC. INOX	PANNEAU DROITE ACIER INOX	EDELSTHAL RECHTSWAND
9	CM 25247069	INSULATION	ISOLAMENTO	ISOLATION	ISOLIERUNG
10	CM 25161065	TOP PANEL S.S.	PANNELLO SUPERIORE ACC. INOX	PANNEAU DESSUS ACIER INOX	EDELSTHAL ABDECKHAUBE
11	CM 25380708	GRID	GRIGLIA	GRILLE	SCHUTZKORB
12	CM 25547063	REAR PANEL	PANNELLO POSTERIORE	PANNEAU ARRIERE	REUCKWAND
15	CM 25330704	LEFT SIDE PANEL S.S.	PANNELLO LAT. SX ACC. INOX	PANNEAU GAUCHE ACIER INOX	EDELSTHAL LINKSWAND

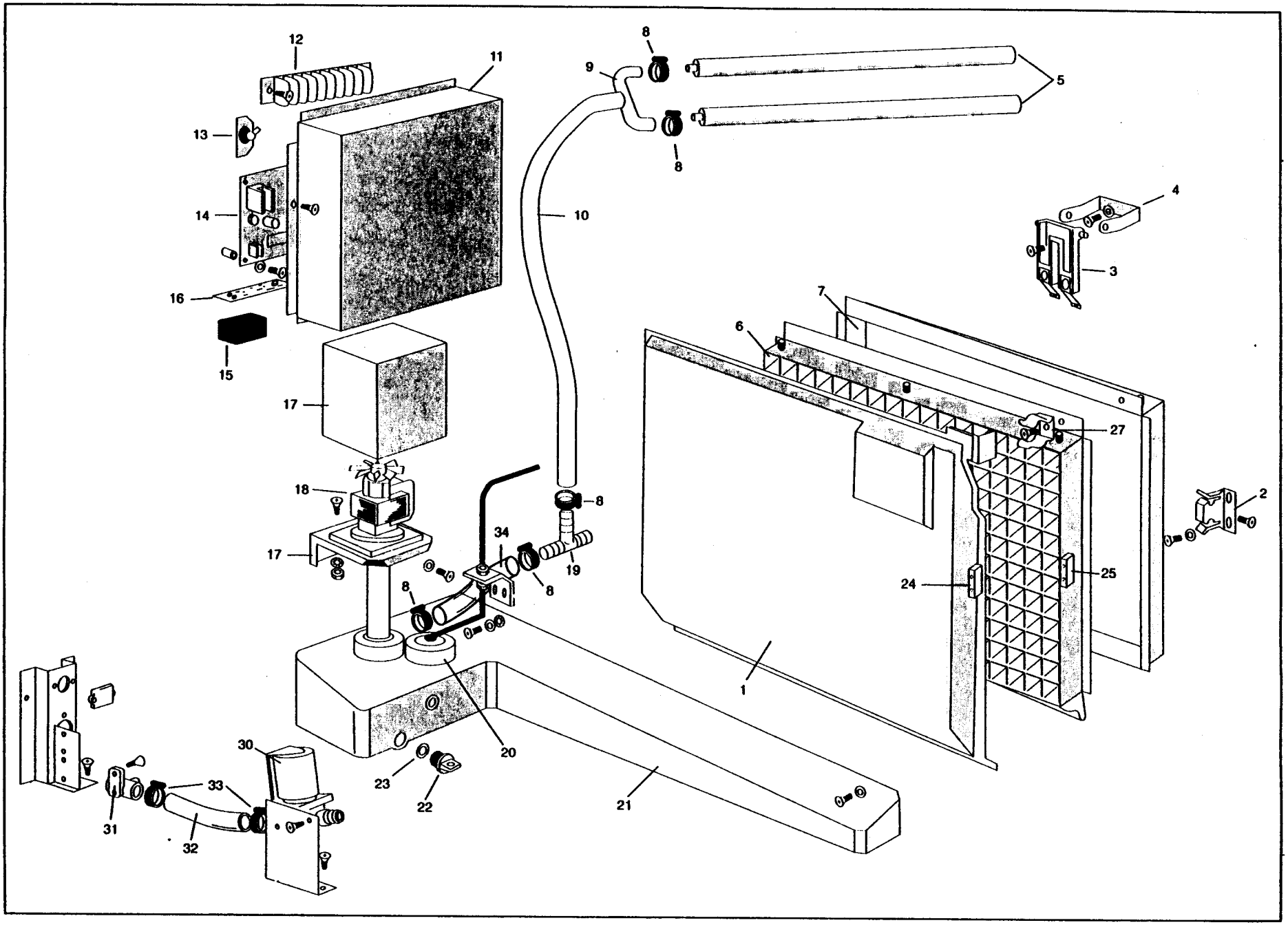
12
11
13
14
16
15
17
18
17
8
9
8
5
10
4
3
7
6
27
2
8
34
19
8
8
24
25
1
20
30
33
23
22
21
31
32

SV 530 - ICE MAKING SYSTEM AND CONTROL BOX - GRUPPO EVAPORATORE E SCATOLA ELETTRICA
GROUP EVAPORATEUR ET BOITIER DE COMMANDE - VERDAMPFER UND ANSCHLUSSKASTEN

ITEM NO POS NO REP. NO REF. NO	PART NO CODICE REFERENCE STUECK NR.	DESCRIPTION	DESCRIZIONE	DESIGNATION	BESCHREIBUNG
1	CM 81453261 CM 81453262	DEFLECTOR COVER - FRONT DEFLECTOR COVER - REAR	DEFLETTORE/COPERCHIO - FRONT. DEFLETTORE/COPERCHIO - POST.	COUVERCLE/DEFLECTEUR - FRONT. COUVERCLE/DEFLECTEUR - ARRIERE	WORDERLENKWAND REUCKLENKWAND
2	CM 25726473	DEFLECTOR COVER/BRKT	SUPPORTO COPERCHIO/DEFLETTORE	SUPPORT COUVERCLE/DEFLECTEUR	LENKWAND KLAMMERN
3	CM 81453255	ICE THICKNESS SENSOR CONTROL DEVICE	ASS. SENSORE CONTROLLO SPESSORE GHIACCIO	ENS. DISPOSITIF CAPTEUR EIPASSEUR GLAÇONS	EISGROSSEMEßFÜHLER
4	CM 25725450	SENSOR DEVICE BRKT	SUPPORTO DISPOSITIVO SENSORI	SUPPORT DISPOSITIF CAPTEUR	EISMEßFÜHLER KLAMMERN
5	CM 81453257 CM 81453009	WATER DISTRIB. TUBE - FRONT WATER DISTRIB. TUBE - REAR	BARRA IRRORATRICE - FRONTALE BARRA IRRORATRICE - POSTER.	RAMPE D'ARROSAGE - FRONT. RAMPE D'ARROSAGE - ARRIERE	WORDERWASSERSPRUEHEINHEIT REUCKWASSERSPRUEHEINHEIT
6	CM 81453237 CM 81453239	EVAPORATOR ASSY - FRONT EVAPORATOR ASSY - REAR	ASSIEME EVAPORATORE - FRONT. ASSIEME EVAPORATORE - POSTER.	ENS. EVAPORATEUR - FRONT. ENS. EVAPORATEUR - ARRIERE	WORDERVERDAMPFEREINHEIT REUCKVERDAMPFEREINHEIT
8	CM 19280600	CLAMP	FASCETTA	COLLIER	KLEMME
9	CM 19612502	T FITTING	RACCORDO A T	RACCORD A T	T-STUECK
10	CM 25791222	WATER TUBE	TUBO	TUYAU	WASSERSCHLAUCH
11	CM 81453279	ELECTR. BOX COVER	COPERCHIO SC. ELETTRICA	COUVERCLE BOITIER ELECTR.	ANSCHLUSSKASTEN GEHAUSE
12	CM 33489251	TERMINAL BLOCK	MORSETTIERA	BORNIER	ANSCHLUSSKASTEN
13	CM 33400027	SWITCH	INTERRUTTORE	INTERRUPTEUR	SCHALTER
14	CM 33580043	ELECTRONIC CONTROL BOARD	SCHEDA ELETTRONICA	CARTE ELECTRONIQUE	STEUEURKARTE
15	CM 33580057	WATER PUMP DELAY DEVICE	DISP. RITARDO POMPA	DISP. RETARD POMPE EAU	VERSPÄTUNGSVORRICHTUNG-PUMPE
16	CM 33580056	INTERFACE PC BOARD	SCHEDA D'INTERFACCIA	CARTE D'INTERFACE	ELEKTR. ZUSATZPLATINE
17	CM 81453267	PUMP BRACKET	SUPPORTO POMPA	SUPPORT POMPE	PUMPENTRAEGER
18	793113 09 ~~24~~	WATER PUMP	POMPA	POMPE A EAU	WASSERPUMPE
19	CM 19612502	T FITTING	RACCORDO A T	RACCORD A T	T-STUECK
20	02 2217 02	FLOAT VALVE	GALLEGGIANTE	VANNE A FLOTTEUR	SCHWIMMERVENTIL
21	CM 81453247	WATER RESERVOIR	VASCHETTA ACQUA	RÉSERVOIR D'EAU	WASSERBECKEN
22	CM 25730503	DRAIN PLUG	TAPPO SCARICO	BOUCHON DE VIDANGE	VERSCHLUßSCRAUBE FÜR WASSER BECKEN
23	CM 41020448	O RING	GUARNIZIONE OR	JOINT TORIQUE	O RING
24	CM 19355004	MAGNET	MAGNETE	MAGNETO	MAGNET
25	CM 33210018	MAGNET CONTACT	CONTATTO MAGNETICO	MAGNETO CONTACT	MAGNETISCHES KONTAKT
27	CM 25474608	METAL CLIP	SUPPORTO	SUPPORT	UMKLAMMERN
30	CM 19865525	WATER DRAIN VALVE	VALVOLA SCARICO ACQUA	VANNE SOL. EVAC. EAU	WASSERABFLUSSVENTIL
31	CM 25690806	WATER DRAIN FITTING	RACCORDO SCARICO ACQUA	RACCORD EVAC. EAU	WASSERABFLUSSNIPPEL
32	CM 25791219	WATER TUBE	TUBO	TUYAU	WASSERSCHLAUCH
33	CM 25791220	CLAMP	FASCETTA	COLLIER	KLEMME

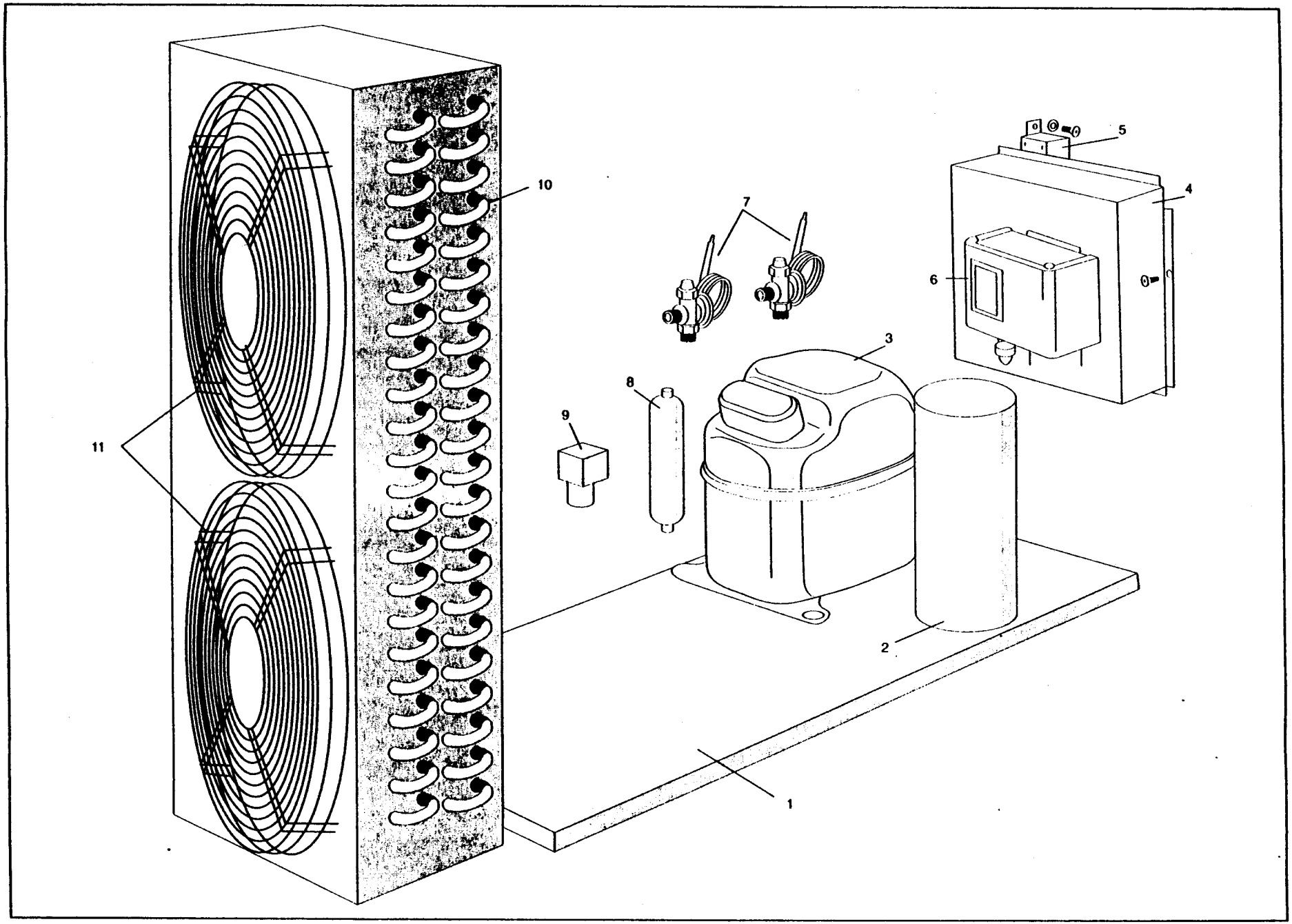
1
2
3
4
5
6
7
8
9
10
11

SV 530 - CONDENSING UNIT-AIR COOLED - UNITA' CONDENSATRICE-RAFFR. ARIA
UNITE DE CONDENSATION-REFROID. PAR AIR - LUFTGEKUEHLTES KÄLTEAGGREGAT

ITEM NO POS NO REP. NO REF. NO	PART NO CODICE REFERENCE STUECK NR.	DESCRIPTION	DESCRIZIONE	DESIGNATION	BESCHREIBUNG
1	CM 81453131	UNIT BASE	BASAMENTO	ENS. CHASSIS	GEHAEUSETEILE
2	CM 19635331	LIQUID RECEIVER	RICEVITORE DI LIQUIDO	BOUTEILLE LIQUIDE	FLÜSSIGKEITS SAMMLER
3	CM 19165526 CM 19165562	COMPRESSOR ASSY - R 22 COMPRESSOR ASSY - R 404 A	ASS. COMPRESSORE - R 22 ASS. COMPRESSORE - R 404 A	ENS. COMPRESSEUR - R 22 ENS. COMPRESSEUR - R 404 A	KOMPRESSOREINHET - R 22 KOMPRESSOREINHET - R 404 A
4	CM 81453278	CONTROL BOX COVER	COPERCHIO SC. ELETTRICA	COUVERCLE BOITE ELECTRIQUE	SCHALTSCHRANK DECKEL
5	CM 33701049	CONTACTOR	TELERUTTORE	CONTACTEUR	SCHALTSCHÜTZ-(FERNSCHALTER)
6	CM 19550610	PRESSURE SWITCH (FAN. CONT.)	PRESSOSTATO (COM. VENT.)	PRESSOSTAT H.P. (CONTR. VENT.)	PRESSOSTAT HOCKDRUCK (LUFTER MOTOR KONTR.)
7	CM 19870627 CM 19870842	THERM. EXP. VALVE - R 22 THERM. EXP. VALVE - R 404 A	VALVOLA ESPANS. TERMOSTATICA - R 22 VALVOLA ESPANS. TERMOSTATICA - R404 A	DETENDEUR - R 22 DETENDEUR - R 404 A	EXPANSION VENTIL - R 22 EXPANSION VENTIL - R 404 A
8	CM 19300355	DRIER	FILTRO	DESHIDRATEUR	TROCKNER
9	CM 19863034	HOT GAS VALVE ASSY	ASS. VALVOLA GAS CALDO	ENS. VANNE GAZ CHAUDS	HEISSGASVENTIL
10	CM 19177503	CONDENSER	CONDENSATORE	CONDENSEUR	KONDENSATOR
11	CM 18562515	FAN MOTOR ASSY	ASS. MOTOVENTILATORE	ENS. MOTOVENTILATEUR	LUFTERMOTOR KOMPL.
*	CM 19550618	HIGH PRESS. SWITCH	PRESSOSTATO DI ARIA	PRESSOSTAT HP.	HOCKDRUCKPRESSOSTAT

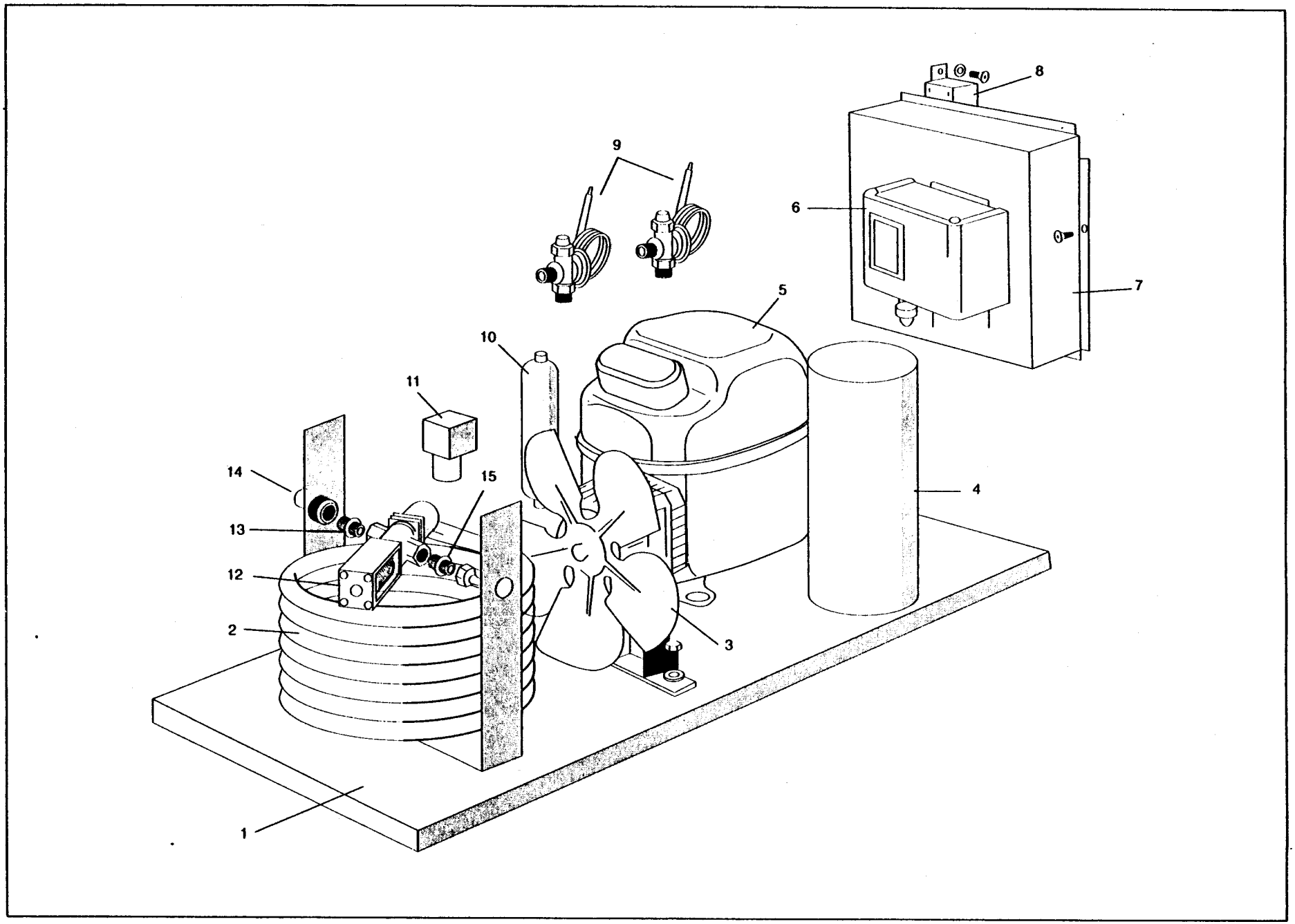
1
2
3
4
5
6
7
8
9
10
11
12
13
14
15

SV 530 - CONDENSING UNIT-WATER COOLED - UNITA' CONDENSATRICE-RAFFR. AD ACQUA
UNITE DE CONDENSATION-REFROID. PAR EAU - WASSER GEKUHLTS KÄLTEAGGREGAT

ITEM NO POS NO REP. NO REF. NO	PART NO CODICE REFERENCE STUECK NR.	DESCRIPTION	DESCRIZIONE	DESIGNATION	BESCHREIBUNG
1	CM 81453231	UNIT BASE	BASAMENTO	ENS. CHASSIS	GEHAEUSETEILE
2	CM 81453271	CONDENSER	CONDENSATORE	CONDENSEUR	KONDENSATOR
3	CM 19865525	FAN MOTOR ASSY	ASS. MOTOVENTILATORE	ENS. MOTOVENTILATEUR	LUFTERMOTOR KOMPL.
4	CM 19635331	LIQUID RECEIVER	RICEVITORE DI LIQUIDO	BOUTEILLE LIQUIDE	FLUSSIGKEITSSAMMLER
5	CM 19165526 CM 19165562	COMPRESSOR ASSY - R 22 COMPRESSOR ASSY - R 404 A	ASS. COMPRESSORE - R 22 ASS. COMPRESSORE - R 404 A	ENS. COMPRESSEUR - R 22 ENS. COMPRESSEUR - R 404 A	KOMPRESSOREINHET - R 22 KOMPRESSOREINHET - R 404 A
6	CM 19550615 CM 19550618	HIGH PRESSURE CONTROL - R 22 HIGH PRESSURE CONTROL - R 404 A	PRESSOSTATO DI ALTA - R 22 PRESSOSTATO DI ALTA - R 404 A	PRESSOSTAT H.P. - R 22 PRESSOSTAT H.P. - R 404 A	HOCKDRUCKPRESSOSTAT - R 22 HOCKDRUCKPRESSOSTAT - R 404 A
7	CM 81453278	CONTROL BOX COVER	COPERCHIO SC. ELETTRICA	COUVERCLE BOITE ELECTRIQUE	SCHALTSCHRANK DECKEL
8	CM 33701047	CONTACTOR	TELERUTTORE	CONTACTEUR	SCHALTSCHÜTZ-(FERNSCHALTER)
9	CM 19870627 CM 19870842	THERM. EXP. VALVE - R 22 THERM. EXP. VALVE - R 404 A	VALVOLA ESPANS. TERMOSTATICA - R 22 VALVOLA ESPANS. TERMOSTATICA - R 40A A	DETENDEUR - R 22 DETENDEUR - R 404 A	EXPANSION VENTIL - R 22 EXPANSION VENTIL - R 404 A
10	CM 19300355	DRIER	FILTRO	DESHIDRATEUR	TROCKNER
11	CM 19863034	HOT GAS VALVE ASSY	ASS. VALVOLA GAS CALDO	ENS. VANNE GAZ CHAUDS	HEISSGASVENTIL
12	620111 00	WATER REGULATING VALVE	VALVOLA REGOLAZIONE ACQUA	VANNE REGULATION EAU	WASSER REGLER VENTIL
13	CM 25631013	WATER FITTING-IN	RACCORDO IDRAULICO	RACCORD-ARRIVÉE EAU	WASSEREINLAUFSTUECK
14	CM 25631039	WATER FITTING-IN	RACCORDO IDRAULICO	RACCORD-ARRIVÉE EAU	WASSEREINLAUFSTUECK
15	CM 19320310	WATER FITTING-OUT	RACCORDO IDRAULICO	RACCORD ÉVACUATION EAU	WASSERABFLUSSSTUECK