Mod./Type: **_70/... FT...G... - _90/... FT...G...**

EXTREME

cod./num. 2531681.00

data/date: 16/06/2014

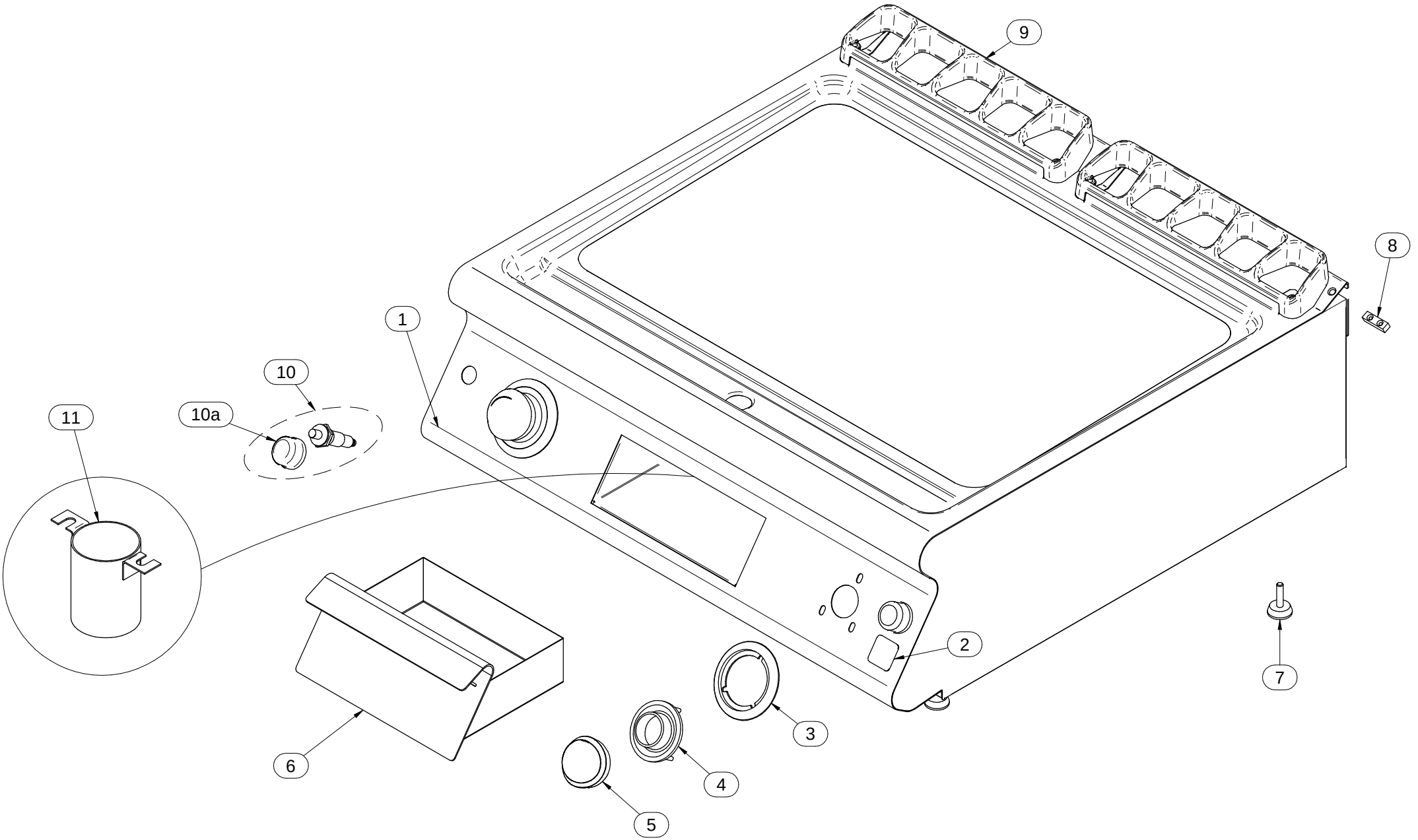

Mod./Type: **_70/... - 90/... FT...GS... SIMPLE**

_70/... - 90/... FT...G... EXTREME

cod./num. 2531677.00

data/date: 16/06/2014

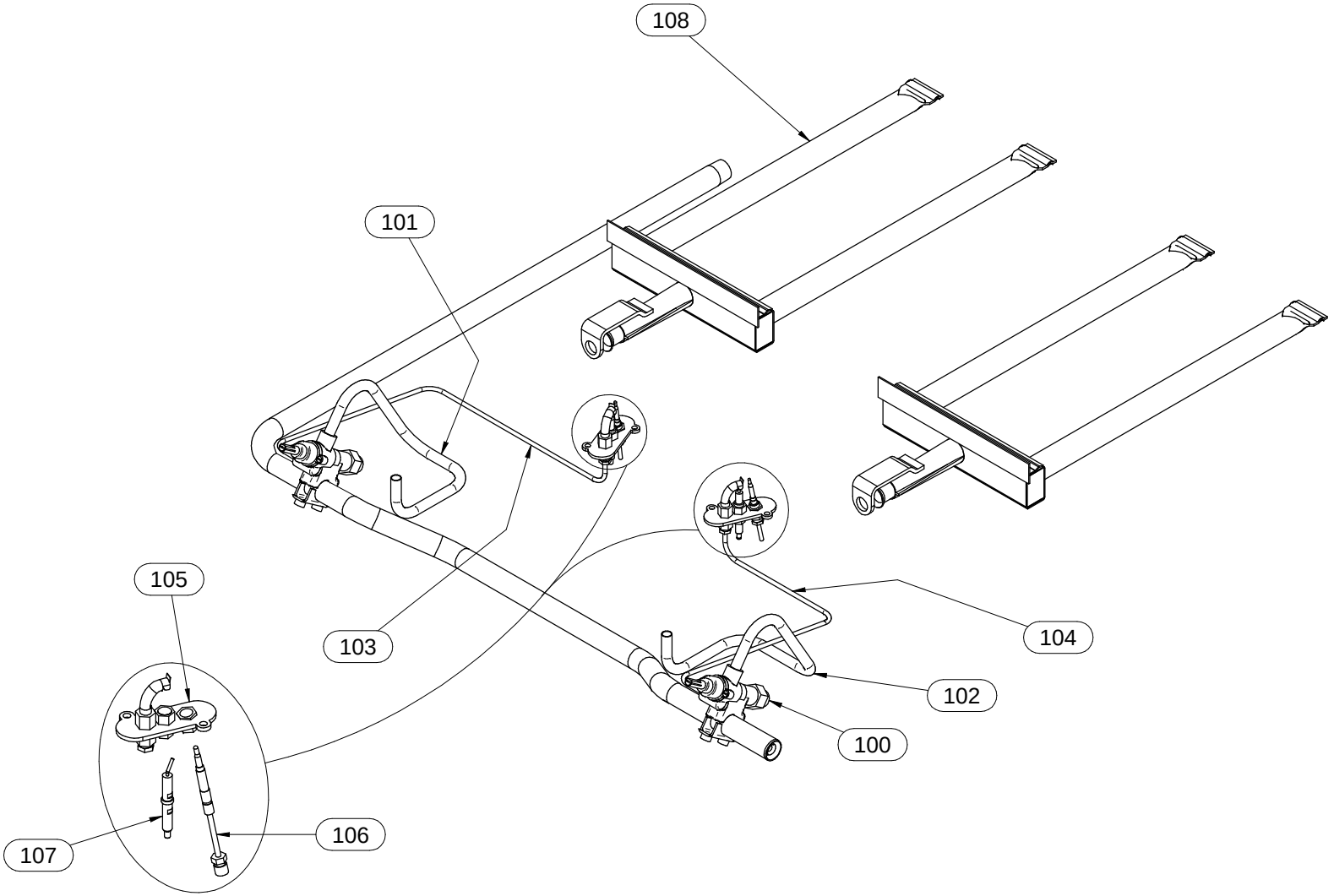

Mod./Type: **EM70 - EM90 .../40 ... - .../80 ... - .../120 ...**

EM90/160 ... VANO / CABINET

cod./num. 2531578.00

data/date: 05/06/2014

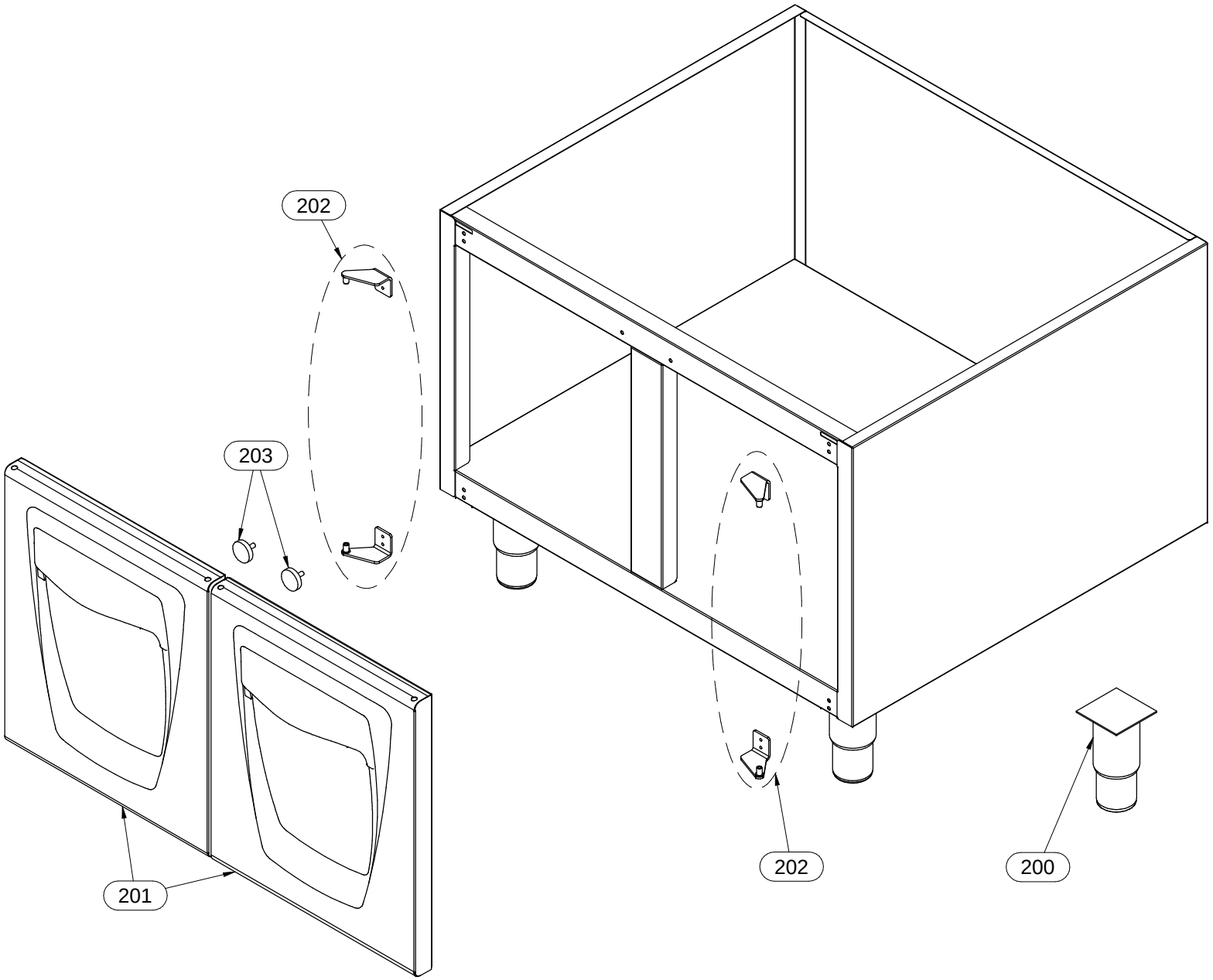

Mod.:	_70/… FT…G… _90/… FT…G… EXTREME			cod. / num. 2531682.00 data / date 16/06/2014 rif. / ref. 2531681.00		EM70/40 FT…G…	EM70/80 FT…G…	EM90/40 FT…G…	EM90/80 FT…G…	EM90/40 FT…G-CR… - FT…G-TR	EM90/80 FT…G-CR… - FT…G-TR	NOTE	
POS.	DESCRIZIONE	DESCRIPTION	DENOMINATION	BENENNUNG	COD.	Q. ty							
1	CRUSCOTTO	CONTROL PANEL	BANDEAU	BEDIENBLENDE	6111246.00	1		1		1			
					6111247.00		1		1		1		
2	MARCHIO	BRAND NAME	MARQUE	MARKENZEICHEN	982.021.00	1	1	1	1	1	1	**FROM: 15.12.2011**	**TO: 31.01.2014**
					982.023.00	1	1	1	1	1	1	**FROM: 01.02.2014**	**TO:…**
3	SERIGRAFIA	SCREEN PRINT	SÉRIGRAPHIE	SIEBDRUCK	910.163.00	1	2	1	2				
					910.166.00					1	2		
4	LABIRINTO	LABYRINTH	LABYRINTHE	LABYRINTH	256.235.00	1	2	1	2	1	2		
5	MANOPOLA	KNOB	BOUTON	DREHKNOPF	256.217.00	1	2	1	2				
					256.243.00					1	2		
6	CASSETTO	DRAWER	TIROIR	SCHUBLADE	6111248.00	1		1		1			
					6111249.00		1		1		1		
7	PIEDINO	FOOT	PIED	STELLFUSS	951.050.00	4	4	4	4	4	4	SOLO VERSIONE (-T)	ONLY (-T) VERSION
8	PIASTRINA GIUNZIONE	FIXING PLATE	PLAQUETTE FIXAGE	BEFESTIGUNGSPLATTE	941.130.00	1	1	1	1	1	1		
9	GRIGLIA CAMINO	FLUE GRIDDLE	GRILLE POUR CHEMINÉE	KAMINROST	982.012.00	1	2	1	2	1	2		
10	ACCENDITORE PIEZO	PIEZO LIGHTER	ALLUMEUR PIEZO	PIEZOZÜNDER	912.091.00	1	2	1	2	1	2		
10a	CAPPUCCIO	CAP	CAPUCHON	KAPPE	951.047.00	1	2	1	2	1	2		
11	SCARICO	DRAIN	VIDANGE	ABLAUF	631.175.00	1	1	1	1	1	1		
12													
13													
14													
15													
16													
17													
18													
19													
20													
21													
22													
23													
24													
25													
26													
27													
28													
29													
30													
31													
32													
33													
34													

Mod.:	_70/... FT...GS... $ SIMPLE _70/... FT... XT EXTREME			cod. / num. 2531678.00 data / date 17/06/2014 rif. / ref. 2531677.00		_70/40 FT...GS...	_70/80 FT...GS...	_70/40 FT...G...	_70/80 FT...G...	NOTE
POS.	DESCRIZIONE	DESCRIPTION	DENOMINATION	BENENNUNG	COD.	Q. ty				
100	RUBINETTO GAS	GAS TAP	ROBINET GAZ	GASHAHN	671.088.00	1	2	1	2	
101	TUBO GAS	GAS PIPE	TUBE GAZ	GASROHR	256.282.00	1	1			
					256.286.00			1	1	
102	TUBO GAS	GAS PIPE	TUBE GAZ	GASROHR	256.283.00	-	1			
					256.287.00			-	1	
103	TUBO GAS	GAS PIPE	TUBE GAZ	GASROHR	256.284.00	1	1			
					256.288.00			1	1	
104	TUBO GAS	GAS PIPE	TUBE GAZ	GASROHR	256.285.00	-	1			
					256.289.00			-	1	
105	GRUPPO PILOTA	PILOT GROUP	GROUPE VEILLEUSE	ZÜNDBRENNER GRUPPE	672.173.00	1	2	1	2	
106	TERMOCOPPIA	THERMOCOUPLE	THERMOCOUPLE	THERMOELEMENT	672.168.00	1	2	1	2	
107	CANDELA ACCENSIONE	IGNITION ELECTRODE	BOUGIE D'ALLUMAGE	KERZE SCHNELLBRENNER	256.060.00	1	2	1	2	
108	BRUCIATORE	BURNER	BRULEUR	BRENNER	672.153.00	1	2	1	2	
109										
110										
111										
112										
113										
114										
115										
116										
117										
118										
119										
120										
121										
122										
123										
124										
125										
126										
127										
128										
129										
130										
131										
132										
133										

Mod.:	EM70/... - EM90/… VANO / CABINET			cod. / num. 2531579.00 data / date 05/06/2014 rif. / ref. 2531578.00		EM70/40 ...	EM70/80 ...	EM70/120 ...	EM90/40 ...	EM90/80 ...	EM90/120 ...	EM90/160 ...	NOTE	
POS.	DESCRIZIONE	DESCRIPTION	DENOMINATION	BENENNUNG	COD.	Q. ty								
200	PIEDINO	FOOT	PIED	STELLFUSS	912.090.00	4	4	4	4	4	4	6	FROM: 15.12.2011	TO: 17.05.2013
					912.090.14	4	4	4	4	4	4	6	FROM: 18.05.2013	TO:...
201	PORTA	DOOR	PORTE	TÜR	256.215.00	1	2	3	1	2	3	4		
202	COPPIA CERNIERE	GASKETS PAIR	COUPLE CHARNIÈRES	SCHARNIERPAAR	256.216.00	1	2	3	1	2	3	4		
203	MAGNETE	MAGNET	MAGNÉTO	MAGNET	684.007.00	1	2	3	1	2	3	4	FROM: 15.12.2011	TO: 01.01.2014
					984.006.00	1	2	3	1	2	3	4	FROM: 02.01.2014	TO:...
204														
205														
206														
207														
208														
209														
210														
211														
212														
213														
214														
215														
216														
217														
218														
219														
220														
221														
222														
223														
224														
225														
226														
227														
228														
229														
230														
231														
232														
233														
234														