Mod./Type:	_70/... PVE... _90/... PVE...	cod./num.	2531808.00
		data/date:	04/08/2014

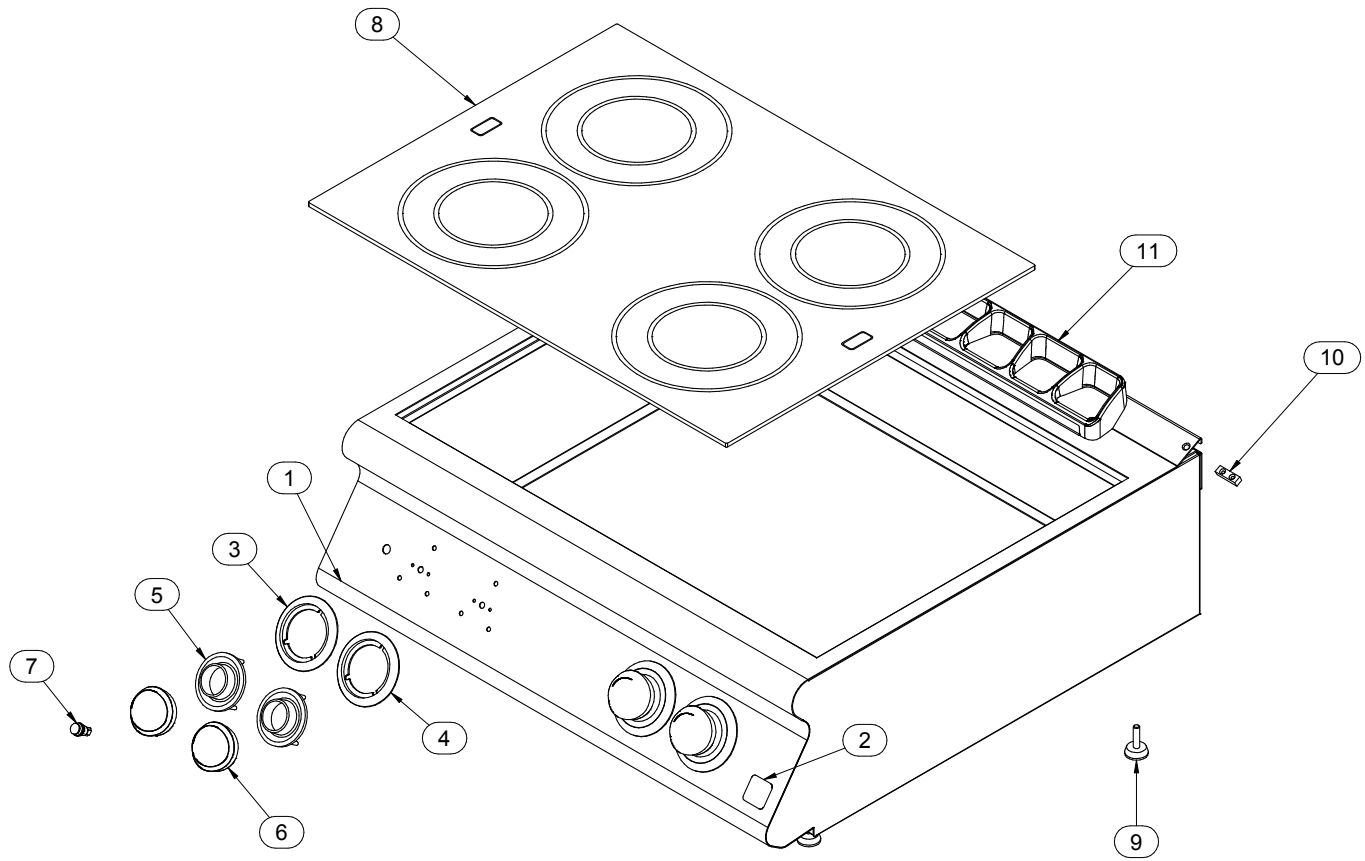

Mod./Type:	_70/... PVE... - ...CFVE...	cod./num.	2531810.00
	_90/... PVE... - ...CFVE...	data/date:	06/08/2014

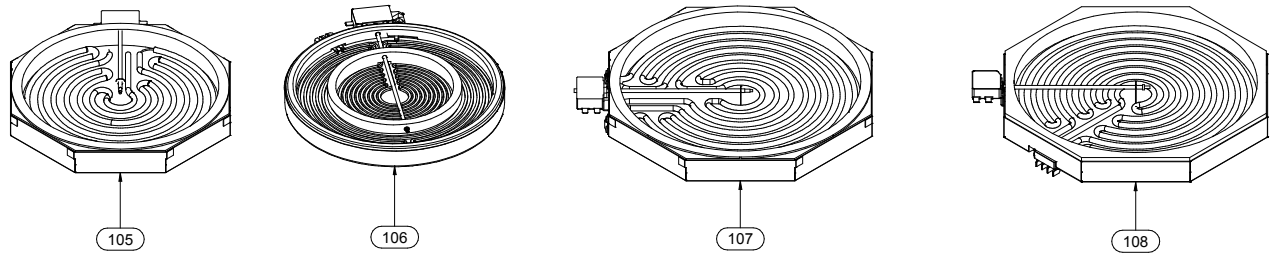

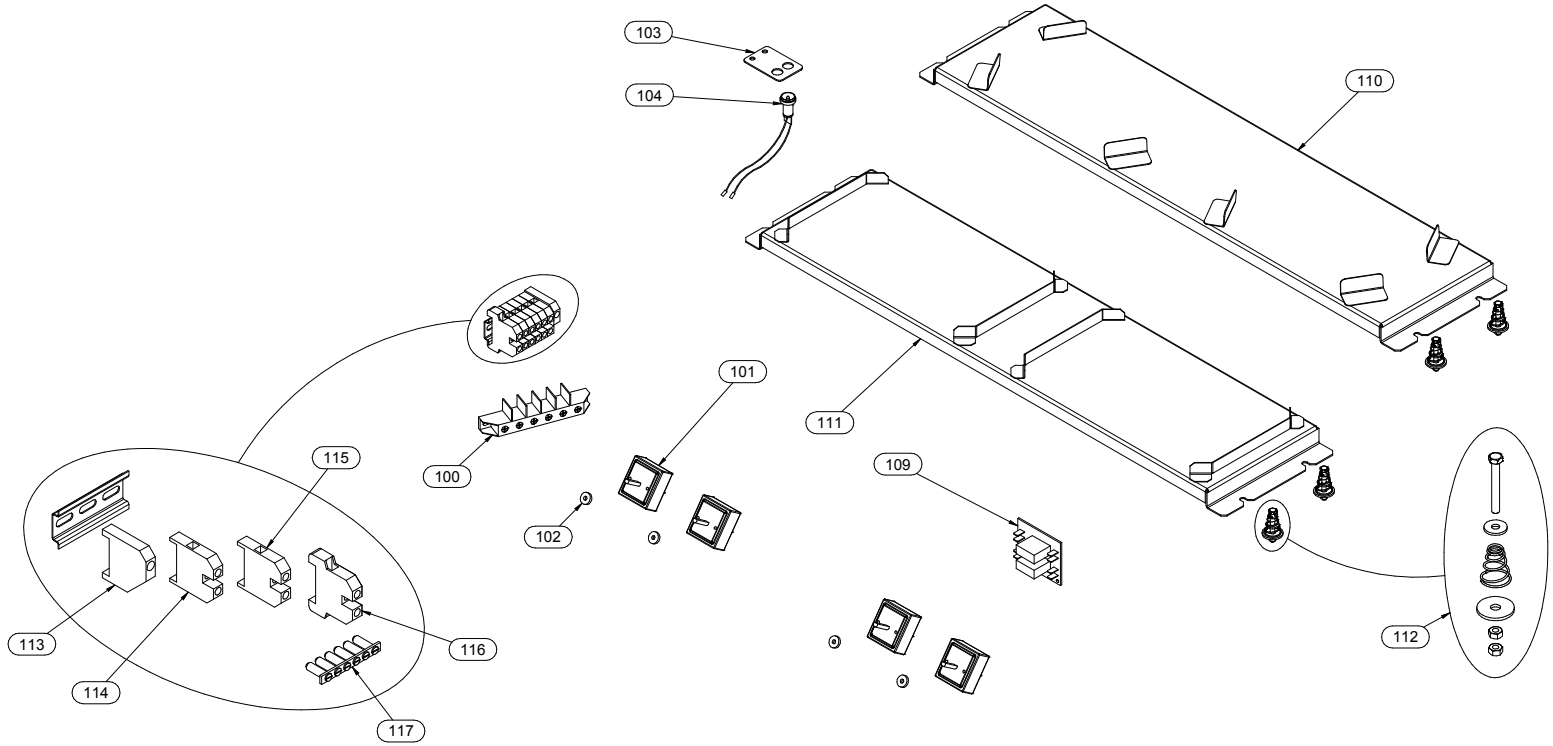

Mod./Type: **_70 - _90 .../40 ... - .../80 ... - .../120 ...**

VANO / CABINET - ...B - ...BE - ...BH2

cod./num. 2531578.00

data/date: 05/06/2014

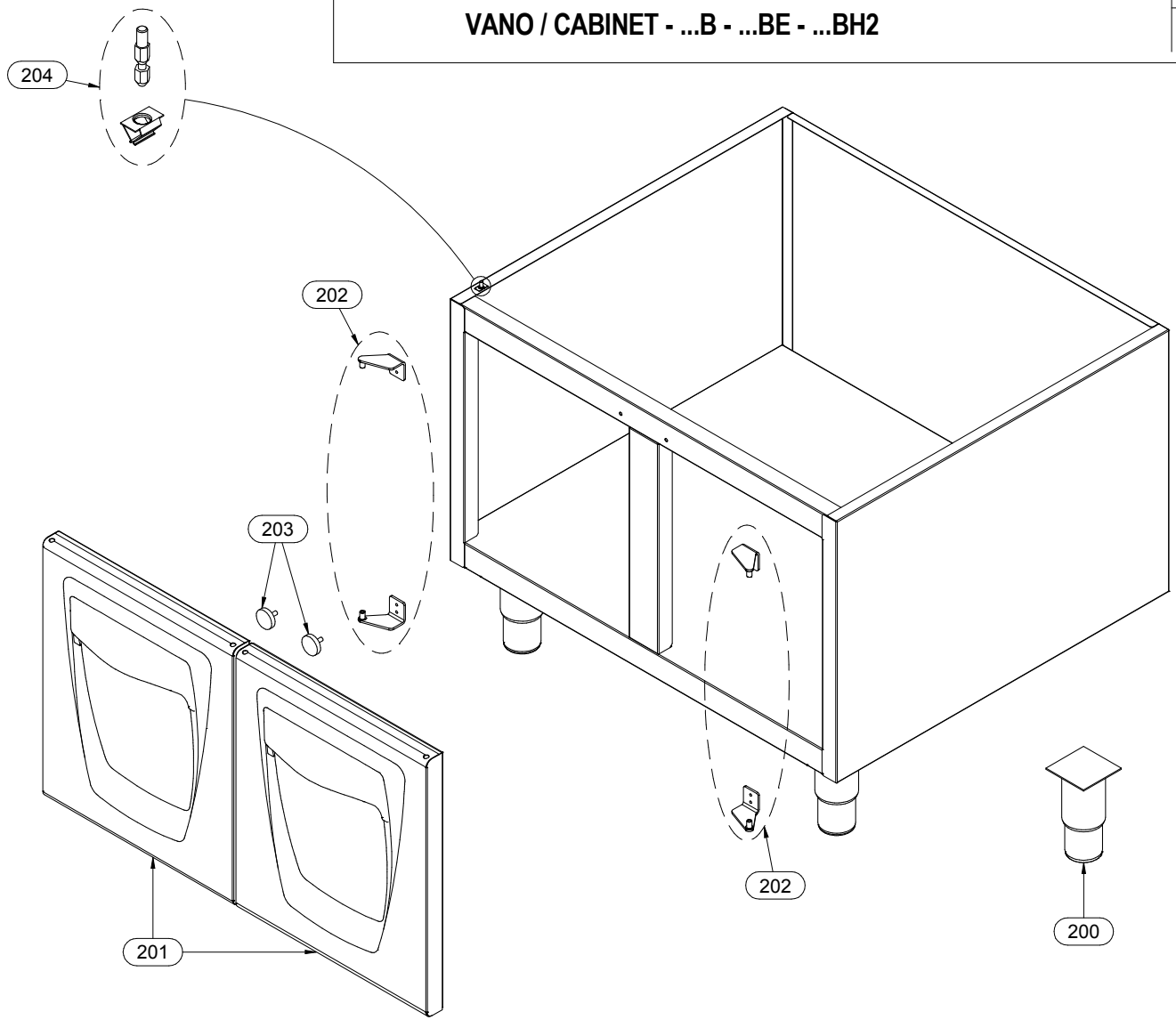

Mod.:	_70/... PVE… _90/… PVE…			cod. / num. 2531809.00 data / date 01/08/2014 rif. / ref. 2531808.00		EM70/40 PVE...	EM70/80 PVE...	EM70/120 PVE...	EM90/40 PVE...	EM90/80 PVE...	EM90/120 PVE...	NOTE	
POS.	DESCRIZIONE	DESCRIPTION	DENOMINATION	BENENNUNG	COD.	Q. ty							
1	CRUSCOTTO	CONTROL PANEL	BANDEAU	BEDIENBLENDE	6111174.00	1			1				
					6111175.00		1			1			
					9111295.00			1			1		
2	MARCHIO	BRAND NAME	MARQUE	MARKENZEICHEN	982.021.00	1	1	1	1	1	1	**FROM: 15.12.2011**	**TO: 31.01.2014**
					982.023.00	1	1	1	1	1	1	**FROM: 01.02.2014**	**TO:...**
3	SERIGRAFIA	SCREEN PRINT	SÉRIGRAPHIE	SIEBDRUCK	910.171.00	1	2	3	1	2	3		
4	SERIGRAFIA	SCREEN PRINT	SÉRIGRAPHIE	SIEBDRUCK	910.172.00	1	2	3	1	2	3		
5	LABIRINTO	LABYRINTH	LABYRINTHE	LABYRINTH	256.235.00	2	4	6	2	4	6		
6	MANOPOLA	KNOB	BOUTON	DREHKNOPF	256.234.00	2	4	6	2	4	6		
7	LAMPADA SPIA ARANCIO	ORANGE INDICATOR LIGHT	LAMPE TEMOIN ORANGE	ORANGE KONTROLLAMPE	963.013.00	1	1	1	1	1	1		
8	VETROCERAMICO	GLASS-CERAMIC	VITRO-CÉRAMIQUE	GLASKERAMIK	655.013.00	1		-				**FROM: 15.12.2011**	**TO: 31.03.2014**
					655.015.00	1		3				**FROM: 01.04.2014**	**TO:...**
					655.014.00		1					**FROM: 15.12.2011**	**TO: 31.03.2014**
					655.016.00		1					**FROM: 01.04.2014**	**TO:...**
					955.010.00				1		-	**FROM: 15.12.2011**	**TO: 31.03.2014**
					955.014.00				1		3	**FROM: 01.04.2014**	**TO:...**
					955.011.00					1		**FROM: 15.12.2011**	**TO: 31.03.2014**
					955.015.00					1		**FROM: 01.04.2014**	**TO:...**
9	PIEDINO	FOOT	PIED	STELLFUSS	951.050.00	4	4	4	4	4	4	SOLO VERSIONE (-T)	ONLY (-T) VERSION
10	PIASTRINA GIUNZIONE	FIXING PLATE	PLAQUETTE FIXAGE	BEFESTIGUNGSPLATTE	941.130.00	1	1	1	1	1	1		
11	GRIGLIA CAMINO	FLUE GRIDDLE	GRILLE POUR CHEMINÉE	KAMINROST	982.012.00	1		1	1		1		
					982.013.00		1			1			
12													
13													
14													
15													
16													
17													
18													
19													
20													
21													
22													
23													
24													
25													

Mod.:	_70/... PVE... - CFVE... _90/... PVE... - CFVE...			cod. / num. 2531811.00 data / date 24/04/2014 rif. / ref. 2531810.00		RICAMBI CONSIGLIATI - RECOMMENDED SPARE PARTS - PIÈCES DÉTACHÉES RECOMMANDÉES - EMPFOHLENEN ERSATZTEILE	_70/40 PVE...	_70/80 PVE... - _70/80 CFVE	_70/80 CFVE2	_70/120 PVE...	_90/40 PVE...	_90/80 PVE... - ...CFVE - ...CFVEV	_90/80 PVE2...- ...CFVE2 - ...CFVEV2	_90/120 PVE...	NOTE	
POS.	DESCRIZIONE	DESCRIPTION	DENOMINATION	BENENNUNG	COD.		Q.ty									
100	MORSETTIERA	TERMINAL BOARD	BORNES	KLEMMENBRETT	M566050500		1	1	-	-	1	1	-	-	FROM: 15.12.2011	TO: 31.03.2014
					612.130.00		1	1	-	-	1	1	-	-	FROM: 01.04.2014	TO:...
101	REGOLATORE ENERGIA	ENERGY REGULATOR	REGLEUR D'ENERGIE	ENERGIEREGLER	661.102.00	*	2	4	4	6	2	4	4	6		
102	GUARNIZIONE	WASHER	GUARNITURE	DICHTUNGSRING	953.020.00		2	4	4	6	2	4	4	6		
103	SUPPORTO	SUPPORT	SUPPORT	UNTERSTÜTZUNG	6221484.00		1	2	2	3	1	2	2	3		
104	LAMPADE CALORE RESIDUO	RESIDUAL HEAT INDICATOR LAMPS	TÉMOINS DE CHALEUR RÉSIDUELLE	RESTHITZELAMPE	663.082.00		2	4	4	6	2	4	4	6		
105	RESISTENZA 2,5kW	HEATING ELEMENT 2,5kW	RESISTANCE 2,5kW	HEINZELEMENT 2,5kW	665.052.00	*	2	4	4	-	-	-	-	-	FROM: 15.12.2011	TO: 31.03.2014
106	RESISTENZA 2,5kW	HEATING ELEMENT 2,5kW	RESISTANCE 2,5kW	HEINZELEMENT 2,5kW	665.106.00	*	2	4	4	6	-	-	-	-	FROM: 01.04.2014	TO:...
107	RESISTENZA 3,4kW	HEATING ELEMENT 3,4kW	RESISTANCE 3,4kW	HEINZELEMENT 3,4kW	965.041.00	*	-	-	-	-	2	4	4	-	FROM: 15.12.2011	TO: 31.03.2014
108	RESISTENZA 3,4kW	HEATING ELEMENT 3,4kW	RESISTANCE 3,4kW	HEINZELEMENT 3,4kW	965.069.00	*	-	-	-	-	2	4	4	6	FROM: 01.04.2014	TO:...
109	SCHEDA RELÉ	RELAY BOARD	CARTE DE RELAIS	RELAISPLATINE	663.048.00	*	-	-	-	-	2	4	4	6		
110	SUPPORTO RESISTENZE	HEATING ELEMENTS SUPPORT	SUPPORT ÉLÉMENTS CHAUFFANTS	HEIZELEMENTE TRÄGER	256.425.00		2			6	-	-	-	-		
					256.426.00			2	2		-	-	-	-		
111	SUPPORTO RESISTENZE	HEATING ELEMENTS SUPPORT	SUPPORT ÉLÉMENTS CHAUFFANTS	HEIZELEMENTE TRÄGER	256.427.00		-	-	-	-	2			6		
					256.428.00		-	-	-	-		2	2			
112	FISSAGGIO	FIXING	FIXAGE	BEFESTIGUNG	256.424.00		8	8	8	24	8	8	8	24		
113	BLOCCAMORSETTI	TERMINAL STOPPER	BORNE BLOQUANT	BLÖCK-KLEMME	663.059.00		-	-	1	1	-	-	1	1		
114	MORSETTO	TERMINAL	BORNE	KLEMME	663.061.00		-	-	6	3	-	-	6	3		
115	MORSETTO BLU	BLUE TERMINAL	BORNE BLUE	NULL-KLEMME	663.076.00		-	-	-	3	-	-	-	3		
116	MORSETTO TERRA - PE	PE-TERMINAL	BORNE PE	ERD-KLEMME	663.060.00		-	-	1	1	-	-	1	1		
117	BARRETTE COLLEGAMENTO	CONNECTOR PIN	BARRETTE DE CONNECTION	VERBINDUNG-STAB	663.056.00		-	-	1	1	-	-	1	1		
118																
119																
120																
121																
122																
123																
124																
125																
126																
127																
128																
129																
130																
131																
132																
133																
134																
135																
136																
137																
138																
139																
140																
141																
142																
143																
144																

Mod.:	_70/... - _90/… VANO / CABINET …B - …BE - …BH2			cod. / num. 2531579.00 data / date 05/06/2014 rif. / ref. 2531578.00		RICAMBI CONSIGLIATI - RECOMMENDED SPARE PARTS - PIÈCES DÉTACHÉES RECOMMANDÉES - EMPFOHLENEN ERSATZTEILE	EM70/40 ...	EM70/80 ...	EM70/120 ...	EM90/40 ...	EM90/80 ...	EM90/120 ...	NOTE	
POS.	DESCRIZIONE	DESCRIPTION	DENOMINATION	BENENNUNG	COD.		Q. ty							
200	PIEDINO	FOOT	PIED	STELLFUSS	912.090.00		4	4	4	4	4	4	FROM: 15.12.2011	TO: 17.05.2013
					912.090.14		4	4	4	4	4	4	FROM: 18.05.2013	TO:...
201	PORTA	DOOR	PORTE	TÜR	256.215.00		1	2	3	1	2	3		
202	COPPIA CERNIERE	GASKETS PAIR	COUPLE CHARNIÈRES	SCHARNIERPAAR	256.216.00		1	2	3	1	2	3		
203	MAGNETE	MAGNET	MAGNÉTO	MAGNET	684.007.00		1	2	3	1	2	3	FROM: 15.12.2011	TO: 01.01.2014
					984.006.00		1	2	3	1	2	3	FROM: 02.01.2014	TO:...
204	FISSAGGIO	FIXING	FIXAGE	BEFESTIGUNG	256.431.00		4	4	4	4	4	4	FROM: 04.05.2015	TO:...
205														
206														
207														
208														
209														
210														
211														
212														
213														
214														
215														
216														
217														
218														
219														
220														
221														
222														
223														
224														
225														
226														
227														
228														
229														
230														
231														
232														
233														
234														