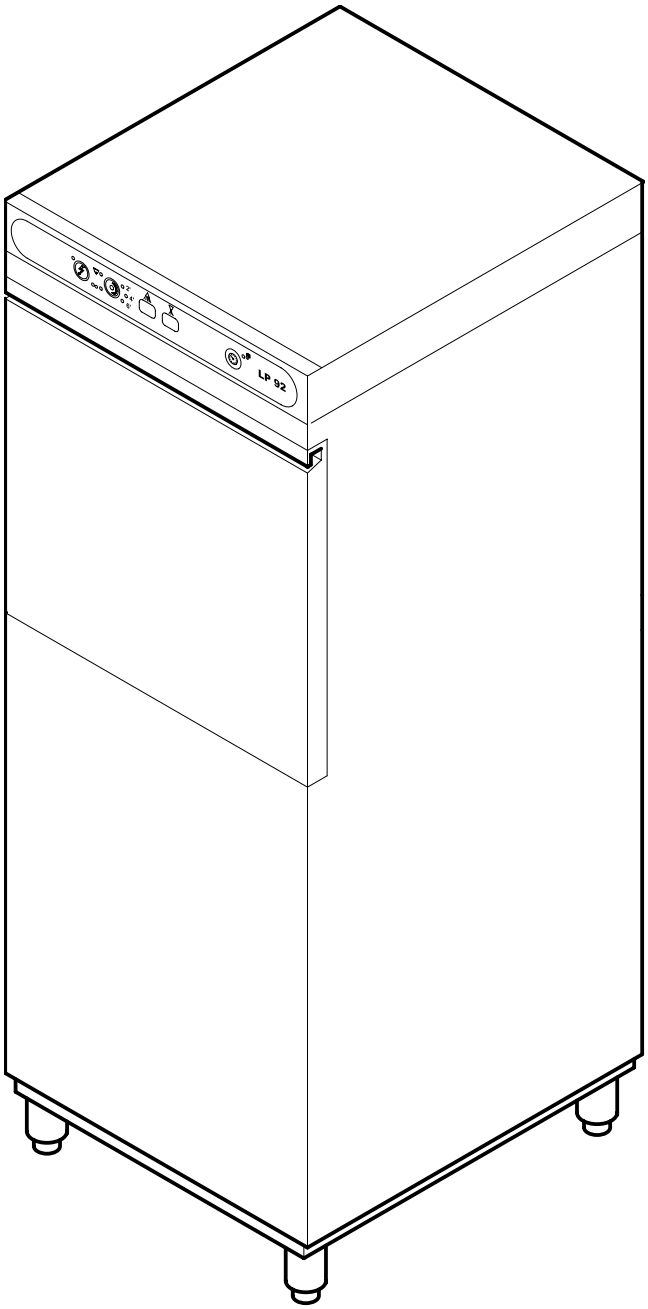

GOLD LP92

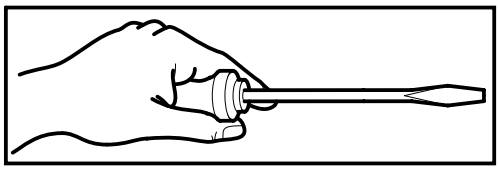

LP - 92

Tav. 1 – Carrozzeria
Tav. 2 – Componenti in vasca
Tav. 2A – Componenti in vasca
Tav. 3 – Impianto elettrico
Tav. 4 – lance lavaggio – Risciacquo
Tav. 5 – Pompa lavaggio
Tav. 5A – Pompa lavaggio
Tav .6 – Pompa Risciacquo

Tav. 1 – Machine Body
Tav. 2 – Components in the tank
Tav. 2A – Components in the tank
Tav. 3 – Electrical components
Tav. 4 – Wash arms – Rinsing
Tav. 5 – Wash pump
Tav. 5A – Wash pump
Tav. 6 – Rinse pump

Tab. 1 – Carroceria
Tab. 2 – Componentes en cuba
Tab. 2A – Componentes en cuba
Tab. 3 – Instalaciòn elèctrica
Tab. 4 – Lances lavages – Enjuague
Tab.5 – Bomba lavado
Tab.5A – Bomba lavado
Tab.6 – Bomba Enjuague

Tab. 1 – Carrosserie
Tab. 2 – Composants de cuve
Tab. 2A – Composants de cuve
Tab. 3 – Installation electrique
Tab. 4 – Rampes de lavage Rinçage
Tab. 5 – Pompe lavage
Tab. 5A – Pompe lavage
Tab. 6 – Pompe Rinçage

Taf. 1 – Verkleidung
Taf. 2 – Bauteile im Waschtank
Taf. 2A – Bauteile im Waschtank
Taf. 3 – Elektrische Anlage
Taf. 4 – Spuelarme – Klarspülung
Taf. 5 – Spülpumpe
Taf. 5A – Spülpumpe
Taf. 6 – Klarspülungpumpe

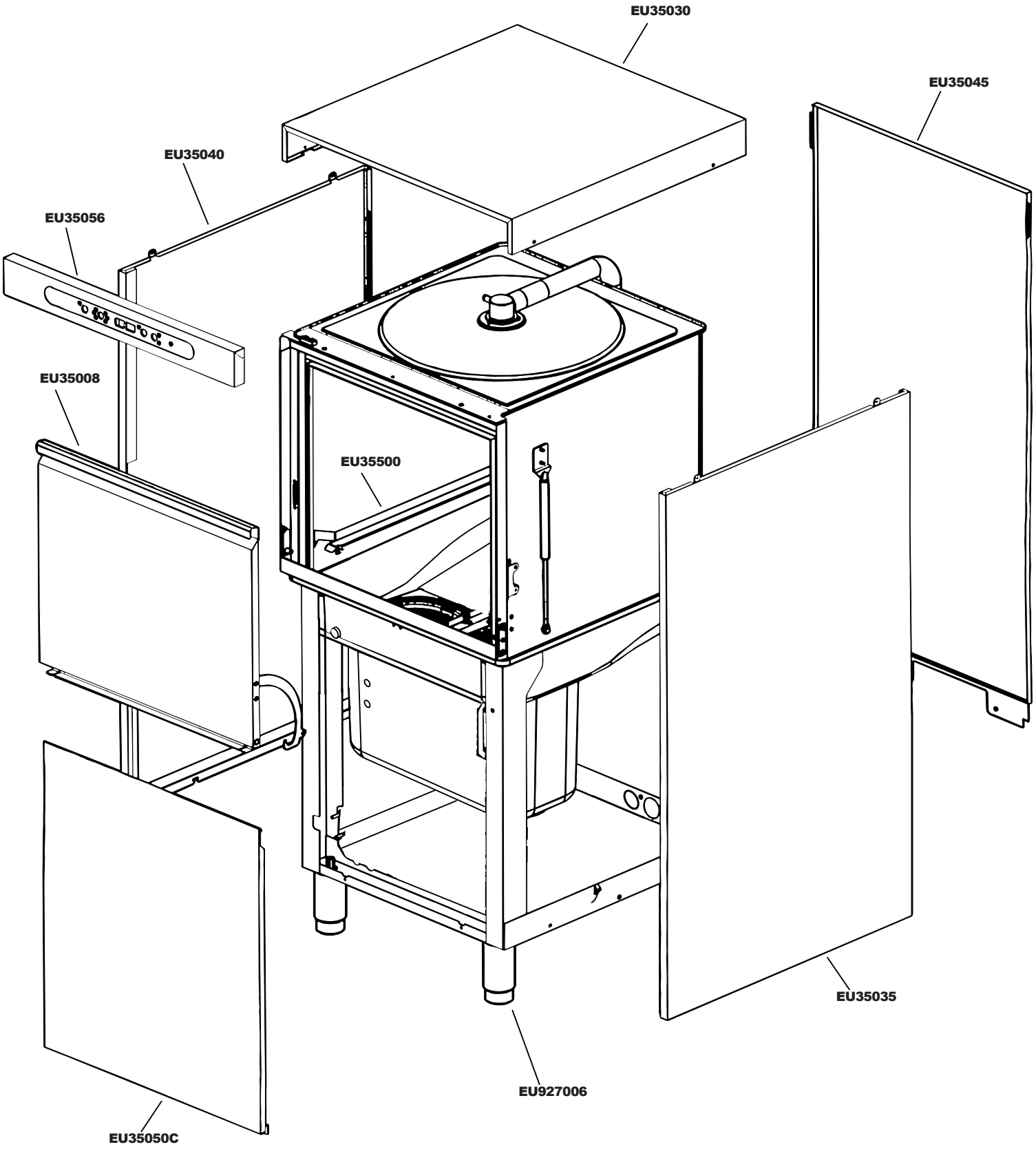
EU35030
EU35045
EU35040
EU35056
EU35008
EU35500
EU35035
EU927006
EU35050C

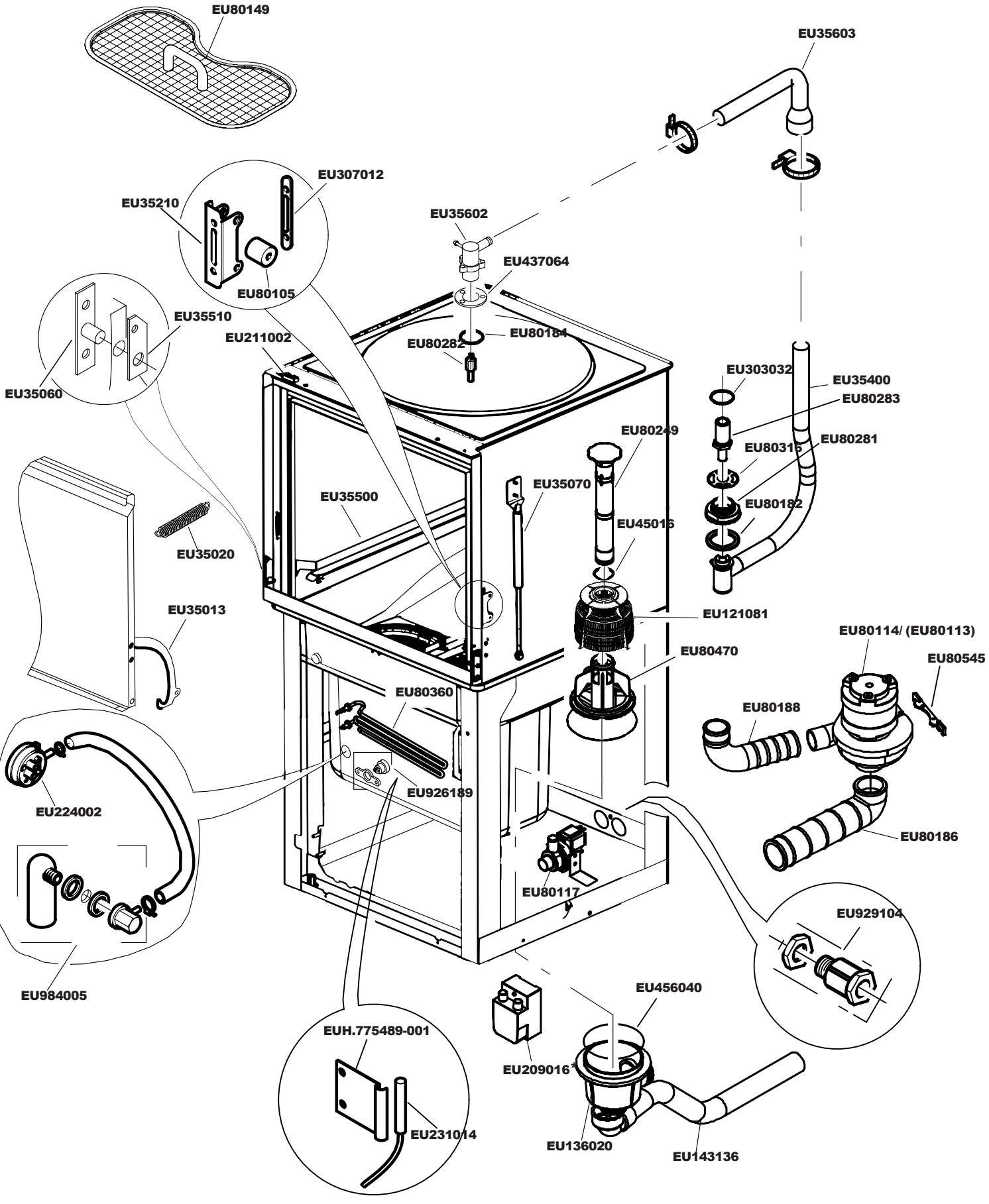
EU80149
EU35603
EU307012
EU35210
EU35602
EU437064
EU80105
EU35510
EU80282
EU80184
EU211002
EU35060
EU303032
EU35400
EU80283
EU80249
EU80281
EU80315
EU35070
EU35500
EU80182
EU45016
EU35020
EU121081
EU35013
EU80114/ (EU80113)
EU80470
EU80545
EU80360
EU80188
EU926189
EU224002
EU80186
EU80117
EU929104
EU984005
EU456040
EUH.775489-001
EU209016*
EU231014
EU136020
EU143136

* OPTIONAL

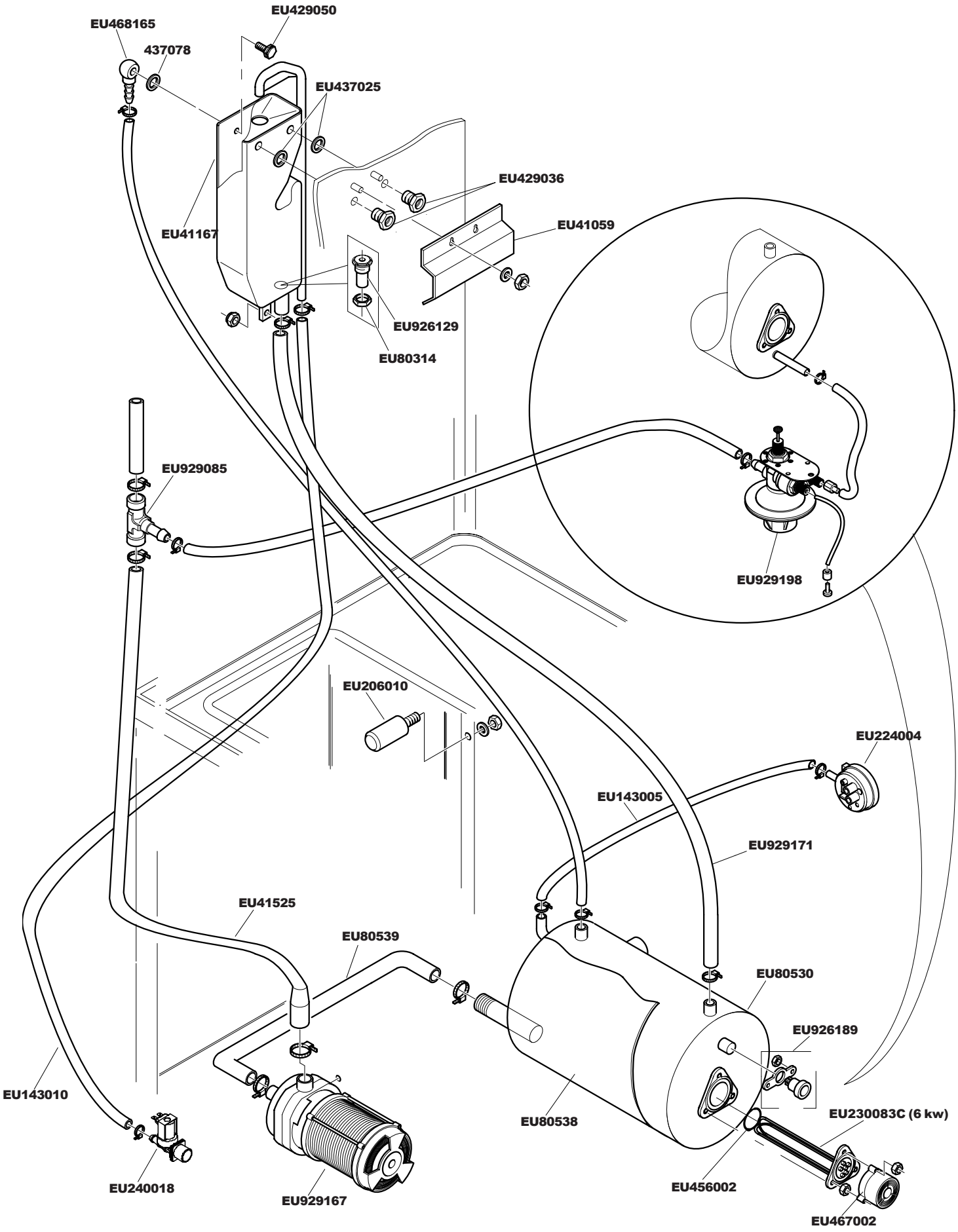
EU429050
EU468165
437078
EU437025
EU429036
EU41059
EU41167
EU926129
EU80314
EU929085
EU929198
EU206010
EU224004
EU143005
EU929171
EU41525
EU80539
EU80530
EU926189
EU143010
EU80538
EU230083C (6 kw)
EU240018
EU929167
EU456002
EU467002

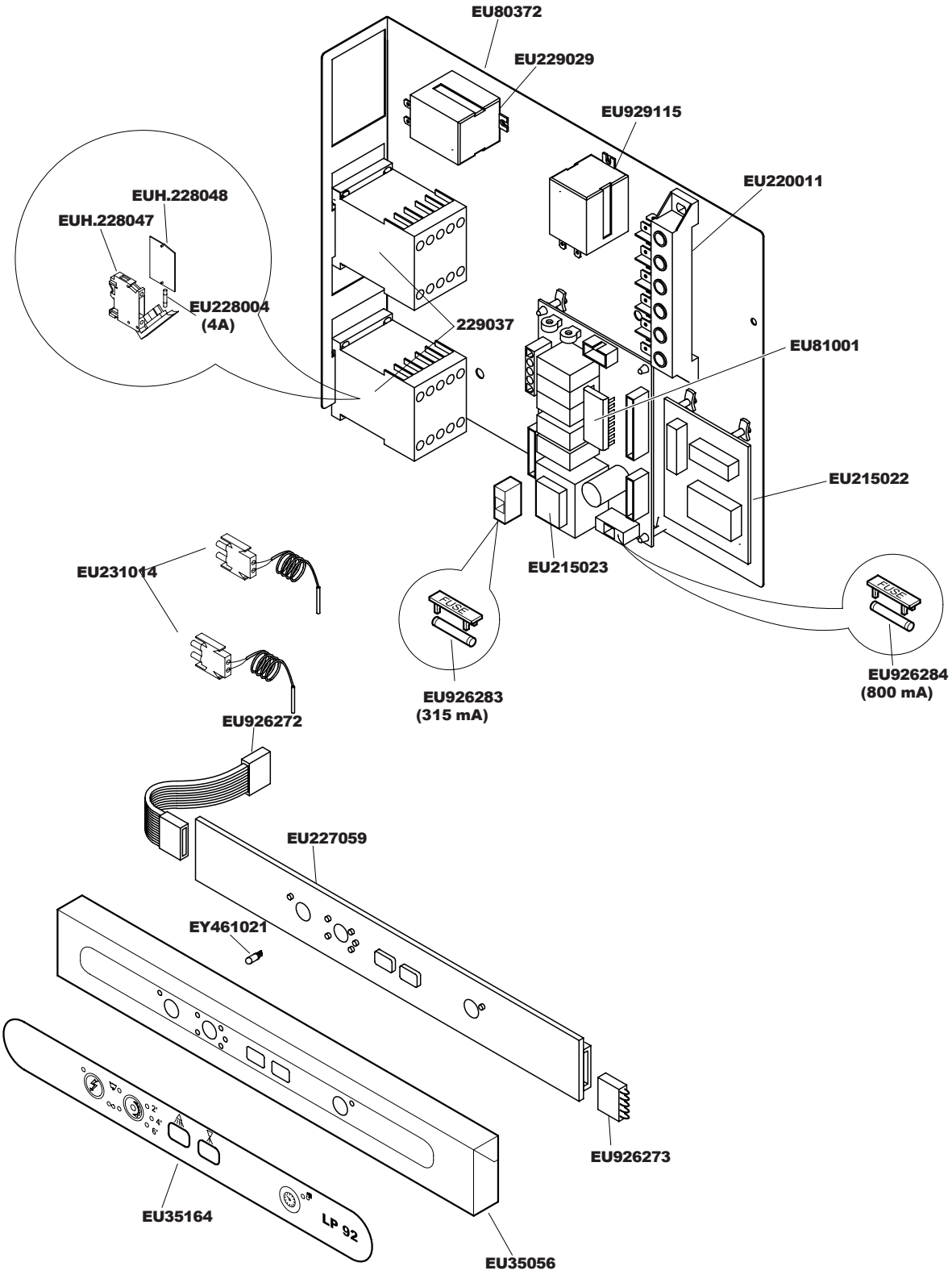
EU80372
EU229029
EU929115
EU220011
EUH.228048
EUH.228047
EU228004
(4A)
229037
EU81001
EU215022
EU231014
EU215023
EU926284
(800 mA)
EU926283
(315 mA)
EU926272
EU227059
EY461021
EU926273
EU35164
LP 92
EU35056

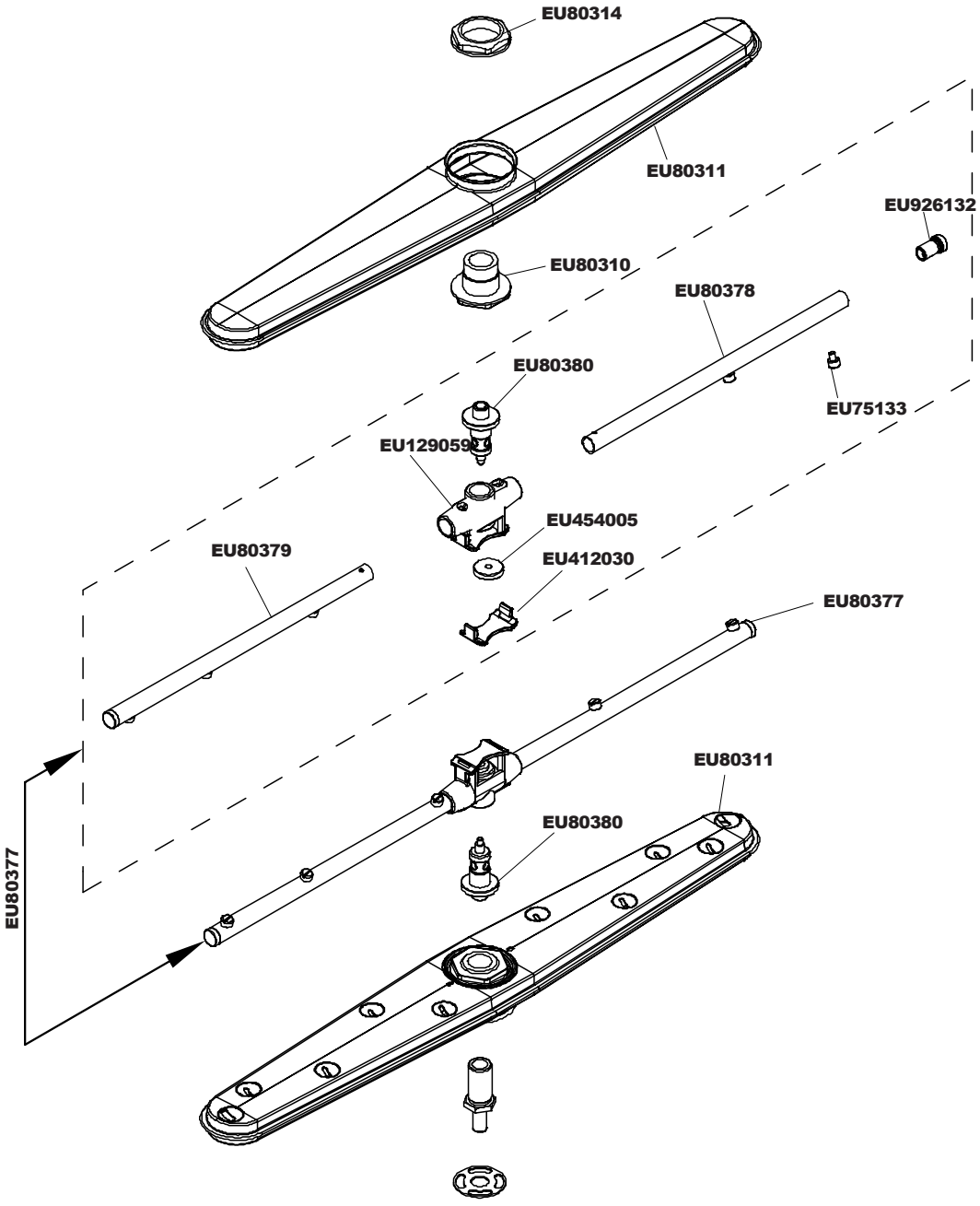
EU80314
EU80311
EU926132
EU80310
EU80378
EU80380
EU75133
EU454005
EU80379
EU412030
EU80377
EU80311
EU80380
EU80377

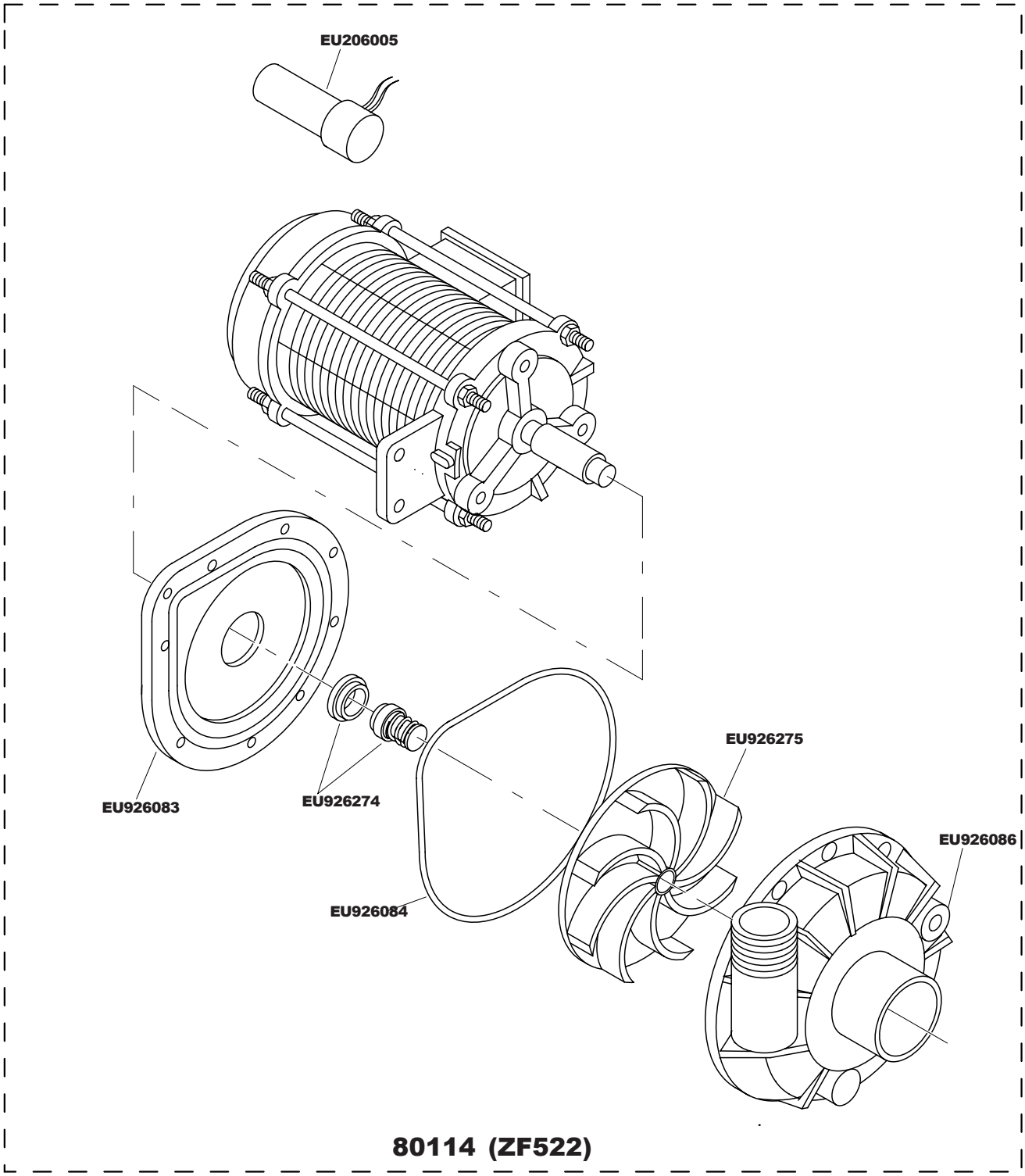

80114 (ZF522)

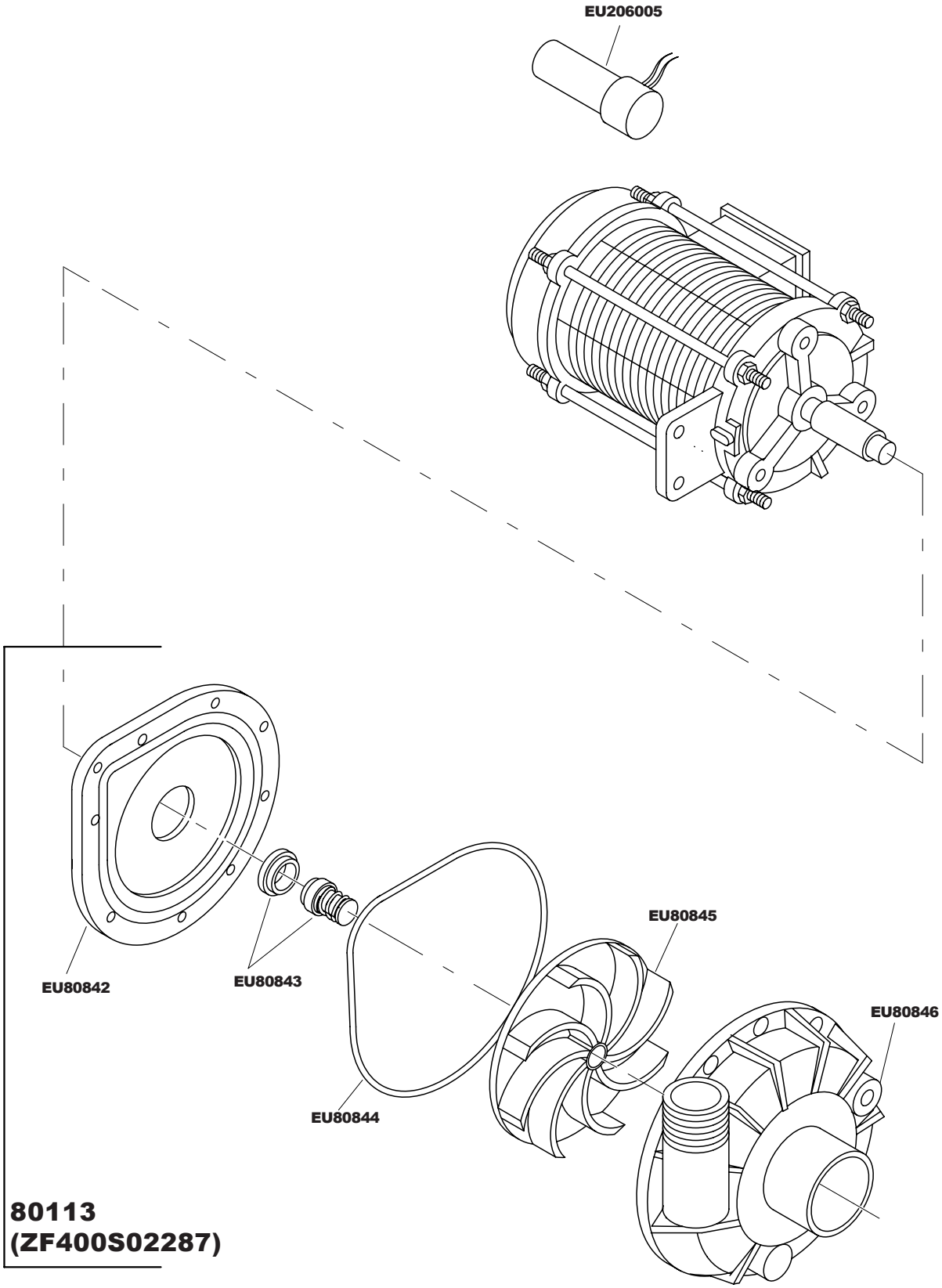
EU206005
EU80842
EU80843
EU80844
EU80845
EU80846
80113
(ZF400S02287)

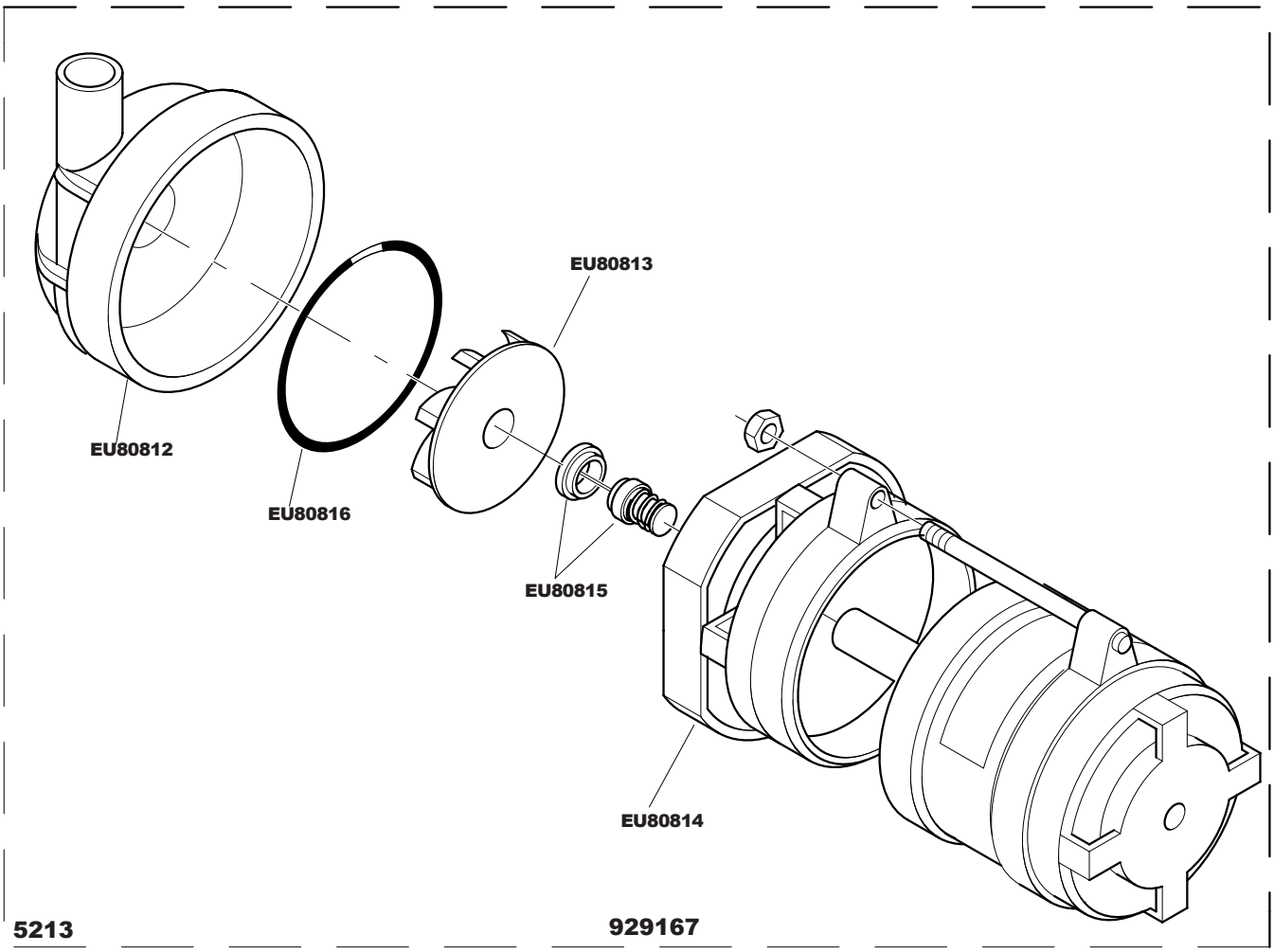
EU80813
EU80812
EU80816
EU80815
EU80814
5213
929167