DESPIECE TECNICO / SPARE PARTS BOM

Marmitas a vapor
Steam boling pans
Marmites à vapeur
Dampf -Kochkessel
Pentole a vapore
Marmitas a vapor

GAMA 700 RANGE

Modelos / Models:

MV7-10 BM

Junio 2008 June

Revisado Mayo 2014 May Revised

FAGOR

FAGOR INDUSTRIAL

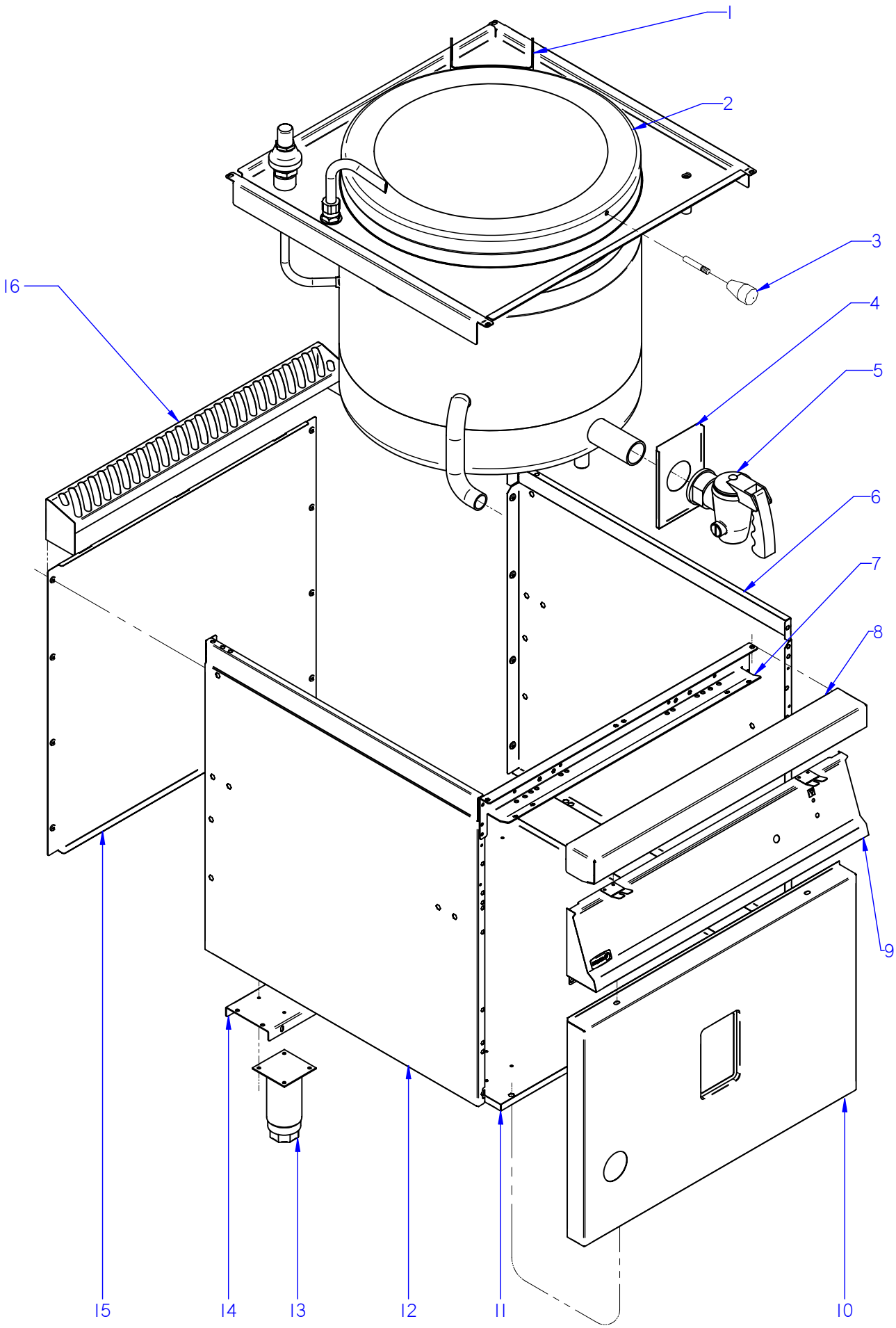

ITEM MARCADO EN COLOR = REPUESTO RECOMENDADO
COLOURED ITEM = RECOMMENDED SPARE PART

N plano	Firma	Fecha	Aparato	MUEBLE	Lamina	
C-2087		2008-06	MARMITA MV7-10 BM		1	Fagor Industrial S.Coop. FAGOR Oñate

MOD.	MARMITAS	ZONA	MUEBLE	PLANO	C-2087

ITEM	CODIGO	DENOMINACION	TEXTO	MV7-10 BM							
1	S316107000	BISAGRA G-700	HINGE G-700	1							
2	S596102000	CUBA+TAPA G MV-710 BMQ F316L	TUB+COVER G MV-710 BMQ F31	1							
	S596106000	CUBA MV7-10BM C/PERNOS	TUB MV7-10BM WITH BOLTS	1							
	S316104000	TAPA COMPLETA	COMPLETE COVER	1							
	Q012032000	TORNILLO EXAGONAL M5X15 A304	HEXAGONAL BOLT M5x15 A304	2							
3	S116122000	MANDO POMO	CONTROL KNOB	1							
	S316113000	ASA DE TAPA	COVER HANDLE	1							
	Q012042000	TORNILLO EXAGONAL M6X15 A304	HEXAGONAL BOLT M6x15 A304	1							
4	S312611000	CUBIERTA GRIFO	TAP COVER	1							
	S112105000	MUELLE SOPORTE CUBI. 07003	CUBI. SUPPORT SPRING 07003	1							
5	S312112000	GRIFO VACIADO 1 1/2"	DRAINAGE TAP 1 1/2"	1							ELIMINADO 1.10.09
5	S532106000	GRIFO VACIADO 1/2"	DRAINAGE TAP 1/2"	1							INTRODUCIDO 1.10.09
6	U912802000	PANEL LATERAL DERECHO G700	RIGHT SIDE PANEL G700	1							
	Q221343000	REMACHE EXAGONAL M6	HEXAGONAL RIVET M6	4							
	Q221342000	REMACHE EXAGONAL M5	HEXAGONAL RIVET M5	2							
	Q012042000	TORNILLO EXAGONAL M6X15 A.304	HEXAGONAL BOLT M6X15 A.304	4							
	Q302022000	ARANDELA 16X6X1.2 A.304	WASHER 16X6X1.2 A.304	4							
	Q262040000	ARANDELA GROW. A6 A.304	WASHER GROW. A6 A.304	4							
7	H602603000	ESCUADRA AMARRE ANTER. 1 M	FRONT FASTENING BRACKET 1	1							
	Q221342000	REMACHE EXAGONAL M5	HEXAGONAL RIVET M5	5							
	Q012031000	TORNILLO EXAGONAL M5X10 A304	HEXAGONAL BOLT M5x10 A304	6							
	Q302022000	ARANDELA 16X6X1.2 A.304	WASHER 16X6X1.2 A.304	6							
8	H125409000	ANTERIOR MESA 1 M G-700	FRONT BENCH 1M G-700	1							
	Q152004000	TORNIL. APLASTADO M5X13 A 304	FLAT HEADED SCREW M5x13 A 3	2							
9	S592802000	PORTAMANDOS MV-710 BM	CONTROL HOLDER MV-710 BM	1							
S/Nº	S512802000	SERIGRAFIA	SILKSCREEN	1							INTRODUCIDO 1.09.08
	Q152004000	TORNIL. APLASTADO M5X13 A 304	FLAT HEADED SCREW M5x13 A 3	2							
	Q221343000	REMACHE EXAGONAL M6	HEXAGONAL RIVET M6	2							
	U912805000	ESCUDO FAGOR G700	FAGOR EMBLEM G700	1							
	Q221023000	CLIP SUJECIÓN RÁPIDA Ø5	RAPID CONNECT CLIP Ø5	2							

MOD.	MARMITAS	ZONA	MUEBLE	PLANO	C-2087

ITEM	CODIGO	DENOMINACION	TEXTO	MV7-10 BM							
10	S592803000	PANEL FRONTAL MV-710 BM Q	FRONT PANEL MV-710 BM Q	1							
	Q012042000	TORNILLO EXAGONAL M6X15 A.304	HEXAGONAL BOLT M6X15 A.304	2							
	Q302022000	ARANDELA 16X6X1.2 A.304	WASHER 16X6X1.2 A.304	2							
	Q262040000	ARANDELA GROW. A6 A.304	WASHER GROW. A6 A.304	2							
11	S592601000	BASE INFERIOR MV-710 BM	LOWER BASE MV-710 BM	1							
	Q221343000	REMACHE EXAGONAL M6	HEXAGONAL RIVET M6	2							
12	U912801000	PANEL LATERAL IZDO. G700	LEFT SIDE PANEL G700	1							
	Q221343000	REMACHE EXAGONAL M6	HEXAGONAL RIVET M6	4							
	Q221342000	REMACHE EXAGONAL M5	HEXAGONAL RIVET M5	2							
	Q012042000	TORNILLO EXAGONAL M6X15 A.304	HEXAGONAL BOLT M6X15 A.304	4							
	Q302022000	ARANDELA 16X6X1.2 A.304	WASHER 16X6X1.2 A.304	4							
	Q262040000	ARANDELA GROW. A6 A.304	WASHER GROW. A6 A.304	4							
13	X260151000	PATA REGULABLE	ADJUSTABLE LEG	4							
	Q411304000	REMACHE AVIBULB Ø 4,8	AVIBULB RIVET Ø 4.8	16							
14	S532604000	LISTON SOPORTE PATAS	LEG SUPPORT STRIP	2							
	Q221343000	REMACHE EXAGONAL M6	HEXAGONAL RIVET M6	2							
15	S562805000	PANEL POSTERIOR G750	REAR PANEL G750	1							
	Q419005000	REMACHE 4X8 ALMG3 / ALUMINIO	RIVET 4X8 ALMG3 / ALUMINIUM	8							
16	S565401000	EMBELLECEDOR POSTERIOR 1M	REAR TRIM 1M	1							

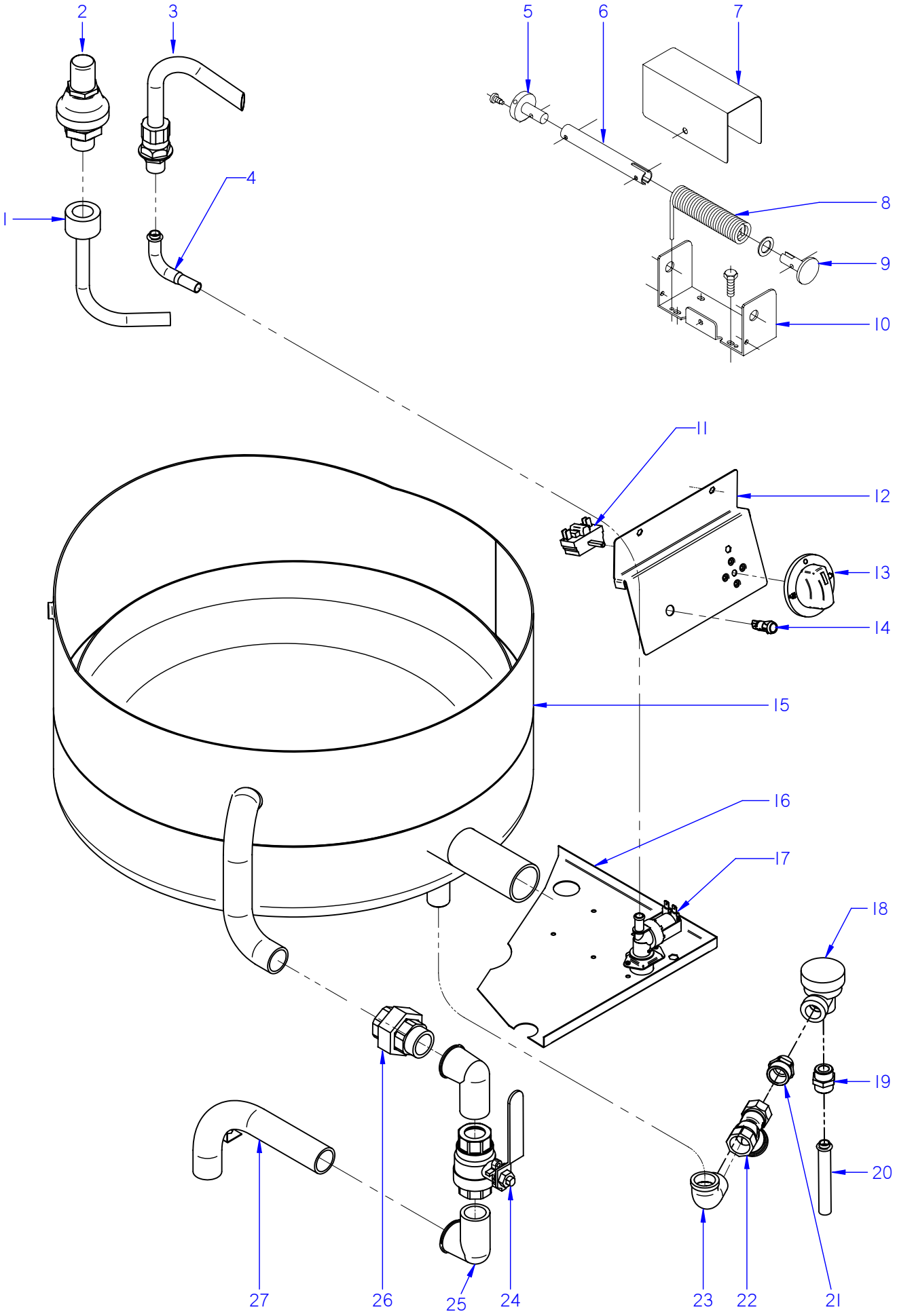

ITEM MARCADO EN COLOR = REPUESTO RECOMENDADO
COLOURED ITEM = RECOMMENDED SPARE PART

N plano	Firma	Fecha	Aparato	PARTE FUNCIONAL	Lamina	
C-2088		2008-06	MARMITA MV7-10 BM		2	Fagor Industrial S.Coop. FAGOR Oñate

MOD.	MARMITAS	ZONA	PARTE FUNCIONAL	PLANO	C-2088

ITEM	CODIGO	DENOMINACION	TEXTO	MV7-10 BM							NOTAS
1	_____	SOPORTE VÁLVULA SEGURIDAD	SAFETY VALVE SUPPORT	1							
2	S022101000	VALVULA SEGURIDAD 01508004	SAFETY VALVE 01508004	1							
3	S052100000	TUBO LLENADO 01102113	FILLER PIPE 01102113	1							
	Q308002000	ARANDELA DUBO A6 NYLON	WASHER DUBO A6 NYLON	2							
4	S565027000	TUBO ENTRADA TUBO LLENADO	INTAKE PIPE FILLER PIPE	1							
	Q306024000	ARANDELA JUNTA Ø18X12.5X1.5	WASHER SEAL Ø18X12.5X1.5	1							
	3676900000	TUBO GOMA NEGRA Ø 17*10	BLACK RUBBER PIPE 17*10	1							
	Q881308000	ABRAZADERA 8-14L	CLAMP 8-14L	6							
5	S316112000	TAPA AMARRE	LID FASTENING	1							
	Q151317000	TORNILLO EXAGONAL M5X22	HEXAGONAL BOLT M5x22	1							
	Q162030000	TUERCA EXAGONAL M5	HEXAGONAL NUT M5	1							
6	S316109000	EJE DE BISAGRA	HINGE SHAFT	1							
7	S316117000	TAPA DE BISAGRA	HINGE COVER	1							
	Q032031000	TORNILLO ALOMADO M5X10	CURVED SCREW M5X10	1							
8	S316110000	MUELLE BISAGRA 26130	SPRING HINGE 26130	1							
9	S316111000	TAPA CIERRE	LID CLOSURE	1							
	Q151317000	TORNILLO EXAGONAL M5X22	HEXAGONAL BOLT M5x22	1							
	Q162030000	TUERCA EXAGONAL M5	HEXAGONAL NUT M5	1							
10	S316108000	SOPORTE BISAGRA	HINGE SUPPORT	1							
	Q303004000	ARANDELA Ø25X16X1.5	WASHER Ø25X16X1.5	2							
	Q012042000	TORNILLO EXAGONAL M6X15	HEXAGONAL BOLT M6x15	4							
	Q302022000	ARANDELA 16X6X1.2 A.304	WASHER 16X6X1.2 A.304	4							
	Q262040000	ARANDELA GROW. A6 A.304	WASHER GROW. A6 A.304	4							
	Q162040000	TUERCA EXAGONAL M6	HEXAGONAL NUT M6	4							
	Q300060000	ARANDELA 18X10X2	WASHER 18X10X2	4							
11	T343008000	CONMUTADOR HGC	HGC SWITCH	1							
12	S562616000	PROTECT. CONMUTADOR-PILOTO	PILOT- SWITCH PROTECT.	1							
	Q221342000	REMACHE EXAGONAL M5	HEXAGONAL RIVET M5	3							
	Q152004000	TORNIL. APLASTADO M5X13 A 304	FLAT HEADED SCREW M5x13 A 3	3							
13	H212103000	BOTON DE MANDO Ø6 ENT. AGUA	CONTROL BUTTON Ø6 ENT. WAT	1							

MOD.	MARMITAS	ZONA	PARTE FUNCIONAL	PLANO	C-2088

ITEM	CODIGO	DENOMINACION	TEXTO	MV7-10 BM							NOTAS
14	X143018000	PILOTO AMBAR SARTEN	FRYING PAM AMBER PILOT	1							ELIMINADO 01.02.13
14	12024669	PILOTO AMBAR Ø18	AMBER PILOT Ø18	1							INTRODUCIDO 01.02.13
15	_____	CUBA	TUB	1							
16	S592601000	BASE INFERIOR MV-710 BM	LOWER BASE MV-710 BM	1							
17	Z701135000	ELECTROVALV. 220V COD.255.208	SOLENOID VALVE. 220V COD.25	1							
	Z601156000	REGULADOR 8L RO. 254.034	REGULATOR 8L RED 254.034	1							
	Q032021000	TORNILLO ALOMADO M4X10	CURVED SCREW M4X10	2							
18	S502102000	GRIFO CONDENSAC. BPT13AX 1/2	CONDENS. TAP BPT13AX 1/2	1							
19	S205023000	MANGUITO DOBLE 1/2	DOUBLE SLEEVE 1/2	1							
20	S045013000	TUBO EMPALME	CONNECTION PIPE	1							
21	S502106000	MANGUITO DOBLE 3/4"- 1/2"	DOUBLE SLEEVE 3/4"- 1/2"	1							ELIMINADO 22,10,12
21	12046984	MANGUITO DOBLE 1/2"-3/4"	DOUBLE SLEEVE 1/2"-3/4"	1							INTRODUCIDO 22,10,12
22	Z102308000	FILTRO 3/4	FILTER 3/4"	1							
23	Z718421000	CODO M-H 3/4" LATON	L-BEND M-H 3/4" BRASS	1							
24	S502103000	VALVULA ESFERA PASO TOTAL	SPHERICAL VALVE TOTAL PASS	1							
25	S502105000	CODO MACHO-HEMBRA 1"	MALE-FEMALE L-BEND 1"	2							
26	S502104000	RACOR EMPALME DE 1	CONNECTION 1	1							
27	S525002000	CONDUCCION ENTRADA VAPOR	STEAM INPUT PIPE	1							ELIMINADO 30.06.09
27	S525006000	CONDUCCION ENTRADA VAPOR	STEAM INPUT PIPE	1							INTRODUCIDO 30.06.09
	Q221343000	REMACHE EXAGONAL M6	HEXAGONAL RIVET M6	1							
	Q012042000	TORNILLO EXAGONAL M6X15	HEXAGONAL BOLT M6x15	1							
	Q262040000	ARANDELA GROW. A6 A.304	WASHER GROW. A6 A.304	1							
	Q302022000	ARANDELA 16X6X1.2 A.304	WASHER 16X6X1.2 A.304	1							

MOD.	MARMITAS	ZONA	VARIOS	PLANO	

ITEM	CODIGO	DENOMINACION	TEXTO	MV7-10 BM							
	S246501000	FOLLETO DE INSTRUC. MV7-10 BM	INSTRUCTION LEAFLET MV7-10 B	1							
	S593002000	ESQUEMA TEORICO ADHESIVO	THEOR. DIAGRAM LABEL	1							PLANO HB-80044
	S593003000	CABLEADO MARMITA MV7-10 BM	PAN WIRING MV7-10 BM	1							

MOD.	MARMITAS	ZONA	REPUESTOS RECOMENDADOS RECOMMENDED SPARE PART	PLANO	

ITEM	CODIGO	DENOMINACION	TEXTO	MV7-10 BM							
5	S532106000	GRIFO VACIADO 1/2"	DRAINAGE TAP 1/2"	1							C-2087
2	S022101000	VALVULA SEGURIDAD 01508004	SAFETY VALVE 01508004	1							C-2088
8	S316110000	MUELLE BISAGRA 26130	SPRING HINGE 26130	1							C-2088
11	T343008000	CONMUTADOR HGC	HGC SWITCH	1							C-2088
14	12024669	PILOTO AMBAR Ø18	AMBER PILOT Ø18	1							C-2088
17	Z701135000	ELECTROVALV. 220V COD.255.208	SOLENOID VALVE. 220V COD.25	1							C-2088
18	S502102000	GRIFO CONDENSAC. BPT13AX 1/2	CONDENS. TAP BPT13AX 1/2	1							C-2088
24	S502103000	VALVULA ESFERA PASO TOTAL	SPHERICAL VALVE TOTAL PASS	1							C-2088

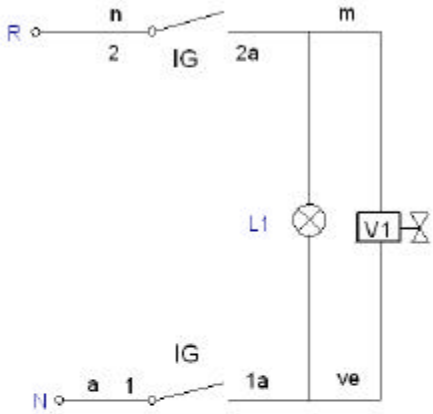

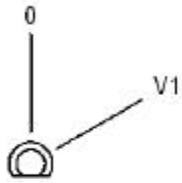

IG	1 1a	2 2a
0		
V1	X	X

a=azul-blue
n=negro-black-noir
m=marrón-brown-marron
ve=verde-green-vert

IG = Interruptor general
L1 = Lampara funcionamiento
V1 = Valvula Agua Caliente

S593002000

-	Eskema teorikoa: MV7-10 BM	-	-	S593002000	-
Zk./Nº	Pieza	Cant.	Materiala/Material	Klas. zk./Nº Clas.	Gainazal akabera/Tratamiento
Zk./Nº	Aldaketa/Modificaciones		Nork proposatua/Propuesta de	Data/Fecha	Perdoi erokorrak Tolerancias generales < 5 ± 0.2 / 50 ÷ 100 ± 0.8 5 ÷ 25 ± 0.4 / >100± 1 25 ÷ 50 ± 0.6 / ∝ ± 1
-	-		-	-	
-	-		-	-	
-	-		-	-	
-	-		-	-	
-	-		-	-	

	Sinadura/Firma	Data/Fecha
Marraztua/Dibujado	ecarrascal	2007-12-11
Proiektatua/Proyectado	ecarrascal	2007-12-11
Egiaztatua/Comprobado	[illegible]	2007-12-11

FAGOR
Fagor Industrial/Koop.Elk, Mugatua

Gainazal perdoia
Mecanizado superficial
—

Eskala/Escala
-

MARMITAK

Plano Zk./Plano Nº
HB-80044

- Zk. ord. du
- Zk gaibk ord.

Plano hau ezin daiteke erabili, ez berriztatu, gure baimenik gabe.

Simb/LENG		ESPAÑOL	ENGLISH	FRANÇAIS	DEUTSCH	ITALIANO
C1, C2	=	Contactor Calentamiento	Contacteur Chauffe	Heating Contactor	Heizschütz	Contatore Riscaldamento
CN	=	Control de Nivel de agua	Control of water Level	Commande de niveau d'eau	Steuerung des Wasserspiegeles	Controllo del livello d'acqua
E	=	Generador de Chispa	Spark generator	Générateur d'étincelle	Funkengenerator	Generatore della scintilla
IB	=	Micro tope bajada	Microswitch of lowered Limit	Microcontact de la limite abaissée	Mikroschalter der gesenkten Begrenzung	Microinterruttore del limite abbassato
IG	=	Interruptor general	General switch	Commutateur général	Allgemeiner Schalter	Interruttore generale
IGV	=	Interruptor electrovalvulas de agua	Switch electrovalvula water	Commutez l'eau d'electrovalvula	Schalten Sie electrovalvula Wasser	Commuti l'acqua di electrovalvula
IE	=	Pulsador de Encendido	Ignition Switch	Commutateur d'allumage	Zündung-Schalter	Interruttore di accensione
IMB	=	Pulsador bajada	lowered switch	commutateur abaissé	gesenkter Schalter	interruttore abbassato
IMS	=	Pulsador subida	Raised switch	Commutateur augmenté	Angehobener Schalter	Interruttore sollevato
IP	=	Micro seguridad	security microswitch	microcontact de sécurité	Sicherheitsmikroschalter	microinterruttore di sicurezza
IS	=	Micro tope subida	Microswitch of rise Limit	Microcontact de la limite d'élévation	Mikroschalter der Aufstieg Begrenzung	Microinterruttore del limite di aumento
L1	=	Lámpara marcha	Operation Light	Lumière d'opération	Betriebs-Licht	Luce di funzionamento
L2	=	Lámpara calentamiento	Heating Light	Lumière de chauffage	Heizungs-Licht	Luce del riscaldamento
M	=	Motor de elevacion	Motor of elevation	Moteur d'altitude	Motor des Aufzugs	Motore dell'altezza
P	=	Presostato de Camara	Water Level Switch	Commutateur de niveau d'eau	Wasserspiegel-Schalter	Interruttore del livello d'acqua
PR	=	Puente rectificador	Electrical bridge rectifier	Pont redresseur électrique	Elektrischer Brückengleichrichter	Raddrizzatore a ponte elettrico
R	=	Resistencia Calentamiento.	Résistance Chauffe	Heating Resistors	Widerstand Aufheizung	Resistenza Riscaldamento
RE	=	Regulador Energia	Regulator of Energy	Régulateur d'énergie	Regler von Energie	Regolatore di energia
T	=	Termostato	Thermostat	Thermostat	Thermostat	Termostato
TRF	=	Transformador	Transformer	Transformateur	Transformator	Trasformatore
TS	=	Termostato de seguridad	Security Thermostat	Thermostat de sécurité	Sicherheits-Thermostat	Termostato di sicurezza
TRP	=	Termopar	Thermocouple	Thermocouple	Thermoelement	Termocoppia
VG1,VG2	=	ElectroVálvula gas	Electrical gas valve	Clapet à gaz électrique	Elektrisches Gichtventil	Valvola a gas elettrica
V1	=	Valvula Agua CALIENTE	ElectroValve of Hot Water	Électrovalve d'eau chaude	Elektroventil des Heißwassers	Elettrovalvola di acqua calda
V2	=	Valvula Agua FRIA	ElectroValve of cold Water	Électrovalve d'eau froide	Elektroventil des kalten Wassers	Elettrovalvola di acqua fredda
V3	=	Valvula Agua Caldera	electrovalve of water boiler	électrovalve de chauffe-eau	Elektroventil des Warmwasserboilers	elettrovalvola del reattore ad acqua
	=	**COLORES**	**COLOUR**	**COULEURS**	**FARBEN**	**COLORE**
a	=	Azul	Blue	Bleu	Blau	Blu
am	=	Amarillo	Yellow	Jaune	Gelb	Giallo
am/ve	=	Amarillo/verde	Yellow / green	Jaune / vert	Gelb/grün	Giallo/verde
b	=	Blanco	White	Blanc	Weiß	Bianco
g	=	Gris	Grey	Gris	Grau	Grigio
m	=	Marrón	Brown	Marron	Braun	Marrone
n	=	Negro	Black	Noir	Schwarz	Nero
na	=	Naranja	Orange	Orange	Orange	Arancio
r	=	Rojo	Red	Rouge	Rot	Rosso
rs	=	Rosa	Pink	Rose	Rosa	Roseo
ve	=	Verde	Green	Vert	Grün	Verde
vi	=	Violeta	Purple	Violet	Violett	Viola
						X463007000