# *DESPIECES*

# *MESAS MCP-MCN*

FAGOR

FAGOR INDUSTRIAL

***Rev.: Dic-2011***

**RECAMBIOS**
**MESAS**
**MCP/MCN-GN**
**Dic-2011**

FAGOR
FAGOFRI S.A.

| Nº | CÓDIGO | DESCRIPCIÓN | MCP-135-GN | MCP-180-GN | MCP-225-GN | MCP-270-GN | MCP-147-R/GN | MCP-192-R/GN | MCP-237-R/GN | MCN-135-GN | MCN-180-GN | MCN-270-GN |
|---|---|---|---|---|---|---|---|---|---|---|---|---|
| | | MODELOS | | | | | | | | | | |
| 1 | 6003010326 | DESAG COMPL 3/4 GRIS+TUERCA | 1 | 1 | 1 | 1 | 1 | 1 | 1 | 1 | 1 | 1 |
| 2 | 6003010262 | TAPON DESAGÜE DE 3/4 CIEGO | 1 | 1 | 1 | 1 | 1 | 1 | 1 | 1 | 1 | 1 |
| 3 | 6003010327 | JUNTA GOMA DESAGÜE 3/4 | 1 | 1 | 1 | 1 | 1 | 1 | 1 | 1 | 1 | 1 |
| 4 | M181010505 | ENCIM.MCP-135 | 1 | | | | | | | 1 | | |
| 4 | M181010471 | ENCIM.MCP-180 | | 1 | | | | | | | 1 | |
| 4 | M181010503 | ENCIM.MCP-225 | | | 1 | | | | | | | |
| 4 | M181010519 | ENCIM.MCP-270 | | | | 1 | | | | | | 1 |
| 4 | M181010593 | ENCIM.MCP-147-R | | | | | 1 | | | | | |
| 4 | M181010507 | ENCIM.MCP-192-R | | | | | | 1 | | | | |
| 4 | M181010595 | ENCIM.MCP-237-R | | | | | | | 1 | | | |
| 9 | 6007050017 | PATA REGULAB ARM GASTRO | 4 | 4 | 6 | 6 | 4 | 6 | 6 | 4 | 4 | 6 |
| 10 | M169010158 | PUERTA MFP/MFN FAGOR CONCEPT | 2 | 3 | 4 | 5 | 3 | 4 | 5 | 2 | 3 | 5 |
| 11 | 6045010119 | BURLETE PUERTA MFP | 4 | 6 | 8 | 10 | 6 | 8 | 10 | 4 | 6 | 10 |
| 12 | 6003010136 | CAJA ALOJAMIENTO MUELLE GRIS | 4 | 6 | 8 | 10 | 6 | 8 | 10 | 4 | 6 | 10 |
| 13 | 6033010100 | BIS.TRS1D DOBL MUELLE DV-2608 | 4 | 6 | 8 | 10 | 6 | 8 | 10 | 4 | 6 | 10 |
| 14 | 6033010129 | SOP.BISAG.INF.IZD. | 2 | 3 | 4 | 5 | 3 | 4 | 5 | 2 | 3 | 5 |
| 15 | 6033090104 | EJE ROSCA EXT.30X10INOX MESAS | 6 | 8 | 10 | 12 | 8 | 10 | 12 | 6 | 8 | 12 |
| 16 | 6025130045 | TUERC.RAPIDA TRT M6-2 | 6 | 8 | 10 | 12 | 8 | 10 | 12 | 6 | 8 | 12 |
| 17 | M109050552 | SOPOR.SUP.PUERTAS MFP-135 | 1 | | | | | | | 1 | | |
| 17 | M109050242 | SOP.SUP.PUERTAS MFP-180 | | 1 | | | | | | | 1 | |
| 17 | M109050555 | SOP.SUP.PUERT. MFP-225 | | | 1 | | | | | | | |
| 17 | M109050565 | SOP.SUP.PUERTAS MFP-270 | | | | 1 | | | | | | 1 |
| 17 | M109050560 | SOP.SUP.PUERT.MFP-147-R | | | | | 1 | | | | | |
| 17 | M109050562 | SOP.SUP.PUERT.MFP-192-R | | | | | | 1 | | | | |
| 17 | M109050596 | SOP.SUPER.PUERTAS MFP-237-R | | | | | | | 1 | | | |
| 18 | M109050698 | SOP.SUP.PUERTAS MFP-135 GI | 1 | | | | | | | 1 | | |
| 18 | M109050700 | SOP.SUP.PUERTAS MFP-180-GI | | 1 | | | | | | | 1 | |
| 18 | M109050702 | SOP.SUP.PUERTAS MFP-225 GI | | | 1 | | | | | | | |
| 18 | M109050704 | SOP.SUP.PUERTAS MFP-270 GI | | | | 1 | | | | | | 1 |
| 18 | M109050701 | SOP.SUP.PUERTAS MFP-147-R GI | | | | | 1 | | | | | |
| 18 | M109050703 | SOP.SUP.PUERTAS MFP-192-R GI | | | | | | 1 | | | | |
| 18 | M109050705 | SOP.SUP.PUERTAS MFP-237-R GI | | | | | | | 1 | | | |
| 20 | M177010185 | CHAP.CUAD.MANDOS CONCEPT | 1 | 1 | 1 | 1 | | | | 1 | 1 | 1 |
| 20 | M109012111 | CUADRO MANDOS MSP-R | | | | | 1 | 1 | 1 | | | |
| 21 | M109050532 | PROTECC.INST.ELECT.FAGOR | 1 | 1 | 1 | 1 | | | | 1 | 1 | 1 |
| 22 | 6033090090 | SOPORTE ZAMAK GIRO REJILLA | 2 | 2 | 2 | 2 | | | | 2 | 2 | 2 |
| 24 | 6023010553 | PEG.CUAD.FAGOR CONCEPT | 1 | 1 | 1 | 1 | | | | 1 | 1 | 1 |
| 24 | 6023010555 | PEG.CUADR.REMOT FAGOR CONCEPT | | | | | 1 | 1 | 1 | | | |
| 25 | 6021130065 | INT.BIP.O/I ROJO/NEGRO | 1 | 1 | 1 | 1 | 1 | 1 | 1 | 1 | 1 | 1 |
| 26 | A177090018 | CONJ.TERMOSTATO REF.+1SONDA | 1 | 1 | 1 | 1 | 1 | 1 | 1 | | | |
| 26 | A177090020 | CONJ.TERMOSTATO CONG.+2SONDA | | | | | | | | 1 | 1 | 1 |
| 27 | 6021130067 | PILOTO RECTAN.ROJO LUM.FAGOR | | | | | 1 | 1 | 1 | | | |
| 28 | M177010233 | CH.REJ.CUAD TRAS.FAGOR | 1 | 1 | 1 | 1 | | | | 1 | 1 | 1 |

**RECAMBIOS**
**MESAS**
**MCP/MCN-GN**
**Dic-2011**

FAGOR
FAGOFRI S.A.

| Nº | CÓDIGO | DESCRIPCIÓN | MCP-135-GN | MCP-180-GN | MCP-225-GN | MCP-270-GN | MCP-147-R/GN | MCP-192-R/GN | MCP-237-R/GN | MCN-135-GN | MCN-180-GN | MCN-270-GN |
|---|---|---|---|---|---|---|---|---|---|---|---|---|
| | | MODELOS | | | | | | | | | | |
| 28 | M109012124 | FRENTE TRASERO REMOTO MCP | | | | | 1 | 1 | 1 | | | |
| 30 | 6021010004 | COMPR.FR-7,5-G R134A | 1 | | | | | | | | | |
| 30 | 6021010007 | COMPR.FR-8.5-G R134A | | 1 | | | | | | | | |
| 30 | 6021010154 | COMP.NEK6210Z EMBRACO | | | 1 | 1 | | | | | | |
| 30 | 6021010001 | COMPR.SC-12-CL R404A | | | | | | | | 1 | | |
| 30 | 6021010160 | COMPR.NEK-2168-GK 220V50HZ | | | | | | | | | 1 | |
| 30 | 6021010006 | COMPR.J-2192-GK R404A ASPERA | | | | | | | | | | 1 |
| 31 | 6029020002 | CONDENSADOR 9x2 | 1 | 1 | | | | | | | | |
| 31 | 6029020003 | CONDENSADOR 9x3 FAGC0021 | | | 1 | 1 | | | | | | |
| 31 | 6029020013 | CONDENSADOR 10X4 NEUTRO | | | | | | | | 1 | | |
| 31 | 6029020005 | CONDENSADOR 10x4 TECHO | | | | | | | | | 1 | |
| 31 | 6029020019 | CONDENSADOR 20X4 BAFLE | | | | | | | | | | 1 |
| 32 | 6021050002 | VENTILADOR 10W PATA PALA 220V | 1 | 1 | 1 | 1 | | | | 1 | 1 | 2 |
| 33 | 6021310003 | VALVULA OBUS COMPLETA RF.HB-1S | 1 | 1 | 1 | 1 | | | | 1 | 1 | 1 |
| 34 | 6047010003 | FILTRO DESHIDRAT.40GR 1/4X1/4 | 1 | 1 | 1 | 1 | | | | 1 | 1 | 1 |
| 35 | M107010037 | SERP.EV.AUTOM.1/4 PINT.150,200 | 1 | 1 | 1 | 1 | | | | | | |
| 35 | M107010038 | SERP.EV.AUT.5/16 PINT.MSN15020 | | | | | | | | 1 | | |
| 35 | M107010040 | TUB.EV.AUT5/16 MFN PINT.EMBRA | | | | | | | | | 1 | |
| 35 | 6021250073 | RESIST.EVAP.AUT.80W 3MT | | | | | | | | | | 1 |
| 36 | 6003010023 | BANDEJA EVAPORACION AUTOMÁTICA | 1 | 1 | 1 | 1 | | | | 1 | 1 | |
| 36 | M109050521 | BANDEJA EVAP AUT MSN-250/300 | | | | | | | | | | 1 |
| 37 | M109250127 | OMEGA COND.9X2-REJ.MESAS-ARMAR | 1 | 1 | 1 | 1 | | | | 1 | 1 | |
| 40 | M171010108 | UD.EV.MSP150,200,135,180 COMP. | 1 | 1 | | | | | | | | |
| 40 | M171010109 | UD.EV. MSP250,300,225,270 COMP | | | 1 | 1 | | | | | | |
| 40 | M171010113 | UD.EV. MSP-117,102,169-R COMP. | | | | | 1 | | | | | |
| 40 | M171010114 | UD.EV.MFP-192R COMP | | | | | | 1 | | | | |
| 40 | M171010116 | EV.MSP-222,274 | | | | | | | 1 | | | |
| 40 | M171010110 | UD.EV. MSN150,200,135,180 COMP | | | | | | | | 1 | 1 | |
| 40 | M171010075 | UD.EV. MSN/MPN-250,300 | | | | | | | | | | 1 |
| 41 | 6029010151 | BAT.5T4R300A4S PINT.MESAS | 1 | 1 | | | 1 | 1 | | | | |
| 41 | 6029010150 | BAT 6T4R300A4S PINT.MESAS | | | 1 | 1 | | | 1 | | | |
| 41 | 6029010147 | BAT.6T4R300A6S PINTADO.MESAS | | | | | | | | 1 | 1 | |
| 41 | 6029010025 | EV.CONG.FC71B BAJO MSN250 | | | | | | | | | | 1 |
| 42 | M109250148 | SUJ.VENTIL.MSP-150,200 COMPACT | 1 | 1 | 1 | 1 | 1 | 1 | 1 | 1 | 1 | |
| 43 | 6027130004 | REJILLA VENT.D.246 PINTADA | 1 | 1 | 1 | 1 | 1 | 1 | 1 | 1 | 1 | 1 |
| 44 | 6021050066 | VENTIL.EVAPOR.5W S/ARO S/PATAS | 1 | 1 | 1 | 1 | 1 | 1 | 1 | 1 | 1 | |
| 45 | M109250151 | SOP.EVAP.MESAS EVAP.COMPACTO | 1 | 1 | 1 | 1 | 1 | 1 | 1 | 1 | 1 | |
| 46 | M109250150 | CUBRER.BAT.6T4R300A6S EVAP.COM | 1 | 1 | 1 | 1 | 1 | 1 | 1 | 1 | 1 | |
| 47 | 6003010184 | CANALIZAD.AGUA 150 GRIS REFRIG | 1 | 1 | 1 | 1 | 1 | 1 | 1 | | | |
| 47 | 6003010192 | CANALIZ AGUA 150 NEGRO CONG | | | | | | | | 1 | 1 | 1 |
| 50 | 6033050012 | GUIA BAJ GN CENT L=613MM Y PES | 8 | 12 | 16 | 20 | 12 | 16 | 20 | 8 | 12 | 20 |
| 51 | 6027010003 | PARRIL. GN1/1 530x325 | 2 | 3 | 4 | 5 | 3 | 4 | 5 | 2 | 3 | 5 |
| 56 | M109050808 | CREM. MARC. MAGNETICO MSP-MFP | 8 | 12 | 16 | 20 | 12 | 16 | 20 | 8 | 12 | 20 |

**RECAMBIOS**
**MESAS**
**MCP/MCN-GN**
**Dic-2011**

FAGOR
FAGOFRI S.A.

| Nº | CÓDIGO | DESCRIPCIÓN | MCP-135-GN | MCP-180-GN | MCP-225-GN | MCP-270-GN | MCP-147-R/GN | MCP-192-R/GN | MCP-237-R/GN | MCN-135-GN | MCN-180-GN | MCN-270-GN |
|---|---|---|---|---|---|---|---|---|---|---|---|---|
| | | **MODELOS** | | | | | | | | | | |
| 61 | 6021390006 | MANG 3X1X2500 BL. SCHUKO 3T | 1 | 1 | 1 | 1 | 1 | 1 | 1 | | | |
| 61 | 6021390022 | MANG 3X1.5X2500 BL.SCHUKO 3T | | | | | | | | 1 | 1 | 1 |
| 62 | M109050033 | PROT SONDA 175x49 | 1 | 1 | 1 | 1 | 1 | 1 | 1 | 1 | 1 | 1 |
| 70 | 6021010037 | CONDEN.ARRANQUE FR-117U5015 80 mF | 1 | 1 | | | | | | | | |
| 70 | 6021010158 | CONDENSADOR COMP. NEK 6210Z | | | 1 | 1 | | | | | | |
| 70 | 6021010035 | COND.ARRANQ.SC 117U5017 80MF | | | | | | | | 1 | | |
| 70 | 6021010165 | CONDENSAD ARRANQUE NEK-2168-GK | | | | | | | | | 1 | |
| 70 | 6021010038 | COND.ARRA.J2192GK 2252019 98MF | | | | | | | | | | 1 |
| 71 | 6021010045 | RELE ARRANQ COMPR.FR-7.5G 6001 | 1 | | | | | | | | | |
| 71 | 6021010025 | RELE ARRANQUE COMPRESOR FR-8,5G 2 | | 1 | | | | | | | | |
| 71 | 6021010156 | RELE ARRAN. COMP. NEK 6210Z | | | 1 | 1 | | | | | | |
| 71 | 6021010042 | RELE ARRANQ COMPR.SC-12CL 6005 | | | | | | | | 1 | | |
| 71 | 6021010166 | RELE ARRANQUE NEK-2168-GK | | | | | | | | | 1 | |
| 71 | 6021010034 | RELE COMPRESOR ASPERA J2192GK | | | | | | | | | | 1 |
| 80 | 6021250003 | RESIST.MARCO GASTRO-1,20W | | | | | | | | 2 | 2 | 2 |
| 81 | 6021250004 | RESIST.MARCO GASTRO-2, 20 W | | | | | | | | 2 | 4 | 8 |
| 82 | 6021250019 | RESIST.BLIND.FC61-71 350W 1000 | | | | | | | | 1 | 1 | |
| 82 | 6021250021 | RESIST.BLIND.FC61-71 350W 2500 | | | | | | | | | | 1 |
| 83 | 6021250011 | RESIST.BANDEJA DEPART.18W | | | | | | | | 1 | 1 | 1 |
| 90 | M169010100 | PUE MFP/MFN. AP.DCH. | 2 | 3 | 4 | 5 | 3 | 4 | 5 | 2 | 3 | 5 |
| 91 | 6033010130 | SOP.BISAG.INF.DCH. | 2 | 3 | 4 | 5 | 3 | 4 | 5 | 2 | 3 | 5 |

| LISTADO MODIFICACIONES RESPECTO ACTUALIZACION Dic-2011 | | | | | |
|---|---|---|---|---|---|
| Nº | Jun-2011 | | Dic-2011 | | RELACION |
| | CODIGO | DESCRIPCION | CODIGO | DESCRIPCION | |
| 10 | M169010093 | PUERTA MFP/MFN FAGOR 2006 | M169010158 | PUERTA MFP/MFN FAGOR CONCEPT | INTERCAMBIABLE |
| 20 | M177010065 | CHAP.CUAD.MANDOS | M177010185 | CHAP.CUAD.MANDOS CONCEPT | INTERCAMBIABLE |
| 20 | M109010642 | CUADRO MANDOS MSP-R | M109012111 | CUADRO MANDOS MSP-R | INTERCAMBIABLE |
| 24 | 6023010408 | PEG.CUAD.FAGOR REFR.347,5X60 | 6023010553 | PEG.CUAD.FAGOR CONCEPT | NO INTERCAMBIABLE |
| 24 | 6023010418 | PEG.105X220 CUADR.REMOT FAGOR | 6023010555 | PEG.CUADR.REMOT FAGOR CONCEPT | NO INTERCAMBIABLE |
| 25 | 6021130001 | INT.BIP.AMB.O/I CONTAC.REFORZ. | 6021130065 | INT.BIP.O/I ROJO/NEGRO | INTERCAMBIABLE |
| 26 | 6021350115 | TERM.REFR.PYCO1SN50P S/SONDA | A177090018 | CONJ.TERMOSTATO REF.+1SONDA | TERMOST. INTERCAMB. CON SONDA |
| 26 | 6021350117 | TERM.CONG.PYCO1LO51G S/SONDA | A177090020 | CONJ.TERMOSTATO CONG.+2SONDA | TERMOST. INTERCAMB. CON SONDA |
| 27 | 6021130010 | PILOTO RECTAN.AMBAR LUM.FAGOR | 6021130067 | PILOTO RECTAN.ROJO LUM.FAGOR | INTERCAMBIABLE |
| 28 | M177010087 | CH.REJ.CUAD TRASERA | M177010233 | CH.REJ.CUAD TRAS.FAGOR | INTERCAMBIABLE |
| 28 | M109010902 | FRENTE TRASERO REMOTO MCP | M109012124 | FRENTE TRASERO REMOTO MCP | INTERCAMBIABLE |
| 90 | M169010100 | PUE MFP/MFN. AP.DCH. | M169010100 | PUE MFP/MFN. AP.DCH. | INTERCAMBIABLE |

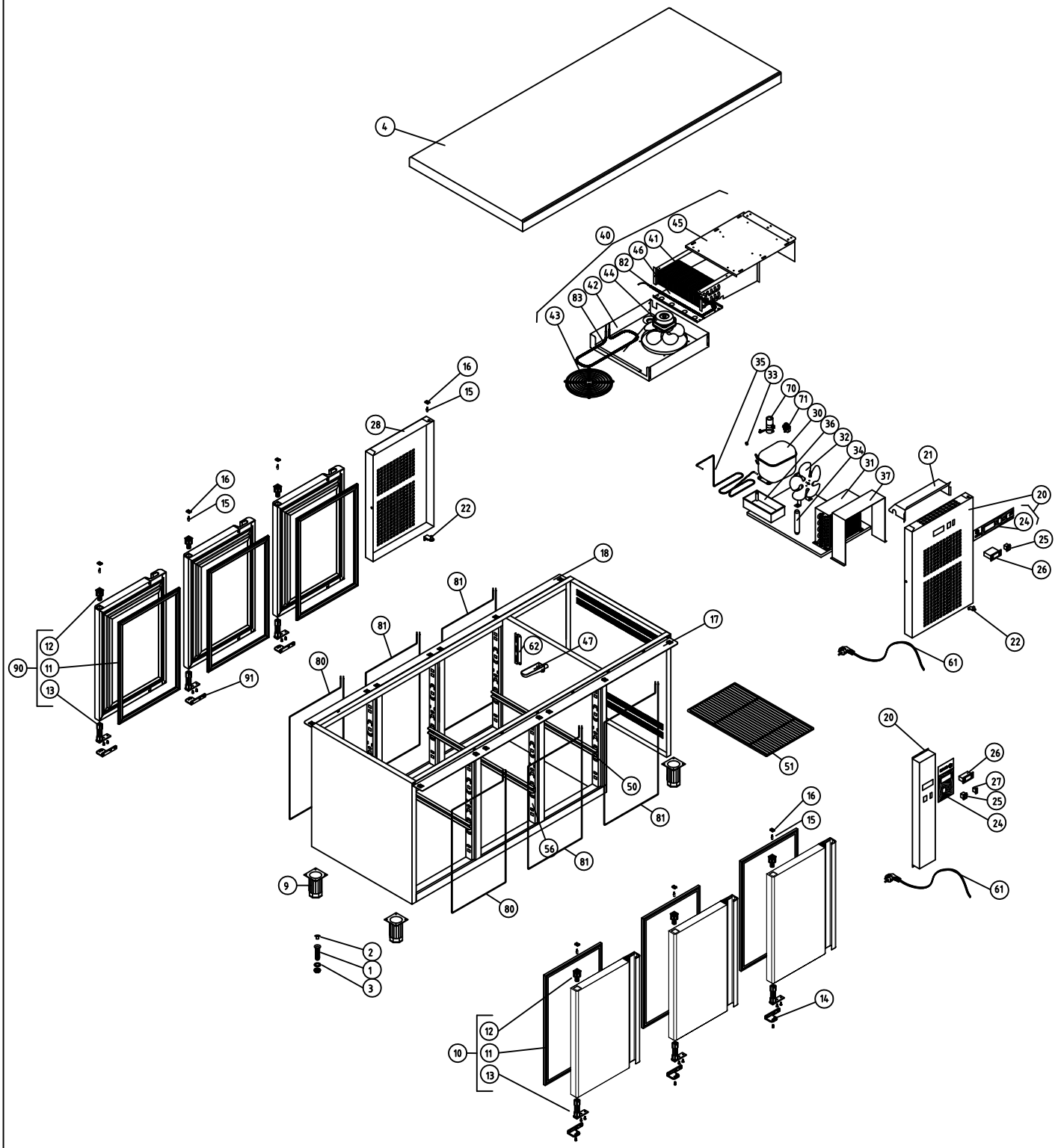


| | | | | |
|---|---|---|---|---|
| M1 MESAS FRÍAS | | | | COD. PIEZA: CÓDIGO |
| COTAS SIN TOLERANCIA DIN 7168-f | | | | SUSTITUYE A: . |
| Material: . | | | | SUSTITUIDO POR: . |
| Acabado: . | | | | |

| ANGULAR | GRADO TOLERANCIA | FINO | MEDIO | GRUESO |
|---|---|---|---|---|
| | HASTA 10 mm | ±1° | | ±1° 30' |
| | MAS DE 10 A 50 mm | ±30' | | ±50' |
| | MAS DE 50 A 120 mm | ±20' | | ±25' |
| | MAS DE 120 A 400 mm | ±10' | | ±15' |
| | MAS DE 400 mm | ±5' | | ±10' |

| LINEAL | GRADO TOLERANCIA | FINO | MEDIO | GRUESO |
|---|---|---|---|---|
| | HASTA 3 mm | ±0,05 | ±0,10 | ±0,15 |
| | MAS DE 3 A 6 mm | ±0,05 | ±0,10 | ±0,20 |
| | MAS DE 6 A 30 mm | ±0,10 | ±0,20 | ±0,50 |
| | MAS DE 30 A 120 mm | ±0,15 | ±0,30 | ±0,80 |
| | MAS DE 120 A 400 mm | ±0,20 | ±0,50 | ±1,20 |
| | MAS DE 400 A 1000 mm | ±0,30 | ±0,80 | ±2,00 |
| | MAS DE 1000 A 2000 mm | ±0,50 | ±1,20 | ±3,00 |

COMÚN A

| MODELO | Ud. | MODELO | Ud. | MODELO | Ud. | MODELO | Ud. | MODELO |
|---|---|---|---|---|---|---|---|---|
| MCP/N-135-GN | 1 | MCP/N-270-GN | 1 | MCP-237-R | 1 | | | |
| MCP/N-180-GN | 1 | MCP-147-R | 1 | | | | | |
| MCP/N-225-GN | 1 | MCP-192-R | 1 | | | | | |

| | | | |
|---|---|---|---|
| A4 | Nombre | Fecha | FAGOR |
| Dibujado | B. MORENO | Dic-2011 | |
| Modificado | . | . | |
| Escala 1:30 | RECAMBIOS MCP / MCN -GN | | Código máquina: CODIGO |