Modello/Type: **60/30 PCE - PCE/P - PCE2/P**

cod./num. 2531364.00

data/date: 20/05/2013

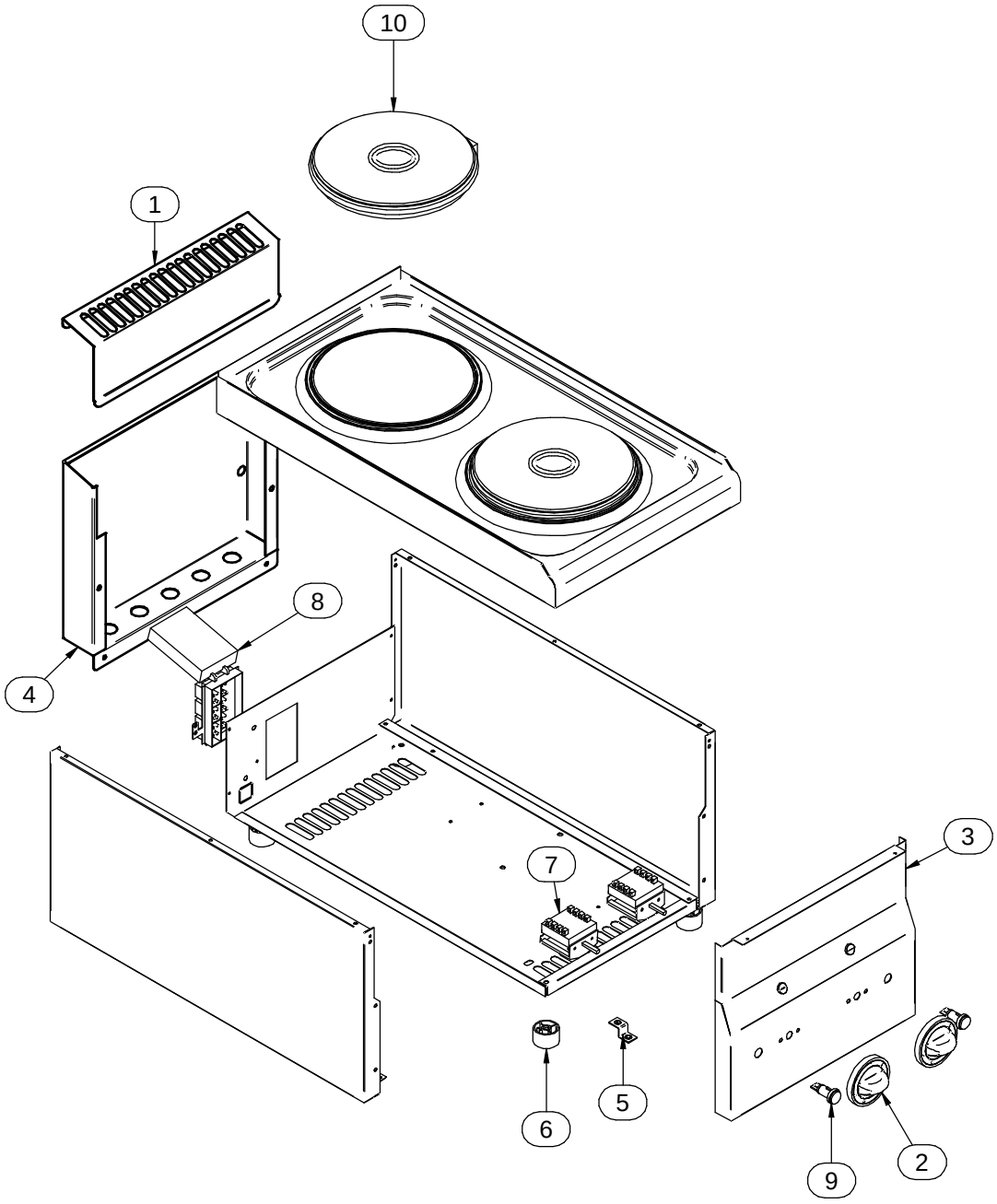

Modello Type:	60/30 PCE				cod. / num.	2531365.00
					data / date:	20/05/2013
POS. ITEM	CODICE CODE	DESCRIZIONE	DESCRIPTION	DENOMINATION	BENENNUNG	NOTE / NOTES
1	611.914.00	ALZATINA	UPSTAND	DOSSERET	AUFKANTUNG	
2	612.002.00	MANOPOLA	KNOB	BOUTON	DREHKNOPF	
3	256.042.00	CRUSCOTTO	CONTROL PANEL	BANDEAU	BEDIENBLENDE	
4	621.751.00	PANNELLO POSTERIORE	BACK PANEL	PANNEAU POSTERIEUR	HINTERBRETT	
5	256.002.00	STAFFA FISSAGGIO CRUSCOTTO	CONTROL PANEL FIXING BRACKET	EQUERRE FIXATION BANDEAU	BEFESTIGUNGSWINKEL BEDIENBLENDE	
6	651.001.00	PIEDINO	FOOT	PIED	STELLFUSS	
7	661.002.00	COMMUTATORE	CHANGE-OVER SWITCH	COMMUTATEUR	UMSCHALTER	
8	663.040.00	MORSETTIERA	TERMINAL BOARD	BORNES	KLEMMENBRETT	
9	663.043.00	SPIA VERDE	GREEN INDICATOR LIGHT	LAMPE TEMOIN VERTE	GRUENE KONTROLLAMPE	
10	665.059.00	PIASTRA ELETTRICA	ELECTRIC PLATE	PLAQUE ELECTRIQUE	ELEKTROKOCHPLATTE	
11						
12						
13						
14						
15						
16						
17						
18						
19						
20						