SIMAG

Electronic modular cuber

SV 210
SV 310

R 404 A VERSION

SPARE PARTS LIST
CATALOGO RICAMBI
CATALOGUE PIÈCES DÉTACHÉES
ERSATZTEILENKATALOG

090090.14 REV. 11/98

PAGE PAGINA PAGE SEITE	TABLE OF CONTENTS	INDICE	TABLE DES MATIERES	INHALTVERZEICHNIS
1	TABLE OF CONTENTS	INDICE	TABLE DES MATIERES	INHALTVERZEICHNIS
2/3	CABINET ASSEMBLY	ASSIEME MOBILE	ENSEMBLE CAROSSERIE	AUSSENWAENDE
4/5	ICE MAKING SYSTEM AND CONTROL BOX	GRUPPO EVAPORATORE E SCATOLA ELETTRICA	GROU EVAPORATEUR ET BOITIER DE COMMANDE	VERDAMPFER UND ANSCHLUSSKASTEN
6/7	CONDENSING UNIT AIR COOLED	UNITA' CONDENSATRICE RAFFR. AD ARIA	UNITÉ DE CONDENSATION REFROID. A AIR	LUFTGEKUEHLTES KÄLTEAGGREGAT
8/9	CONDENSING UNIT WATER COOLED	UNITA' CONDENSATRICE RAFFR. AD ACQUA	UNITÉ DE CONDENSATION REFROID. A EAU	WASSERGEKUEHLTES KÄLTEAGGREGAT
10	COMPRESSOR CHART	LISTA COMPRESSORI	LISTE DES COMPRESSEUR	KOMPRESSORENLISTE
11	ELECTRIC COMPONENT CHART	LISTA COMPONENTI ELETTRICI	LISTE DES COMPOSANTS ELECTRIQUES	ELEKTRISCHER TEILLISTE

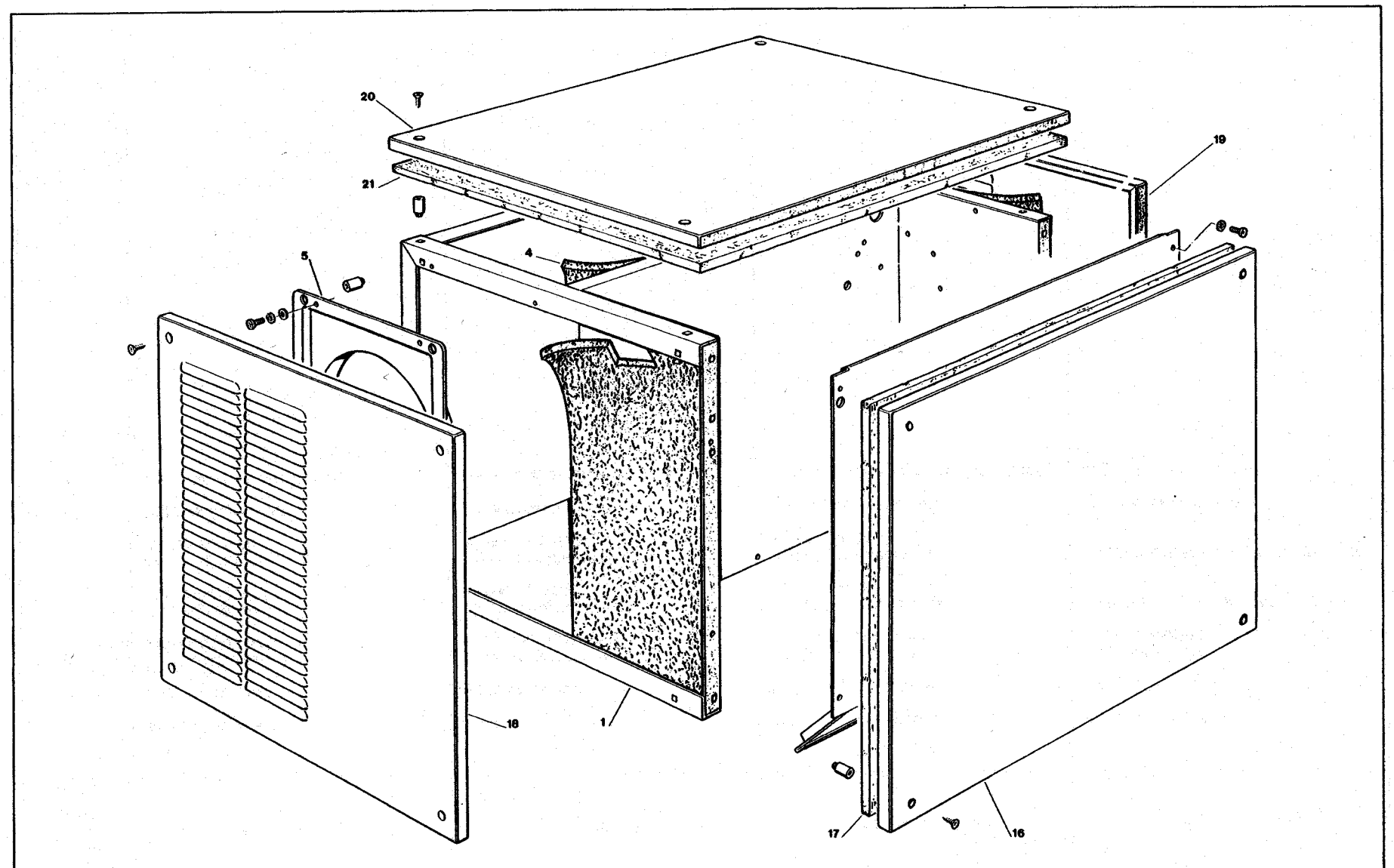
20
21
19
5
4
18
1
17
16

SV 210 - SV 310 - CABINET ASSEMBLY - ASSIEME MOBILE - ENSEMBLE CAROSSERIE - AUSSENWAENDE

ITEM NO POS NO REP. NO REF. NO	PART NO - CODICE REFERENCE - STUECK NR SV 210	 SV 310	DESCRIPTION	DESCRIZIONE	DESIGNATION	BESCHREIBUNG
1	CM 81453000	CM 81453065	UNIT CHASSIS	ASS; TELAIO	ENS. CHASSIS	GEHAEUSETEILE
5	CM 25168773	CM 25168774	SHROUD	CONVOGLIATORE	CONVECTEUR DU CONDENSEUR	ACHAUFEL VERSTEIFUNG BAND
16	CM 25550578	CM 25550579	FRONT PANEL S.S.	PANNELLO FRONTALE ACC. INOX	PANNEAU AVANT ACIER INOX	EDELSTHALVORDERWAND
17	CM 25550576	CM 25550577	INSULATION	ISOLAMENTO	ISOLATION	ISOLIERUNG
18	CM 25330593	CM 25330603	LEFT SIDE PANEL S.S.	PANNELLO LAT. SX ACC. INOX	PANNEAU GAUCHE ACIER INOX	EDELSTHAL LINKSWAND
19	CM 25330591	CM 25330601	RIGHT SIDE PANEL S.S.	PANNELLO LAT. DX ACC. INOX	PANNEAU DROITE ACIER INOX	EDELSTHAL RECHTSWAND
20	CM 25161087	CM 25161087	TOP PANEL S.S.	PANNELLO SUPERIORE ACC. INOX	PANNEAU DESSUS ACIER INOX	EDELSTHAL ABDECKHAUBE
21	CM 25550043	CM 25550043	INSULATION	ISOLAMENTO	ISOLATION	ISOLIERUNG

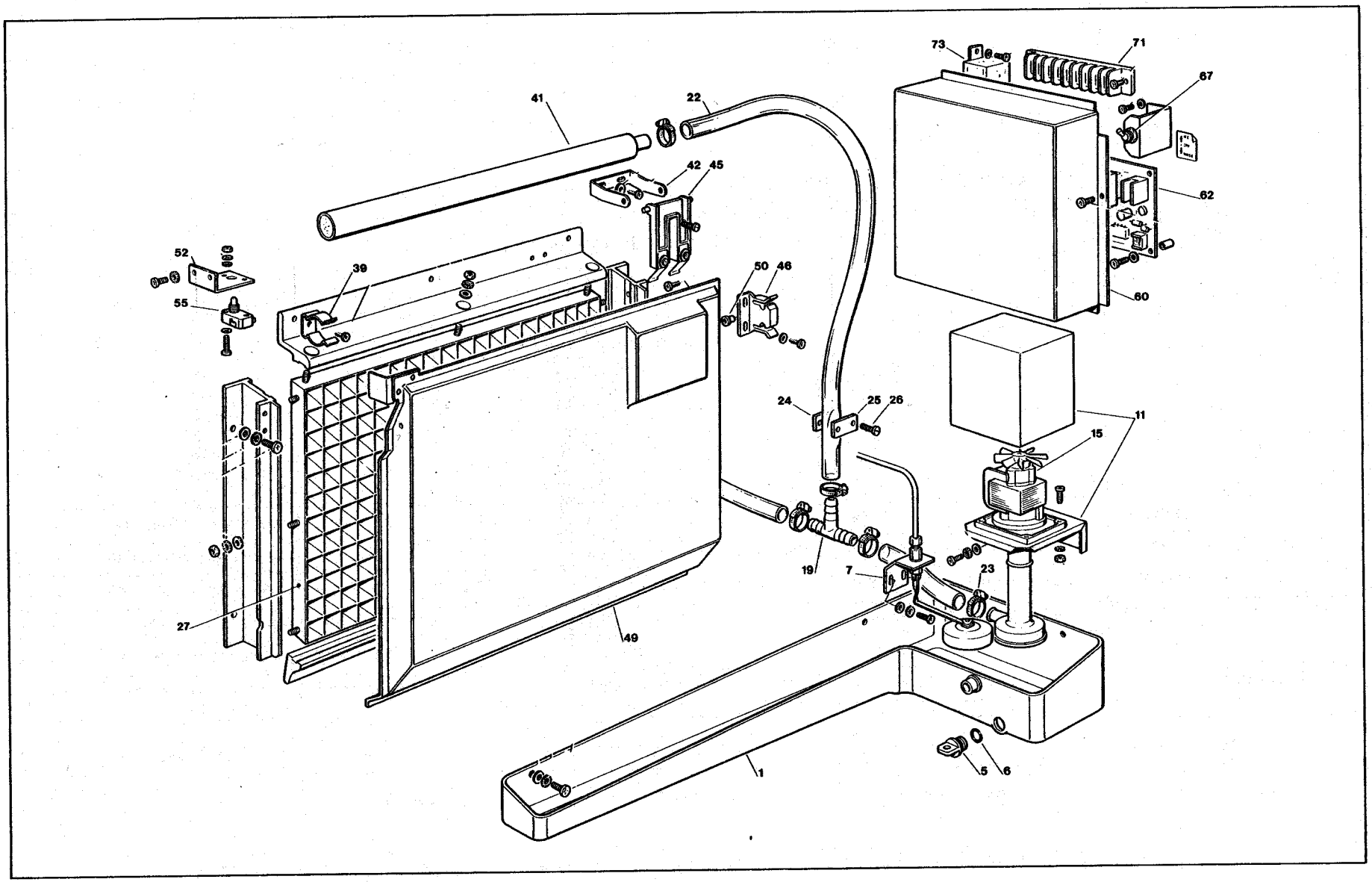
73
71
67
62
60
41
22
42
45
52
39
50
46
55
24
25
26
11
15
19
7
23
27
49
1
5
6

SV 210 - SV 310 - ICE MAKING SYSTEM AND CONTROL BOX - GRUPPO EVAPORATORE E SCATOLA ELETTRICA
GROUP EVAPORATEUR ET BOITIER DE COMMANDE - VERDAMPFER UND ANSCHLUSSKASTEN

ITEM NO POS NO REP. NO REF. NO	PART NO - CODICE REFERENCE - STUECK NR SV 210	SV 310	DESCRIPTION	DESCRIZIONE	DESIGNATION	BESCHREIBUNG
1	CM 81453116	CM 81453116	WATER RESERVOIR	VASCHETTA ACQUA	RÉSERVOIR D'EAU	WASSERBECKEN
5	CM 25730503	CM 25730503	DRAIN PLUG	TAPPO SCARICO	BOUCHON DE VIDANGE	VERSCHLUßSCRAUBE FÜR WASSER BECKEN
6	640087 00	640087 00	O RING	GUARNIZIONE OR	JOINT TORIQUE	O RING
7	02.2217.02	02.2217.02	FLOAT VALVE	GALLEGGIANTE	VANNE A FLOTTEUR	SCHWIMMERVENTIL
11	CM 25161017	CM 25161017	PUMP BRACKET	SUPPORTO POMPA	SUPPORT POMPE	PUMPENTRAEGER
15	793113.09	793113.09	WATER PUMP	POMPA	POMPE A EAU	WASSERPUMPE
19	CM 19612502	CM 19612502	T FITTING	RACCORDO A "T"	RACCORD E TÉ	T-STUECK
22	CM 25790832	CM 25790880	WATER TUBE	TUBO	TUYAU	WASSERSCHLAUCH
24	CM 25570410	CM 25570410	PLATE	PIASTRINA	PLAQUETTE	PLATTE
25	CM 25570411	CM 25570411	PLATE	PIASTRINA	PLAQUETTE	PLATTE
26	CM 19940100	CM 19940100	SCREW	VITE	VIS	SCHRAUBE
27	CM 81453113	CM 81453124	EVAPORATOR ASSY	ASSIEME EVAPORATORE	ENS. EVAPORATEUR	VERDAMPFEREINHEIT
39	CM 25474608	CM 25474608	METAL CLIP	SUPPORTO	SUPPORT	UMKLAMMERN
41	CM 81453009	CM 81453009	WATER DISTRIB. TUBE	BARRA IRRORATRICE	RAMPE D'ARROSAGE	WASSERSPRUEHEINHEIT
42	CM 25725450	CM 25725450	SENSOR DEVICE BRKT	SUPPORTO DISPOSITIVO SENSORI	SUPPORT DISPOSITIF CAPTEUR	EISMEßFÜHLER KLAMMERN
45	CM 81453114	CM 81453114	ICE THICKNESS SENSOR CONTROL DEVICE	ASS. SENSORE CONTROLLO SPESSORE GHIACCIO	ENS. DISPOSITIF CAPTEUR EPAISSEUR GLAÇONS	EISGROSSEMEßFÜHLER
46	CM 25726473	CM 25726473	DEFLECTOR COVER/BRKT	SUPPORTO COPERCHIO/DEFLETTORE	SUPPORT COUVERCLE/DEFLECTEUR	LENKWAND KLAMMERN
49	CM 81453130	CM 81453131	DEFLECTOR/COVER	DEFLETTORE/COPERCHIO	COUVERCLE/DEFLECTEUR	LENKWAND
50	CM 25560133	CM 25560133	PIN	PERNO	PIVOT	STIFT
52	CM 25725454	CM 25725454	BRACKET	SUPPORTO	SUPPORT	ECKIGE KLAMMER
55	CM 19410207	CM 19410207	N.C. MICROSWITCH	N.C. INTERRUTTORE	N.F. MICROINTERRUPTEUR	N.C. MIKRO-SCHALTER
60	CM 25160502	CM 25160502	ELECTR. BOX COVER	COPERCHIO SC. ELETTRICA	COUVERCLE BOITIER ELECTR.	ANSCHLUSSKASTEN GEHAUSE
62	CM 33580043	CM 33580043	ELECTRONIC CONTROL BOARD	SCHEDA ELETTRONICA	CARTE ELECTRONIQUE	STEUEURKARTE
67	CM 33400027	CM 33400027	SWITCH	INTERRUTTORE	INTERRUPTEUR	SCHALTER
71	CM 33489251	CM 33489251	TERMINAL BLOCK	MORSETTIERA	BORNIER	ANSCHLUSSKASTEN
73	630119.00	630119.00	CONTACTOR	TELERUTTORE	CONTACTEUR	MAGNETSCHALTER

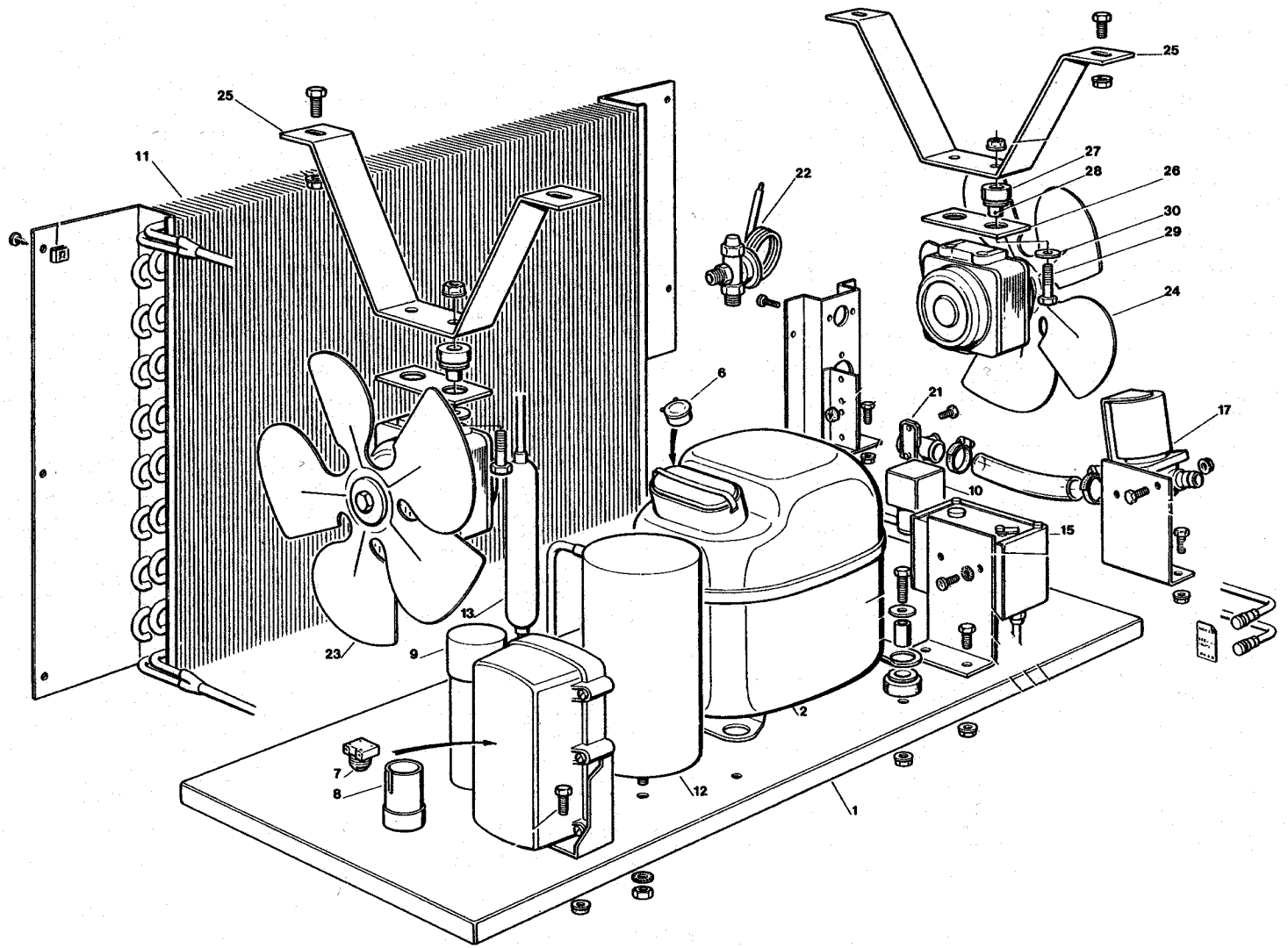
25
11
22
25
27
28
26
30
29
24
6
21
17
10
15
13
23
9
2
7
8
12
1

SV 210 - SV 310 - CONDENSING UNIT-AIR COOLED - UNITA' CONDENSATRICE-RAFFR. ARIA
UNITE DE CONDENSATION-REFROID. PAR AIR - LUFTGEKUEHLTES KÄLTEAGGREGAT

ITEM NO POS NO REP. NO REF. NO	PART NO - CODICE REFERENCE - STUECK NR SV 210	 SV 310	DESCRIPTION	DESCRIZIONE	DESIGNATION	BESCHREIBUNG
1	CM 81453000	CM 81453065	CHASSIS ASSY	ASS. TELAIO	ENS. CHASSIS	GEHAEUSETEILE
2	CM 19165550	CM 19165551	COMPRESSOR ASSY	ASS. COMPRESSORE	ENS. COMPRESSEUR	KOMPRESSOREINHET
6	CM 19560192	–	PROTECTOR	PROTETTORE	PROTECTEUR	SCHUTZVORRICHTUNG
7	CM 19621687	CM 19621687	RELAY	RELE'	RELAIS	RELAIS
8	620167 00	620167 07	START CAPACITOR	CAPACITA' D'AVVIAMENTO	CONDENSAT. DEMARRAGE	STARTKONDENSATOR
9	620167 21	620171 01	RUN CAPACITOR	CAPACITA' DI MARCIA	CONDENSAT. PERMANENT	BETRIEBSKONDENSATOR
10	CM 19863034	CM 19863034	HOT GAS VALVE ASSY	ASS. VALVOLA GAS CALDO	ENS. VANNE GAZ CHAUDS	HEISSGASVENTIL
11	CM 19177507	CM 19177508	CONDENSER	CONDENSATORE	CONDENSEUR	KONDENSATOR
12	CM19635339	CM19635339	LIQUID RECEIVER	RICEVITORE DI LIQUIDO	BOUTEILLE LIQUIDE	FLÜSSIGKEITS SAMMLER
13	CM 19301230	CM 19301230	DRIER	FILTRO	DESHIDRATEUR	TROCKNER
15	CM 19550607	CM 19550607	PRESSURE SWITCH (FAN. CONT.)	PRESSOSTATO (COM. VENT.)	PRESSOSTAT H.P. (CONTR. VENT.)	PRESSOSTAT HOCKDRUCK (LUFTER MOTOR KONTR.)
17	CM 19865525	CM 19865525	WATER DRAIN VALVE	VALVOLA SCARICO ACQUA	VANNE DE VIDANGE D'EAU	WASSERABFLUSSVENTIL
21	CM 25690806	CM 25690806	DRAIN FITTING	RACCORDO SCARICO	RACCORD ÉVACUATION EAU	WASSERABFLUSSNIPPEL
22	CM 19870825	CM 19870826	THERM. EXP. VALVE	VALVOLA ESPANS. TERMOSTATICA	DETENDEUR	EXPANSION VENTIL
23-24	CM 18562058	CM 18562058	FAN MOTOR ASSY	ASS. MOTOVENTILATORE	ENS. MOTOVENTILATEUR	LUFTERMOTOR KOMPL
25	CM 25725455	CM 25725455	BRACKET	SUPPORTO	SUPPORT	TRAEGER
26	CM 25570190	CM 25570190	PLATE	PIASTRINA	PLAQUETTE	PLATTE
27	CM 19031000	CM 19031000	GROMMET/PADS	AMMORTIZZATORE	SILENT BLOCS	GUMMIBUCHSE
28	CM 19060306	CM 19060306	SLEEVE	BUSSOLA	ENTRETOISE	BUCHSE
29	CM 12792099	CM 12792099	SCREW	VITE	VIS	SCHRAUBE
30	CM 12523050	CM 12523050	WASHER	RONDELLA	RONDELLE	SCHEIBE
•	CM19550608		Hi Pressure ctrl (safety)	Pressostato di sicurez.	Pressostat de securité	DRUCKWÄCHTER

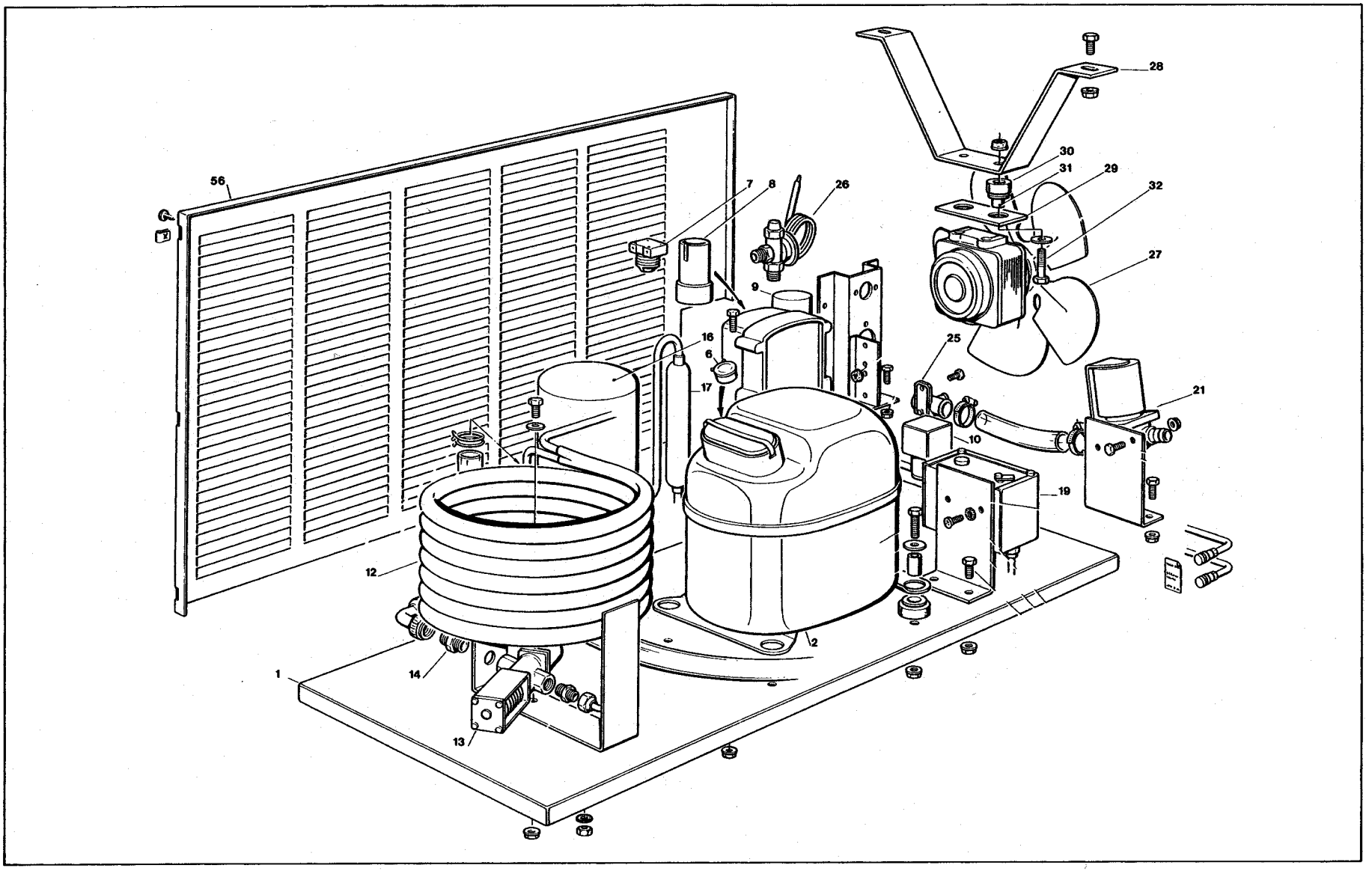
56
7
8
26
28
30
31
29
32
27
9
16
6
17
25
21
10
19
12
2
1
14
13

SV 210 - SV 310 - CONDENSING UNIT-WATER COOLED - UNITA' CONDENSATRICE-RAFFR. AD ACQUA
UNITE DE CONDENSATION-REFROID. PAR EAU - WASSER GEKUHLTS KÄLTEAGGREGAT

ITEM NO POS NO REP. NO REF. NO	PART NO - CODICE REFERENCE - STUECK NR SV 210	 SV 310	DESCRIPTION	DESCRIZIONE	DESIGNATION	BESCHREIBUNG
1	CM 81453000	CM 81453065	CHASSIS ASSY	ASS. TELAIO	ENS. CHASSIS	GEHAEUSETEILE
2	CM 19165550	CM 19165551	COMPRESSOR ASSY	ASS. COMPRESSORE	ENS. COMPRESSEUR	KOMPRESSOREINHET
6	CM 19560192	–	PROTECTOR	PROTETTORE	PROTECTEUR	SCHUTZVORRICHTUNG
7	CM 19621687	CM 19621687	RELAY	RELE'	RELAIS	RELAIS
8	620167 00	620167 07	START CAPACITOR	CAPACITA' D'AVVIAMENTO	CONDENSAT. DEMARRAGE	STARTKONDENSATOR
9	620167 21	620171 01	RUN CAPACITOR	CAPACITA' DI MARCIA	CONDENSAT. PERMANENT	BETRIEBSKONDENSATOR
10	CM 19863034	CM 19863034	HOT GAS VALVE ASSY	ASS. VALVOLA GAS CALDO	ENS. VANNE GAZ CHAUDS	HEISSGASVENTIL
12	CM 81485038	CM 81453098	CONDENSER	CONDENSATORE	CONDENSEUR	KONDENSATOR
13	620111 00	620111 00	WATER REGULATING VALVE	VALVOLA REGOLAZIONE ACQUA	VANNE RÉGULATION EAU	WASSER REGLER VENTIL
14	CM 25631013	CM 25631013	WATER FITTING-IN	RACCORDO IDRAULICO	RACCORD-ARRIVÉE EAU	WASSEREINLAUFSTUECK
16	CM 19635339	CM 19635339	LIQUID RECEIVER	RICEVITORE DI LIQUIDO	BOUTEILLE LIQUIDE	FLUSSIGKEITSSAMMLER
17	CM 19301230	CM 19301230	DRIER	FILTRO	DESHYDRATEUR	TROCKNER
19	CM 19550606	CM 19550606	HIGH PRESSURE CONTROL	PRESSOSTATO DI ALTA	PRESSOSTAT H.P.	HOCKDRUCKPRESSOSTAT
21	CM 19865525	CM 19865525	WATER DRAIN VALVE	VALVOLA SCARICO ACQUA	VANNE DE VIDANGE D'EAU	WASSERABFLUSSVENTIL
25	CM 25690806	CM 25690806	DRAIN FITTING	RACCORDO SCARICO	RACCORD ÉVACUATION EAU	WASSERABFLUSSNIPPEL
26	CM 19870825	CM 19870826	THERM. EXP. VALVE	VALVOLA ESPANS. TERMOSTATICA	DETENDEUR	EXPANSION VENTIL
27	CM 18562060	CM 18562060	FAN MOTOR ASSY	ASS. MOTOVENTILATORE	ENS. MOTOVENTILATEUR	LUFTERMOTOR KOMPL
28	CM 25725455	CM 25725455	BRACKET	SUPPORTO	SUPPORT	TRAEGER
29	CM 25570190	CM 25570190	PLATE	PIASTRINA	PLAQUETTE	PLATTE
30	CM 19031000	CM 19031000	GROMMET/PADS	AMMORTIZZATORE	SILENT BLOCS	GUMMIBUCHSE
31	CM 19060306	CM 19060306	SLEEVE	BUSSOLA	ENTRETOISE	BUCHSE
32	CM 12792099	CM 12792099	SCREW	VITE	VIS	SCHRAUBE
56	CM 25550049	CM 25550060	REAR PANEL	PANNELLO POSTERIORE	PANNEAU ARRIERE	RUECKWAND

SV 210-310 - COMPRESSOR CHART - LISTA COMPRESSORI - LISTE DES COMPRESSEURS - KOMPRESSORENLISTE

MODEL MODELLO MODELE MODELL	VOLTS VOLTAGGIO TENSION SPANNUNG	COMPRESSOR MODEL MODELLO COMPRESSORE TYPE DU COMPRESSEUR KOMPRESSOR TYP	COMPRESSOR ASSY ASS. COMPRESSORE ENS. COMPRESSEUR NUR KOMPRESSOR	RELAY RELE' RELAIS RELAIS	PROTECTOR PROTETTORE PROTECTEUR SCHUTZGERAT	START CAPACITOR CAPACITA' D'AVV. CAPACITE DE DEMARR. START KONDENSATOR	RUN CAPACITOR CAPACITA' DI MARCIA CAPACITÉ PERMANENT BETRIEB KONDENSATOR
SV 210	115/60/1		–	–	–	–	–
SV 310	115/60/1		–	–	–	–	–
SV 210	220/60/1	U.H. CAJ 9513 Z	CM 19165552	CM 19621688	CM 19560193	620167 00	620167 21
SV 310	220/60/1	–	–	–	–	–	–
SV 210	220/50/1	U.H. CAJ 9513 Z	CM 19165550	CM 19621687	CM 19560192	620167 00	620167 21
SV 310	220/50/1	U.H. FH 4522 Z	CM 19165551	CM 19621687	–	620167 07	620171 01

SV 210-310 - ELECTRIC COMPONENT CHART - LISTA COMPONENTI ELETTRICI
LISTE DES COMPOSANTS ELECTRIQUES - ELEKTRISCHER TEILLISTE

MODEL MODELLO MODELE MODELL	VOLTS VOLTAGGIO TENSION SPANNUNG	RELAY/CONTACTOR RELE'/TELERUTTORE RELAIS/CONTACTEUR RELAIS/MAGNETSCHALTER	ELECTR. CONTR. BOARD SCHEDA ELETTR. CARTE ELECTR. STEUERKARTE	WATER DRAIN VALVE VALVOLA SCAR. ACQUA V.E.M. VIDANGE EAU W/ABFLUSSVENTIL	HOT GAS VALVE VALVOLA GAS CALDO V.E.M. GAS CHAUDS HEISS GAZ VENTIL	WATER PUMP ASSY ASS. POMPA ENS. POMPE A EAU WASSER PUMPE	FAN MOTOR ASSY ASS. MOTOVENTILATORE ENS. MOTOVENTILATEUR LUFTER MOTOR KMPL.
SV 210 **SV 31**	115/60/1	–	–	–	–	793113.10	–
SV 210 **SV 310**	220/60/1	630119.00	CM 33580043	CM 19865525	CM 19863034	793113.11	CM 18562052
SV 210 **SV 310**	220/50/1	630119.00	CM 33580043	CM 19865525	CM19863034	793113.09	CM18562058

SIMAG
ICE MACHINES

www.simag.it

SIMAG
via Risorgimento, 4
20017 Mazzo di Rho (MI) - Italy
Tel. +39 02 93900215 (Commerciale - Sales Dept.)
Tel. +39 02 93960357 (Assistenza - Service Dept.)
Fax +39 02 93900226 (Commerciale - Sales Dept.)
Fax +39 02 93960366 (Assistenza - Service Dept.)
e-mail: sales@simag.it
e-mail: service@simag.it

Singapore Office
SIMAG FAR EAST
627A Aljunied Road
04-04 Biztech Centre
Singapore 389842
Tel. ++65 6738 5393
Fax ++65 6738 1959
e-mail: scotsice@singnet.com.sg

Certified ISO 9001
TOTAL QUALITY