LIST OF THE EXPLODED VIEWS

3rd VERSION

From s/n. 213748 till Today



- SHELL ASSY
- COOLING SYSTEM
- HYDRAULIC CIRCUIT
- ELECTRIC PARTS

2nd VERSION

From s/n. 144814 till s/n. 213747



- SHELL ASSY
- COOLING SYSTEM
- HYDRAULIC CIRCUIT
- ELECTRIC PARTS

Rev. 9 - 21/06/2011

SHELL ASSY

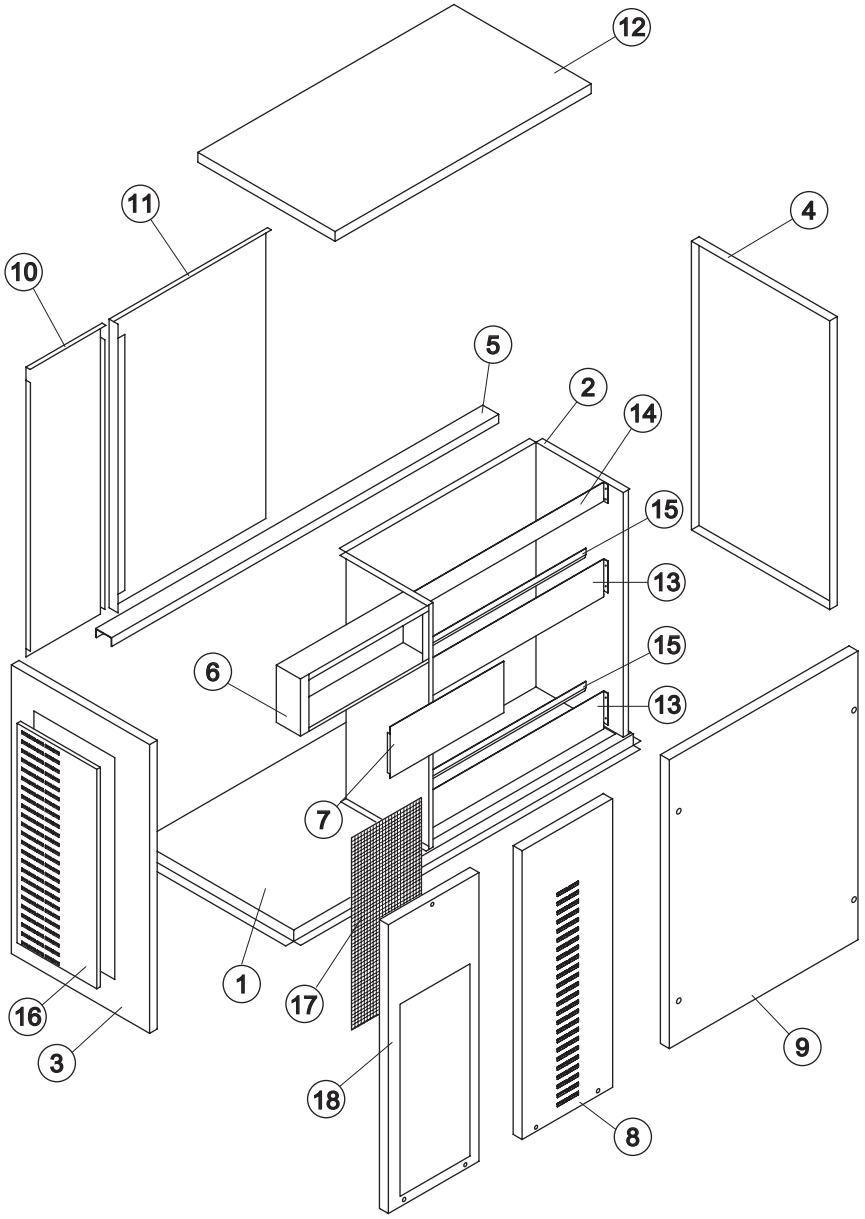

Ref.	Spare Descrption	Code
1	Base Plate	21240
2	Evaporator Chamber	22889
3	Left Side Panel	22736
4	Right Side Panel	22735
5	Cross Bar	22838
6	Electrical Box	22837
7	Electrical Parts Plate	21239
9	Front Panel (Bin Side)	C22744
10	Rear Panel (Group Side)	21288
11	Rear Panel (Bin Side)	21241
12	Top Assy	22738
13	Bulkhead	22890
14	Upper Bulkhead	22809
15	Inner Basin Reiforcement	22740
16	Left Side Panel	22810

Parts for Air-Cooled Version Only

Ref.	Spare Description		Code
17*	Filter	From s/n. 217604	18178
18	Fron Panel (Group Side)	Current Version	22986
8	Fron Panel (Group Side)	Till s/n. 217603	22741

Parts for Water-Cooled Version Only

Ref.	Spare Description	Code
8	Fron Panel (Group Side)	22741

Rev. 9 - 21/06/2011

COOLING SYSTEM

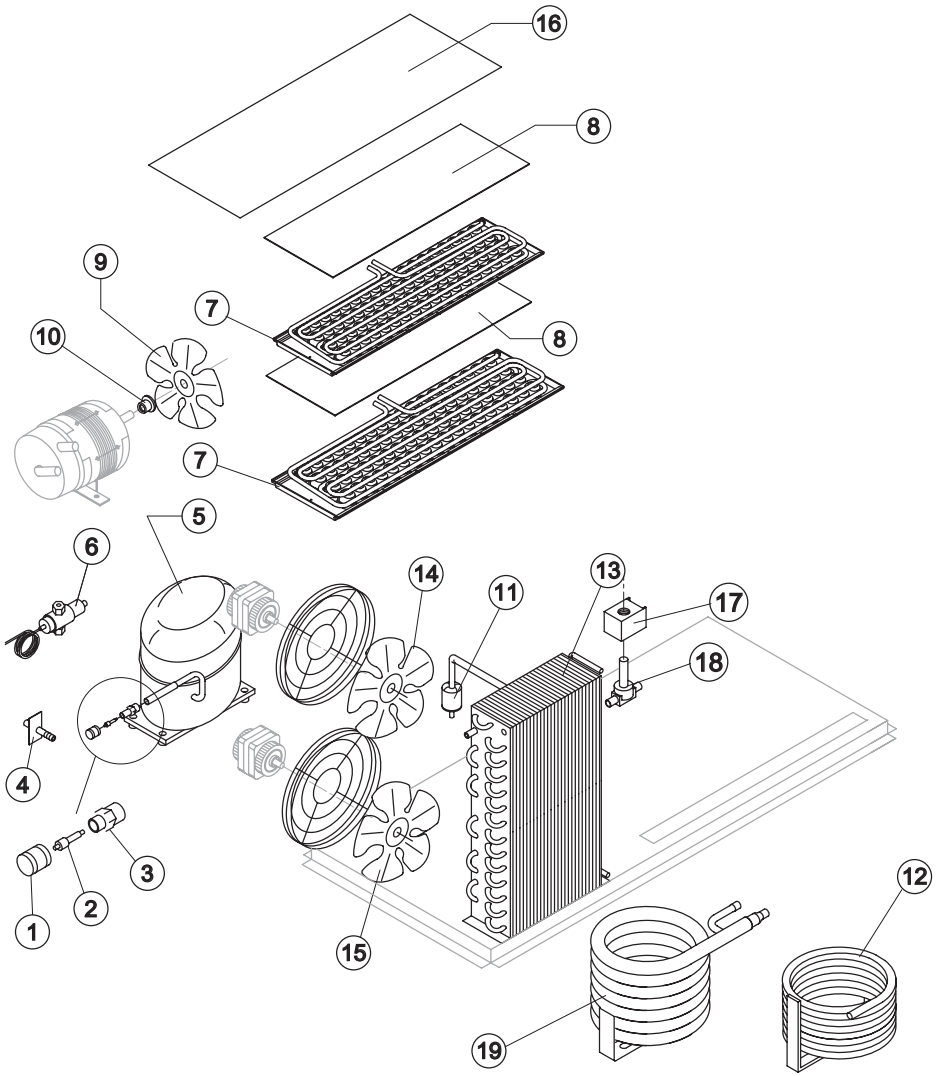

Rev. 9 - 21/06/2011

Common Parts

Ref.	Spare Description		Code
1*	Vacuum-Charge Valve Plug		14006
2*	Vacuum-Charge Valve Device		14005
3	Vacuum-Charge Valve Body		14007
5	Compressor	See Table	-
7	Evaporator	See Table	-
8	Evaporator Cover Panel		10058
9	Sucking Fan		10213
10	Fan Fixing Hub		10014
11*	Solid Core Drier		14084
16	Upper Evaporator Cover Panel		10439
17*	Hot Gas Valve Coil		23091
18*	Hot Gas Valve Body		20409

Parts for Air-Cooled Version Only

Ref.	Spare Description		Code
13	Air Condenser		20406
14	Sucking Fan 275 / 34°		20153
15	Sucking Fan 275 / 34°	Current Version	20153
15	Sucking Fan 254 / 31°	Till s/n. 217603	20031

Parts for Water-Cooled Version Only

Ref.	Spare Description		Code
4	Rubber Holder with Plate	Current Version	20938
4	Rubber Holder with Plate	Till s/n. 459880	C20462
6	Pressostatic Valve		20149
12	Water Condenser	Till s/n. 537714	14617
19	Water Condenser	Current Version	14660

Ref. 5 - Compressor

Voltage	Code Current Version	Code Till s/n. 217603
T11	23647	23489
T12	23651	23527
T14	23708	23563
T15	23709	23453
T16	23708	23563
T18	23651	-

Ref. 7 - Evaporator

Kind of Cube	Code
18 g. (Standard)	D10214
33 g.	D10092
13 g.	D10126
42 g.	D10477
60 g.	D10555

HYDRAULIC CIRCUIT

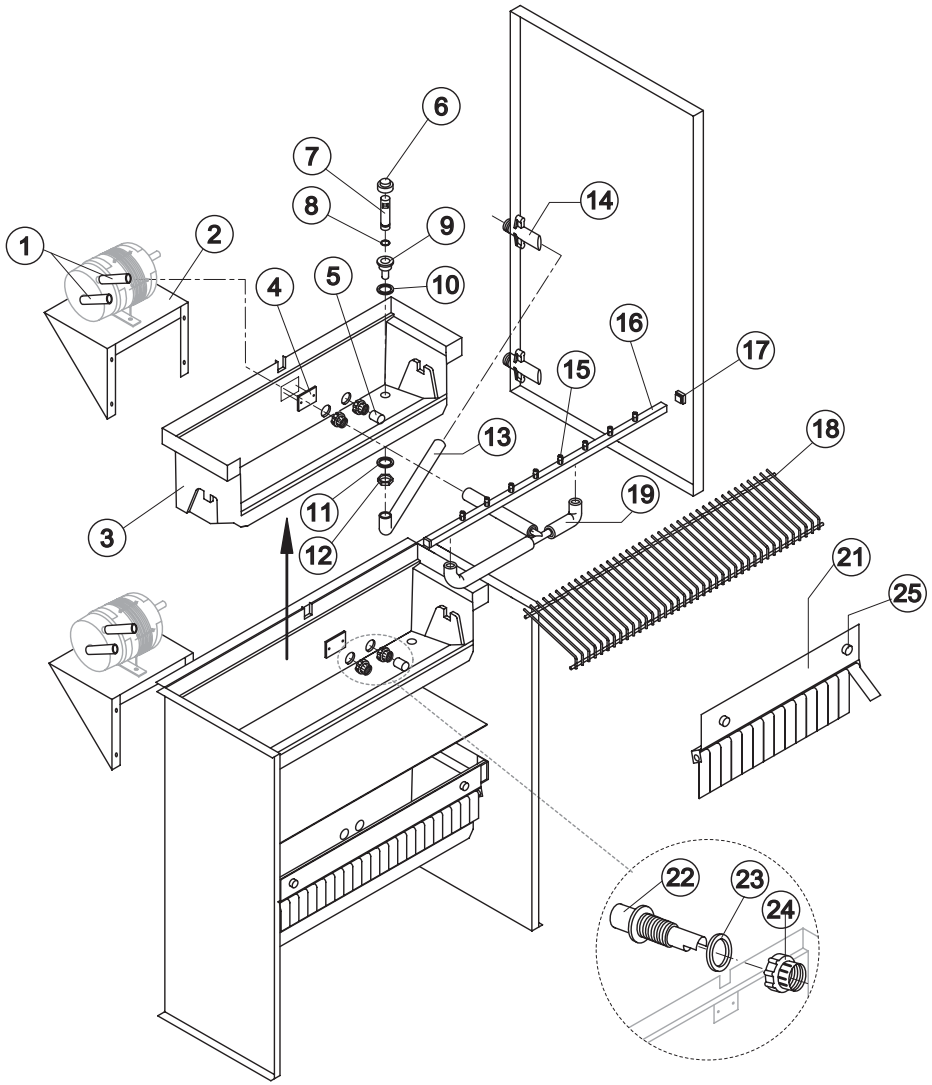

Common Parts

Ref.	Spare Description		Code
1	Pump Suction/Delivery Pipe		13150
2	Pump Support Plate		21277
3	Inner Basin		10440
4	Slide Keep Plate	Till s/n. 233485	10009
5*	Pump Suction Filter		20005
6	Overflow Cap	Till s/n. 243833	10305
7*	Overflow Pipe		10133
8*	OR Gasket for Overflow Pipe		20233
9	Water Outlet Nipple		10471
10	Silicone Gasket		13006
11	Semirigid Polyethylene Gasket		13007
12	Bin Discharge Nut		10096
13	Water Discharge Pipe		13054
14	Discharges Manifold		C10415
15	Sprayer		D20002
16*	Sprayers Bar Assembly	See Table	-
17	Sprayers Bar Plug		10012
18	Ice Cubes Slide	See Table	-
19	Sprayers Bar Pipe Connection		C13036
21	Flags Support Assy		C22134
22	Fitting of the Pump Suction/Delivery Pipes		10424
23	Gasket for Pump Suction/Delivery Pipes		13143
24	Fittings Locking Ring		10405
25	Fixing Screw		20009

Ref. 16 - Sprayers Bar Ass.*

Kind of Cube	Code
18 g. (Standard)	C20144
33 g.	C20157
13 g.	C20200
42 g.	C20157
60 g.	C20941

Ref. 18 - Ice Cube Slide

Kind of Cube	Code
18 g. (Standard)	D12022
33 g.	D12033
13 g.	D12040
42 g.	D12033
60 g.	D12084

Rev. 9 - 21/06/2011

ELECTRIC PARTS

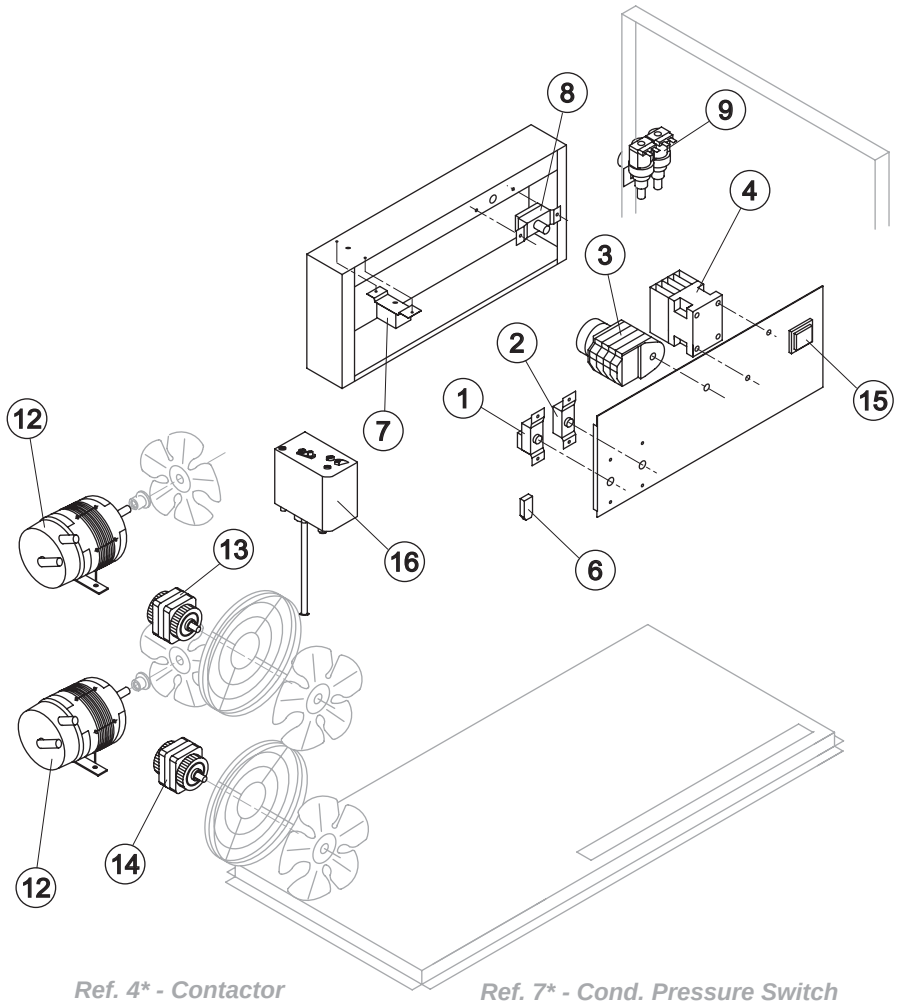

Rev. 9 - 21/06/2011

Common Parts

Ref.	Spare Description		Code
1*	Bin Thermostat		R23421
2*	Evaporator Thermostat		R23591
3*	Timer	See Table	-
4*	Contactor		23147
8	Safety Pressure Switch		23342
9*	2 Ways- Water Inlet Valve		23157
12*	Pump Assy		C23691
15*	On/Off Rocker Switch		23327
16	Low pressure safety switch		23763

Parts for Air-Cooled Version Only

Ref.	Spare Description		Code
6	Anti Radio Interference Filter	Only T11, T14, T15	C23459
7*	Condenser Pressure Switch	See Table	-
13	Fan Motor		23121
14	Fan Motor	Current Version	23121
14	Fan Motor	Till s/n. 217603	See Table

Ref. 3* - Timer

Voltage	18g Cube	33g Cube	13g Cube	42g Cube	60g Cube
T11	23247	23248	23472	23780	23922
T12	23222	23780	23247	23780	TBD
T14	23247	23248	23472	23780	TBD
T15	23247	23248	23472	23780	23922
T16	23222	23780	23247	23780	TDB
T18	23222	23780	23247	23780	TBD

Ref. 4* - Contactor

Voltage	Code
T11	23147
T12	23963
T14	23147
T15	23147
T16	23963
T18	23963

Ref. 7* - Cond. Pressure Switch

Voltage	Code
T11	23175
T12	23175
T14	23175
T15	23175
T16	23175
T18	23680

Ref. 9* - 2 Ways- Water Inlet Valve

Voltage	18/13g Cube	33g Cube	42g Cube	60g Cube
T11	23157	23157	23784	23784
T12	23157	23784	23784	23784
T14	23157	23157	23784	23784
T15	23157	23157	23784	23784
T16	23157	23784	23784	23784
T18	23157	23784	23784	23784

Ref. 14* - Fan Motor

Till s/n. 217603

Voltage	Code
T11	23067
T12	23681
T14	23067
T15	23067
T16	23681

SHELL ASSY

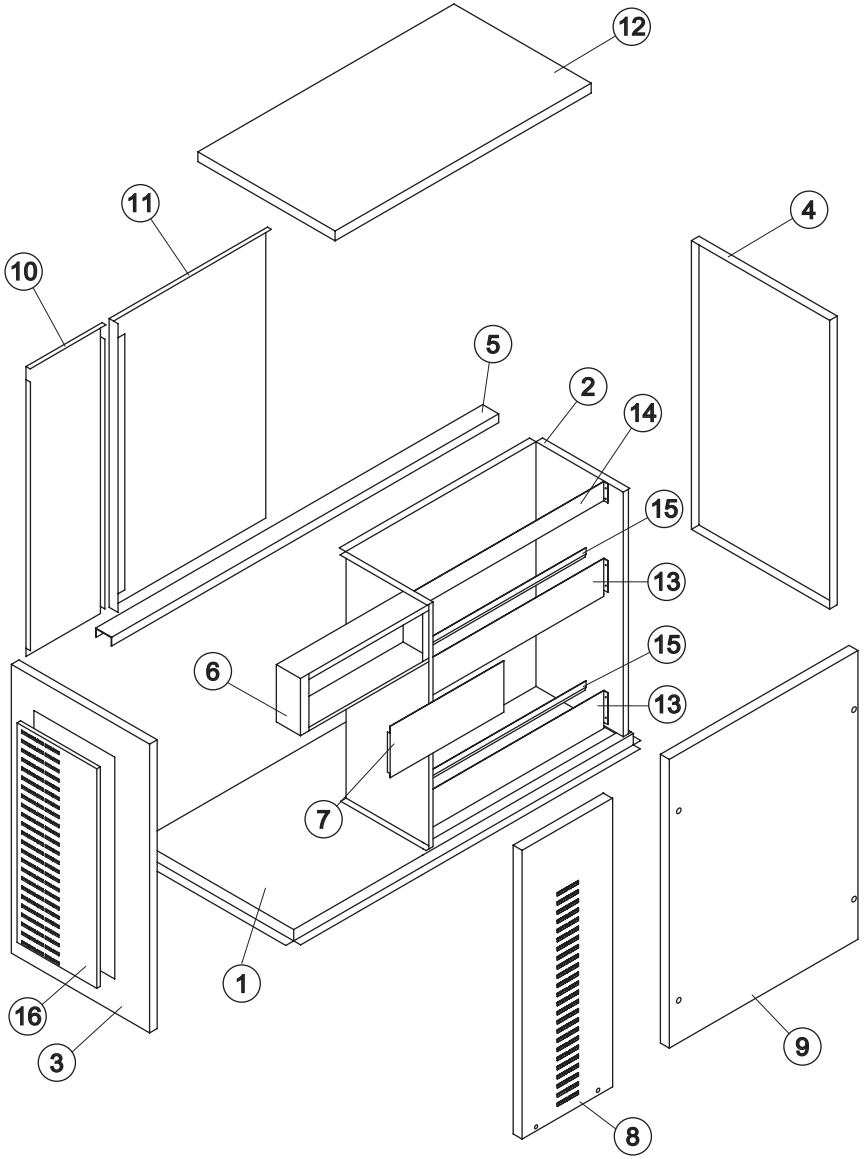

Ref.	Spare Descrption	Code
1	Base Plate	21240
2	Evaporator Chamber	22737
3	Left Side Panel	22736
4	Right Side Panel	22735
5	Cross Bar	22838
6	Electrical Box	22837
7	Electrical Parts Plate	21239
8	Fron Panel (Group Side)	22741
9	Front Panel (Bin Side)	C22744
10	Rear Panel (Group Side)	21288
11	Rear Panel (Bin Side)	21241
12	Top Assy	22738
13	Bulkhead	22739
14	Upper Bulkhead	22809
15	Inner Basin Reiforcement	22740
16	Left Side Panel	22810

Rev. 9 - 21/06/2011

COOLING SYSTEM

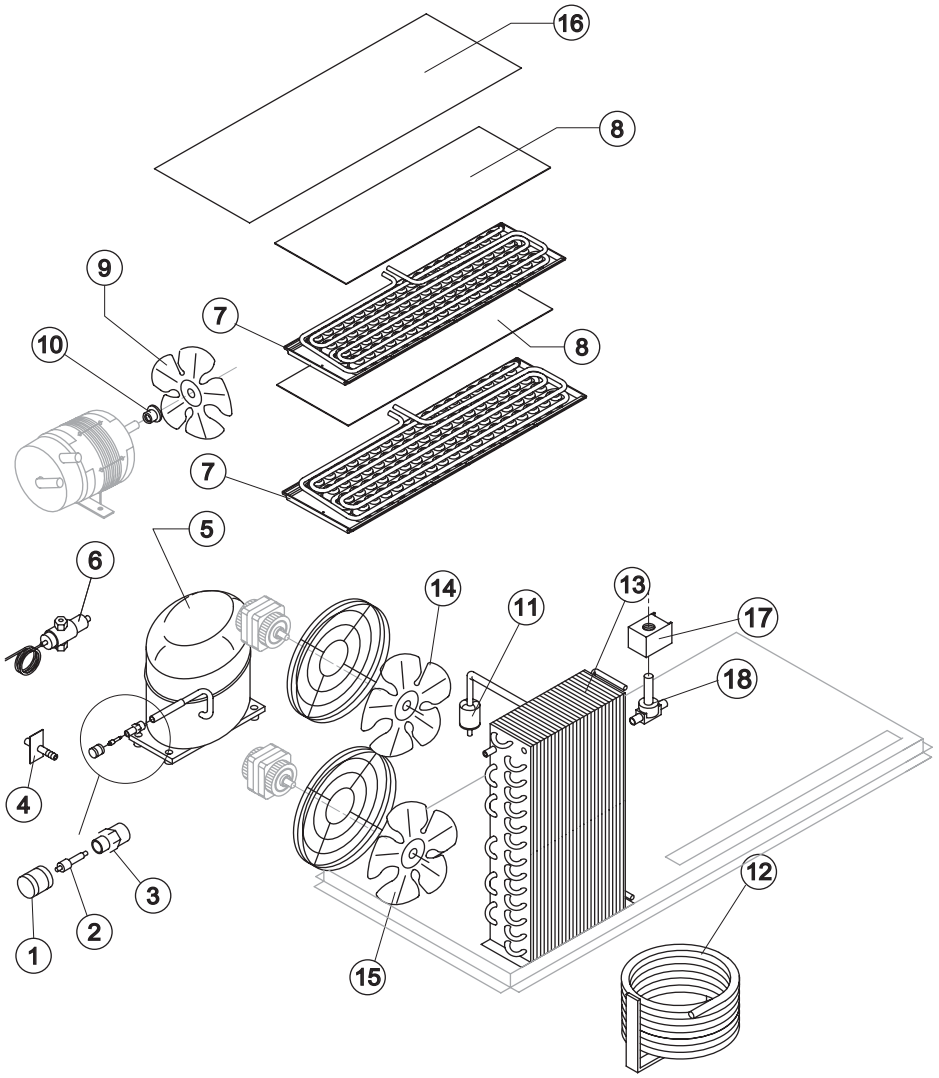

Rev. 9 - 21/06/2011

Common Parts

Ref.	Spare Description		Code
1*	Vacuum-Charge Valve Plug		14006
2*	Vacuum-Charge Valve Device		14005
3	Vacuum-Charge Valve Body		14007
5	Compressor	See Table	-
7	Evaporator	See Table	-
8	Evaporator Cover Panel		10058
9	Sucking Fan		10213
10	Fan Fixing Hub		10014
11*	Solid Core Drier		14084
17*	Hot Gas Valve Coil		23091
18*	Hot Gas Valve Body		20409

Parts for Air-Cooled Version Only

Ref.	Spare Description	Code
13	Air Condenser	20406
14	Sucking Fan 275 / 34°	20153
15	Sucking Fan 254 / 31°	20031

Parts for Water-Cooled Version Only

Ref.	Spare Description		Code
4	Rubber Holder with Plate	Current Version	20938
4	Rubber Holder with Plate	Till s/n. 459880	C20462
6	Pressostatic Valve		20149
12	Water Condenser		14617

Ref. 5 - Compressor

Voltage	Code
T11	23489
T12	23527
T14	23563
T15	23453
T16	23563

Ref. 7 - Evaporator

Kind of Cube	Code
18 g. (Standard)	D10214
33 g.	D10092
13 g.	D10126
42 g.	D10477

HYDRAULIC CIRCUIT

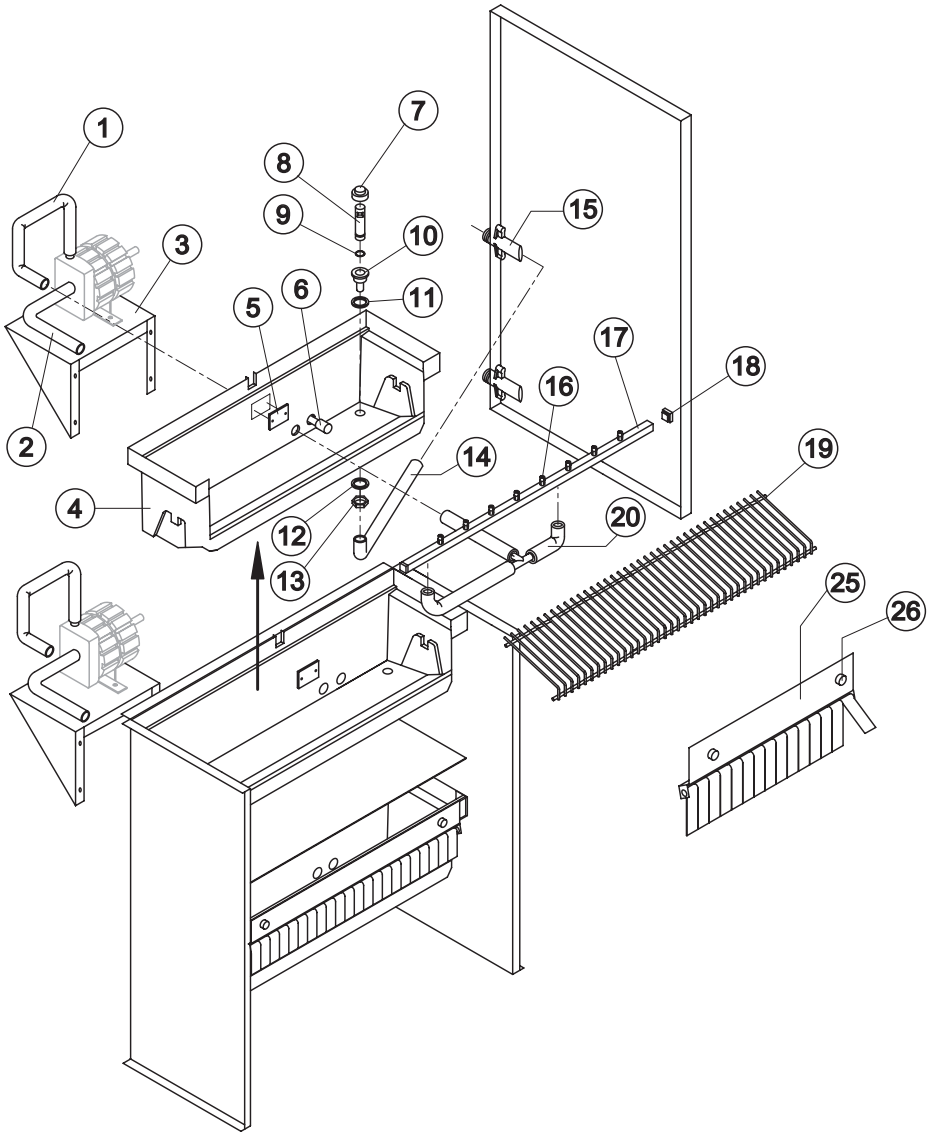

Common Parts

Ref.	Spare Description		Code
1	Pump Delivery Pipe		13133
2	Pump Suction Pipe		13047
3	Pump Support Plate		21277
4	Inner Basin		10055
5	Slide Keep Plate		10009
6	Pump Suction Filter		20005
7	Overflow Cap		10305
8	Overflow Pipe		10133
9	OR Gasket for Overflow Pipe		20233
10	Water Outlet Nipple		10007
11	Silicone Gasket		13006
12	Semirigid Polyethylene Gasket		13007
13	Bin Discharge Nut		10096
14	Water Discharge Pipe		13067
15	Discharges Manifold		C10415
16	Sprayer		D20002
17	Sprayers Bar Assembly	See Table	-
18	Sprayers Bar Plug		10012
19	Ice Cubes Slide	See Table	-
20	Sprayers Bar Pipe Connection		C13036
25	Flags Support Assy		C22134
26	Fixing Screw		20009

Ref. 17 - Sprayers Bar Ass.

Kind of Cube	Code
18 g. (Standard)	C20144
33 g.	C20157
13 g.	C20200

Ref. 19 - Ice Cubes Slide

Kind of Cube	Code
18 g. (Standard)	D12022
33 g.	D12033
13 g.	D12040

Rev. 9 - 21/06/2011

ELECTRIC PARTS

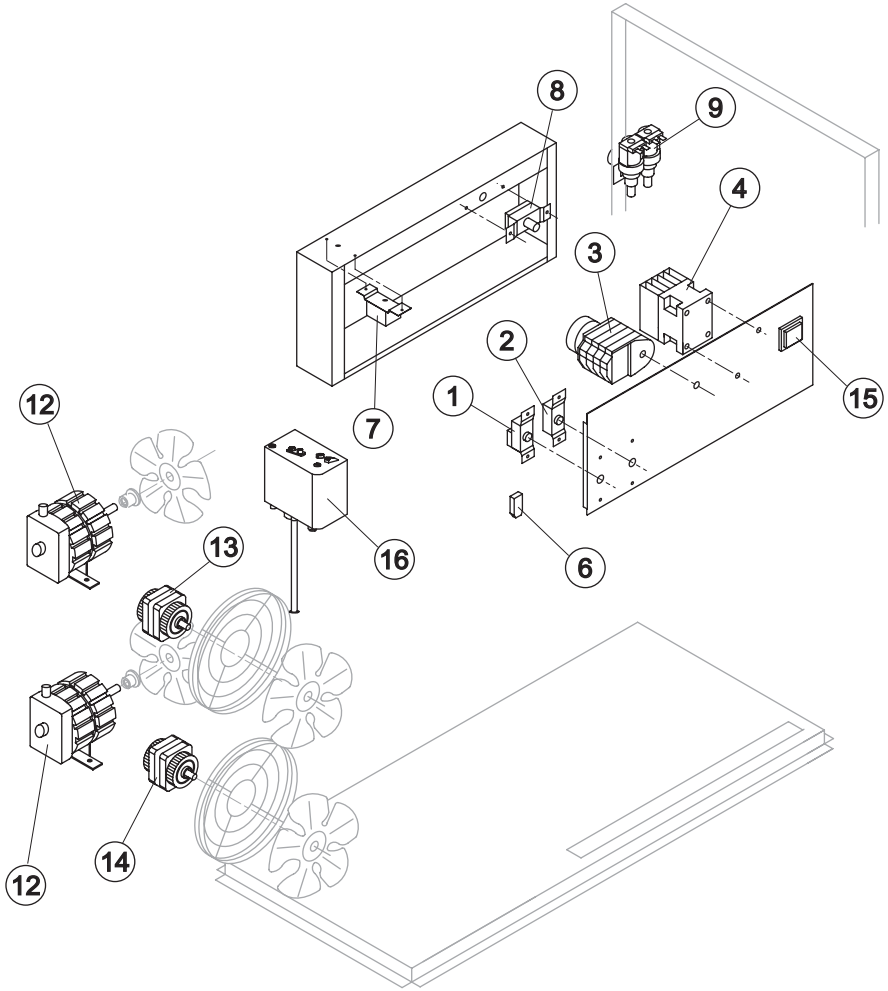

Rev. 9 - 21/06/2011

Common Parts

Ref.	Spare Description		Code
1*	Bin Thermostat		R23421
2*	Evaporator Thermostat		R23591
3*	Timer	See Table	-
4*	Contactor	See Table	-
8	Safety Pressure Switch		23342
9*	2 Ways- Water Inlet Valve		23157
12	Pump Assy		C23068
15*	On/Off Rocker Switch		23327
16	Low pressure safety switch		23763

Parts for Air-Cooled Version Only

Ref.	Spare Description		Code
6	Anti Radio Interference Filter	Only T11, T14, T15	C23459
7*	Condenser Pressure Switch	See Table	-
13	Fan Motor		23121
14	Fan Motor		See Table

Ref. 3* - Timer

Voltage	18 g Cube	33 g Cube	13 g Cube	42 g Cube
T11	23247	23248	23472	23780
T12	23222	23780	23247	23780
T14	23247	23248	23472	23780
T15	23247	23248	23472	23780
T16	23222	23780	23247	23780
T18	23222	23780	23247	23780

Ref. 4* - Contactor

Voltage	Code
T11	23147
T12	23963
T14	23147
T15	23147
T16	23963

Ref. 7* - Cond. Pressure Switch

Voltage	Code
T11	23175
T12	23175
T14	23175
T15	23175
T16	23175

Ref. 9* - 2 Ways- Water Inlet Valve

Voltage	18/13 g Cube	33 g Cube	42 g Cube
T11	23157	23157	23784
T12	23157	23784	23784
T14	23157	23157	23784
T15	23157	23157	23784
T16	23157	23784	23784

Ref. 14* - Fan Motor

Voltage	Code
T11	23067
T12	23681
T14	23067
T15	23067
T16	23681