| Mod./Type: | _70/... - _90/... FRE13 - _70/... - _90/... FRE17 - _90/... FRE21 EXTREME | cod./num. | 2531859.00 |
|---|---|---|---|
| | | data/date: | 19/09/2014 |

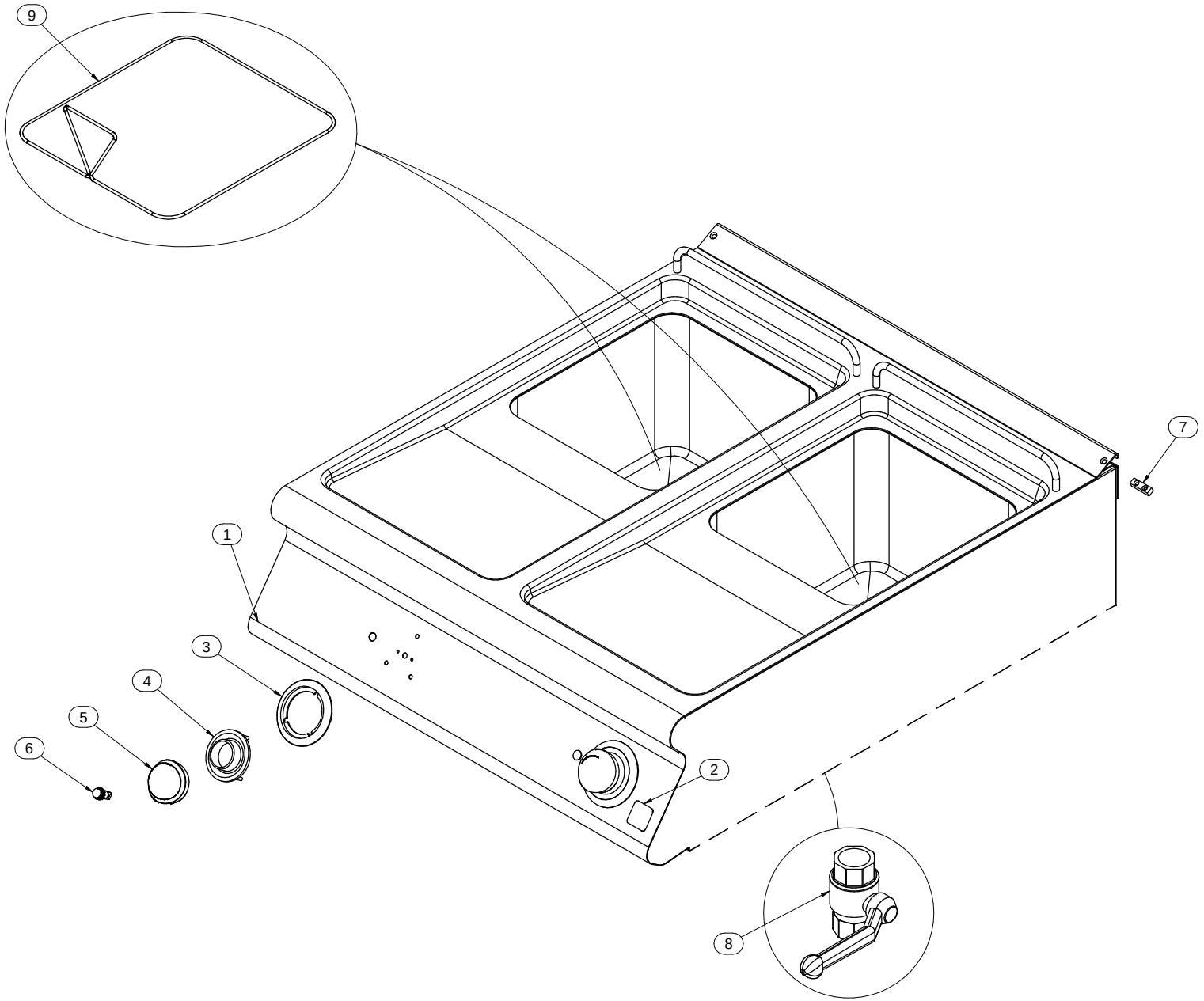

Mod./Type: **_70/... FRE13 - ...FRE17 - _ 90/... FRE13 - ...FRE17 - ...FRE21 EXTREME**

cod./num. 2531861.00

data/date: 19/09/2014

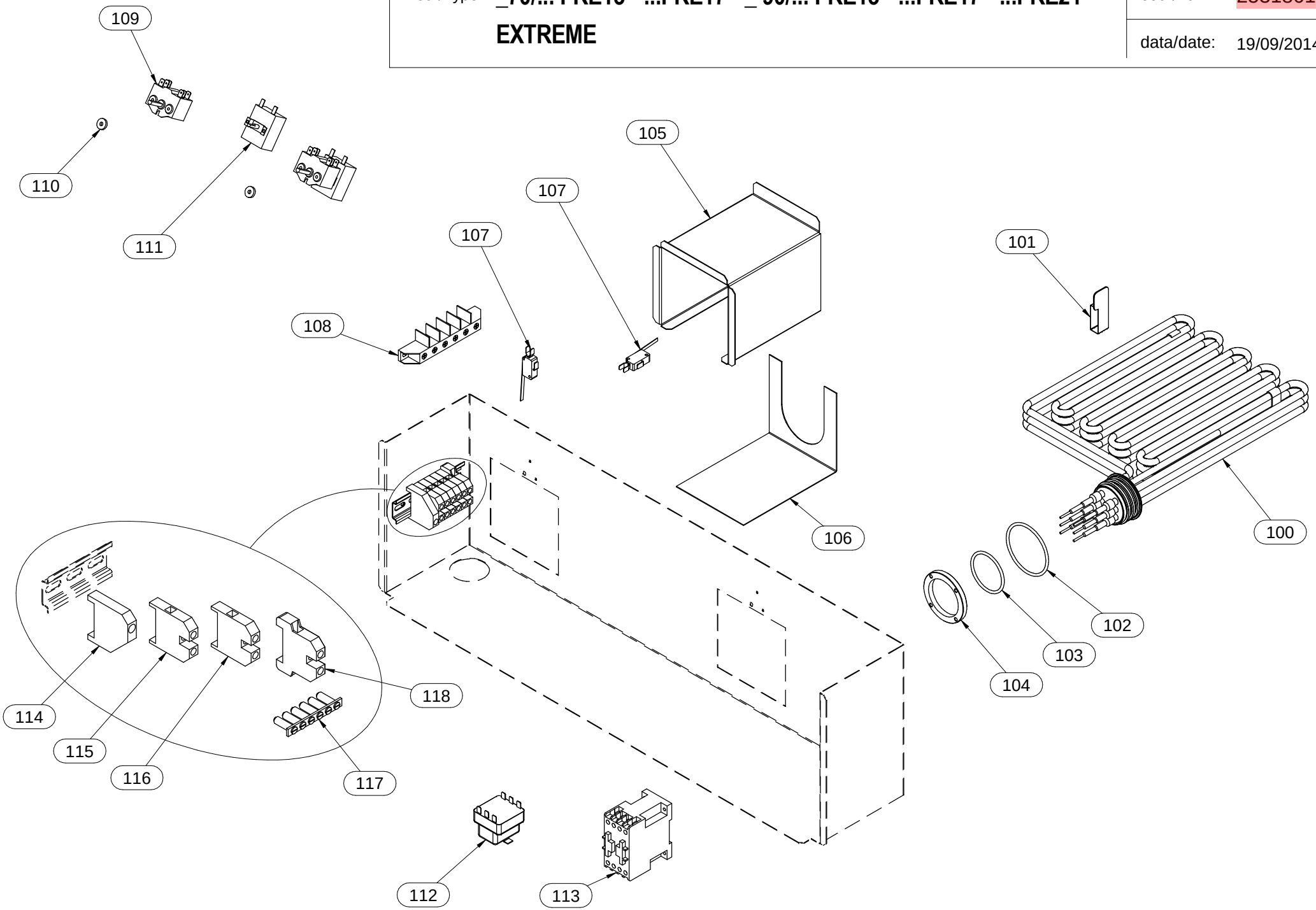

Mod./Type: **EM70 - EM90 .../40 ... - .../80 ... - .../120 ...**

**EM90/160 ... VANO / CABINET**

cod./num. 2531578.00

data/date: 05/06/2014

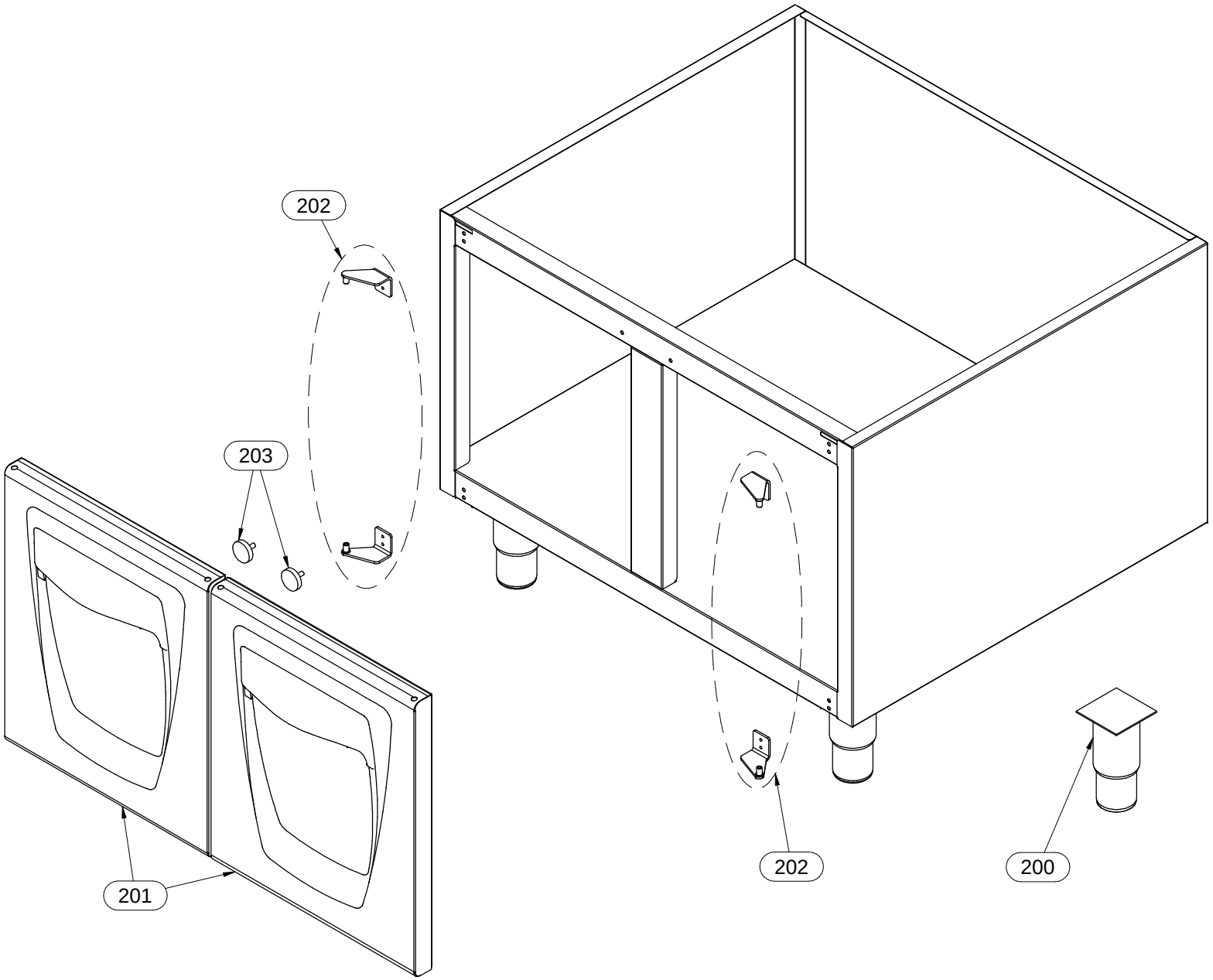

| Mod.: | _70/... - _90/... FRE... EXTREME | | | cod. / num. 2531860.00<br>data / date 19/09/2014<br>rif. / ref. 2531859.00 | | EM70/40 FRE13 | EM70/80 FRE13 | EM70/40 FRE17 | EM70/80 FRE17 | EM90/40 FRE13 | EM90/80 FRE13 | EM90/40 FRE17 | EM90/80 FRE17 | EM90/40 FRE21 | EM90/80 FRE21 | NOTE | |
|---|---|---|---|---|---|---|---|---|---|---|---|---|---|---|---|---|---|
| POS. | DESCRIZIONE | DESCRIPTION | DENOMINATION | BENENNUNG | COD. | Q.ty | | | | | | | | | | | |
| 1 | CRUSCOTTO | CONTROL PANEL | BANDEAU | BEDIENBLENDE | 6111165.13 | 1 | | 1 | | 1 | | 1 | | 1 | | | |
| | | | | | 6111166.13 | | 1 | | 1 | | 1 | | 1 | | 1 | | |
| 2 | MARCHIO | BRAND NAME | MARQUE | MARKENZEICHEN | 982.021.00 | 1 | 1 | 1 | 1 | 1 | 1 | 1 | 1 | 1 | 1 | FROM: 15.12.2011 | TO: 31.01.2014 |
| | | | | | 982.023.00 | 1 | 1 | 1 | 1 | 1 | 1 | 1 | 1 | 1 | 1 | FROM: 01.02.2014 | TO:... |
| 3 | SERIGRAFIA | SCREEN PRINT | SÉRIGRAPHIE | SIEBDRUCK | 910.174.00 | 1 | 2 | 1 | 2 | 1 | 2 | 1 | 2 | 1 | 2 | | |
| 4 | LABIRINTO | LABYRINTH | LABYRINTHE | LABYRINTH | 256.235.00 | 1 | 2 | 1 | 2 | 1 | 2 | 1 | 2 | 1 | 2 | | |
| 5 | MANOPOLA | KNOB | BOUTON | DREHKNOPF | 256.234.00 | 1 | 2 | 1 | 2 | 1 | 2 | 1 | 2 | 1 | 2 | | |
| 6 | LAMPADA SPIA ARANCIO | ORANGE INDICATOR LIGHT | LAMPE TEMOIN ORANGE | ORANGE KONTROLLAMPE | 963.013.00 | 1 | 2 | 1 | 2 | 1 | 2 | 1 | 2 | 1 | 2 | | |
| 7 | PIASTRINA GIUNZIONE | FIXING PLATE | PLAQUETTE FIXAGE | BEFESTIGUNGSPLATTE | 941.130.00 | 1 | 1 | 1 | 1 | 1 | 1 | 1 | 1 | 1 | 1 | | |
| 8 | VALVOLA | VALVE | SOUPAPE | VENTIL | 678.007.00 | 1 | 2 | 1 | 2 | 1 | 2 | 1 | 2 | 1 | 2 | | |
| 9 | FILTRO | FILTER | FILTER | FILTER | 683.096.00 | 1 | 2 | | | 1 | 2 | | | | | | |
| | | | | | 983.048.00 | | | 1 | 2 | | | 1 | 2 | | | | |
| | | | | | 983.045.00 | | | | | | | | | 1 | 2 | | |
| 10 | | | | | | | | | | | | | | | | | |
| 11 | | | | | | | | | | | | | | | | | |
| 12 | | | | | | | | | | | | | | | | | |
| 13 | | | | | | | | | | | | | | | | | |
| 14 | | | | | | | | | | | | | | | | | |
| 15 | | | | | | | | | | | | | | | | | |
| 16 | | | | | | | | | | | | | | | | | |
| 17 | | | | | | | | | | | | | | | | | |
| 18 | | | | | | | | | | | | | | | | | |
| 19 | | | | | | | | | | | | | | | | | |
| 20 | | | | | | | | | | | | | | | | | |
| 21 | | | | | | | | | | | | | | | | | |
| 22 | | | | | | | | | | | | | | | | | |
| 23 | | | | | | | | | | | | | | | | | |
| 24 | | | | | | | | | | | | | | | | | |
| 25 | | | | | | | | | | | | | | | | | |
| 26 | | | | | | | | | | | | | | | | | |
| 27 | | | | | | | | | | | | | | | | | |
| 28 | | | | | | | | | | | | | | | | | |
| 29 | | | | | | | | | | | | | | | | | |
| 30 | | | | | | | | | | | | | | | | | |
| 31 | | | | | | | | | | | | | | | | | |
| 32 | | | | | | | | | | | | | | | | | |
| 33 | | | | | | | | | | | | | | | | | |
| 34 | | | | | | | | | | | | | | | | | |
| 35 | | | | | | | | | | | | | | | | | |
| 36 | | | | | | | | | | | | | | | | | |
| 37 | | | | | | | | | | | | | | | | | |

| Mod.: | _70/… FRE... - _90/… FRE… EXTREME | | | cod. / num. 2531862.00<br>data / date 18/09/2014<br>rif. / ref. 2531645.00 | | _70/40 FRE13 | _70/80 FRE13 | _70/40 FRE17 | _70/80 FRE17 | _90/40 FRE13 | _90/80 FRE13 | _90/40 FRE17 | _90/80 FRE17 | _90/40 FRE21 | _90/80 FRE21 | NOTE |
|---|---|---|---|---|---|---|---|---|---|---|---|---|---|---|---|---|
| POS. | DESCRIZIONE | DESCRIPTION | DENOMINATION | BENENNUNG | COD. | Q.ty | | | | | | | | | | |
| 100 | RESISTENZA | HEATING ELEMENT | RESISTANCE | HEINZELEMENT | 665.101.00 | 1 | 2 | | | 1 | 2 | | | | | |
| | | | | | 665.100.00 | | | 1 | 2 | | | 1 | 2 | | | |
| | | | | | 965.065.00 | | | | | | | | | 1 | 2 | |
| 101 | ATTIVATORE MICRO | MICRO ACTIVATOR | ACTIVATEUR MICRO | AKTIVATOR MICRO | 6221086.00 | 1 | 2 | 1 | 2 | 1 | 2 | 1 | 2 | 1 | 2 | |
| 102 | GUARNIZIONE | WASHER | GUARNITURE | DICHTUNGSRING | 653.018.00 | 1 | 2 | 1 | 2 | 1 | 2 | 1 | 2 | 1 | 2 | |
| 103 | GUARNIZIONE | WASHER | GUARNITURE | DICHTUNGSRING | 653.017.00 | 1 | 2 | 1 | 2 | 1 | 2 | 1 | 2 | 1 | 2 | |
| 104 | GHIERA | FERRULE | VIROLE | NUTMUTTER | 256.377.00 | 1 | 2 | 1 | 2 | 1 | 2 | 1 | 2 | 1 | 2 | |
| 105 | PROLUNGA | EXTENSION | RALLONGE | VERLÄNGERUNGSKABEL | 256.376.00 | - | - | - | - | 1 | 2 | 1 | 2 | 1 | 2 | |
| 106 | CHIUSURA | LOCK | FERMETURE | SCHLUSS | 9221331.15 | - | - | - | - | 1 | 2 | 1 | 2 | 1 | 2 | |
| 107 | MICROINTERRUTTORE | MICROSWITCH | MICROINTERRUPTEUR | SICHERUNGSSCHALTER | 761.004.00 | 1 | 2 | 1 | 2 | 1 | 2 | 1 | 2 | 1 | 2 | |
| 108 | MORSETTIERA | TERMINAL BOARD | BORNES | KLEMMENBRETT | M566050500 | 1 | 1 | 1 | - | 1 | 1 | 1 | - | 1 | - | |
| 109 | COMMUTATORE | CHANGE-OVER SWITCH | COMMUTATEUR | UMSCHALTER | 661.093.00 | 1 | 2 | 1 | 2 | 1 | 2 | 1 | 2 | 1 | 2 | |
| 110 | GUARNIZIONE | WASHER | GUARNITURE | DICHTUNGSRING | 953.020.00 | 1 | 2 | 1 | 2 | 1 | 2 | 1 | 2 | 1 | 2 | |
| 111 | TERMOSTATO | THERMOSTAT | THERMOSTAT | THERMOSTAT | 961.034.00 | 1 | 2 | 1 | 2 | 1 | 2 | 1 | 2 | 1 | 2 | |
| 112 | TERMOSTATO SICUREZZA | SAFETY THERMOSTAT | THERMOSTAT DE SECURITE | TEMPERATURBEGRENZER | 961.033.00 | 1 | 2 | 1 | 2 | 1 | 2 | 1 | 2 | 1 | 2 | |
| 113 | CONTATTORE | CONTACTOR | CONTACTEUR | FERNSCHALTER | 461.021.00 | 2 | 4 | | | 2 | 4 | | | | | |
| | | | | | 961.002.00 | | | 2 | 4 | | | 2 | 4 | | | |
| | | | | | 961.005.00 | | | | | | | | | 2 | 4 | |
| 114 | BLOCCAMORSETTI | TERMINAL STOPPER | BORNE BLOQUANT | BLÖCK-KLEMME | 663.059.00 | - | - | - | 1 | - | - | - | 1 | - | 1 | |
| 115 | MORSETTO | TERMINAL | BORNE | KLEMME | 663.061.00 | - | - | - | 5 | - | - | - | 5 | - | 5 | |
| 116 | MORSETTO BLU | BLUE TERMINAL | BORNE BLUE | NULL-KLEMME | 663.076.00 | - | - | - | 1 | - | - | - | 1 | - | 1 | |
| 117 | BARRETTE COLLEGAMENTO | CONNECTOR PIN | BARRETTE DE CONNECTION | VERBINDUNG-STAB | 663.056.00 | - | - | - | 1 | - | - | - | 1 | - | 1 | |
| 118 | MORSETTO TERRA - PE | PE-TERMINAL | BORNE PE | ERD-KLEMME | 663.060.00 | - | - | - | 1 | - | - | - | 1 | - | 1 | |
| 119 | | | | | | | | | | | | | | | | |
| 120 | | | | | | | | | | | | | | | | |
| 121 | | | | | | | | | | | | | | | | |
| 122 | | | | | | | | | | | | | | | | |
| 123 | | | | | | | | | | | | | | | | |
| 124 | | | | | | | | | | | | | | | | |
| 125 | | | | | | | | | | | | | | | | |
| 126 | | | | | | | | | | | | | | | | |
| 127 | | | | | | | | | | | | | | | | |
| 128 | | | | | | | | | | | | | | | | |
| 129 | | | | | | | | | | | | | | | | |
| 130 | | | | | | | | | | | | | | | | |
| 131 | | | | | | | | | | | | | | | | |
| 132 | | | | | | | | | | | | | | | | |
| 133 | | | | | | | | | | | | | | | | |
| 134 | | | | | | | | | | | | | | | | |
| 135 | | | | | | | | | | | | | | | | |

| Mod.: | EM70/... - EM90/…<br>VANO / CABINET | | | cod. / num. 2531579.00<br>data / date 05/06/2014<br>rif. / ref. 2531578.00 | | EM70/40 ... | EM70/80 ... | EM70/120 ... | EM90/40 ... | EM90/80 ... | EM90/120 ... | EM90/160 ... | NOTE | |
|---|---|---|---|---|---|---|---|---|---|---|---|---|---|---|
| POS. | DESCRIZIONE | DESCRIPTION | DENOMINATION | BENENNUNG | COD. | Q. ty | | | | | | | | |
| 200 | PIEDINO | FOOT | PIED | STELLFUSS | 912.090.00 | 4 | 4 | 4 | 4 | 4 | 4 | 6 | FROM: 15.12.2011 | TO: 17.05.2013 |
| | | | | | 912.090.14 | 4 | 4 | 4 | 4 | 4 | 4 | 6 | FROM: 18.05.2013 | TO:... |
| 201 | PORTA | DOOR | PORTE | TÜR | 256.215.00 | 1 | 2 | 3 | 1 | 2 | 3 | 4 | | |
| 202 | COPPIA CERNIERE | GASKETS PAIR | COUPLE CHARNIÈRES | SCHARNIERPAAR | 256.216.00 | 1 | 2 | 3 | 1 | 2 | 3 | 4 | | |
| 203 | MAGNETE | MAGNET | MAGNÉTO | MAGNET | 684.007.00 | 1 | 2 | 3 | 1 | 2 | 3 | 4 | FROM: 15.12.2011 | TO: 01.01.2014 |
| | | | | | 984.006.00 | 1 | 2 | 3 | 1 | 2 | 3 | 4 | FROM: 02.01.2014 | TO:... |
| 204 | | | | | | | | | | | | | | |
| 205 | | | | | | | | | | | | | | |
| 206 | | | | | | | | | | | | | | |
| 207 | | | | | | | | | | | | | | |
| 208 | | | | | | | | | | | | | | |
| 209 | | | | | | | | | | | | | | |
| 210 | | | | | | | | | | | | | | |
| 211 | | | | | | | | | | | | | | |
| 212 | | | | | | | | | | | | | | |
| 213 | | | | | | | | | | | | | | |
| 214 | | | | | | | | | | | | | | |
| 215 | | | | | | | | | | | | | | |
| 216 | | | | | | | | | | | | | | |
| 217 | | | | | | | | | | | | | | |
| 218 | | | | | | | | | | | | | | |
| 219 | | | | | | | | | | | | | | |
| 220 | | | | | | | | | | | | | | |
| 221 | | | | | | | | | | | | | | |
| 222 | | | | | | | | | | | | | | |
| 223 | | | | | | | | | | | | | | |
| 224 | | | | | | | | | | | | | | |
| 225 | | | | | | | | | | | | | | |
| 226 | | | | | | | | | | | | | | |
| 227 | | | | | | | | | | | | | | |
| 228 | | | | | | | | | | | | | | |
| 229 | | | | | | | | | | | | | | |
| 230 | | | | | | | | | | | | | | |
| 231 | | | | | | | | | | | | | | |
| 232 | | | | | | | | | | | | | | |
| 233 | | | | | | | | | | | | | | |
| 234 | | | | | | | | | | | | | | |