/A=PIANO CON ALZATINA
/A=SHELF+RIDGE
/A=PLATTE MIT RUECKLEISTE
/A=RAYON AVEC ETAGERE
/A=TOPE CON ELEV.

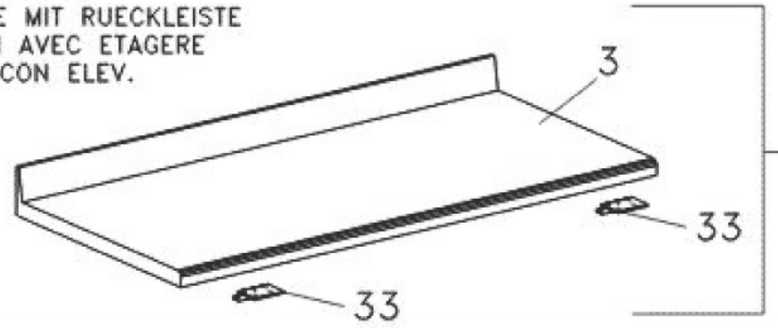

/X=PIANO SENZA ALZATINA
/X=SHELF WITHOUT RIDGE
/X=PLATTE OHNE RUECKLEISTE
/X=RAYON SANS ETAGERE
/X=TOPE SIN ELEV.

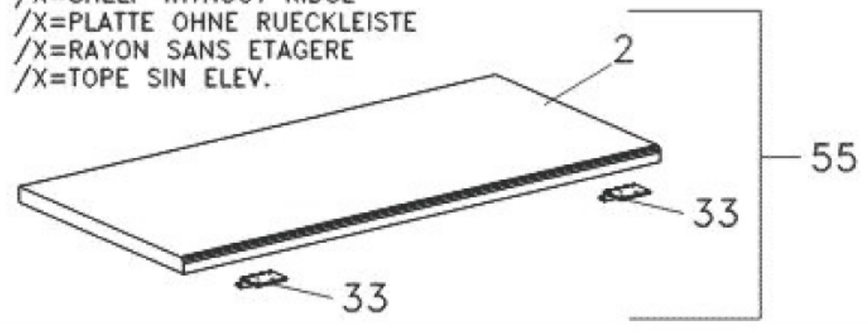

SOLO PER PORTE
DOORS ONLY
NUR FUER TUER
SEULEMENTO POUR PORTES
SOLO PUERTAS

SOLO PER CASSETTI
DRAWERS ONLY
NUR FUER SCHBLADEN
SEULEMENTO POUR TIROIRS
SOLO GAVETAS

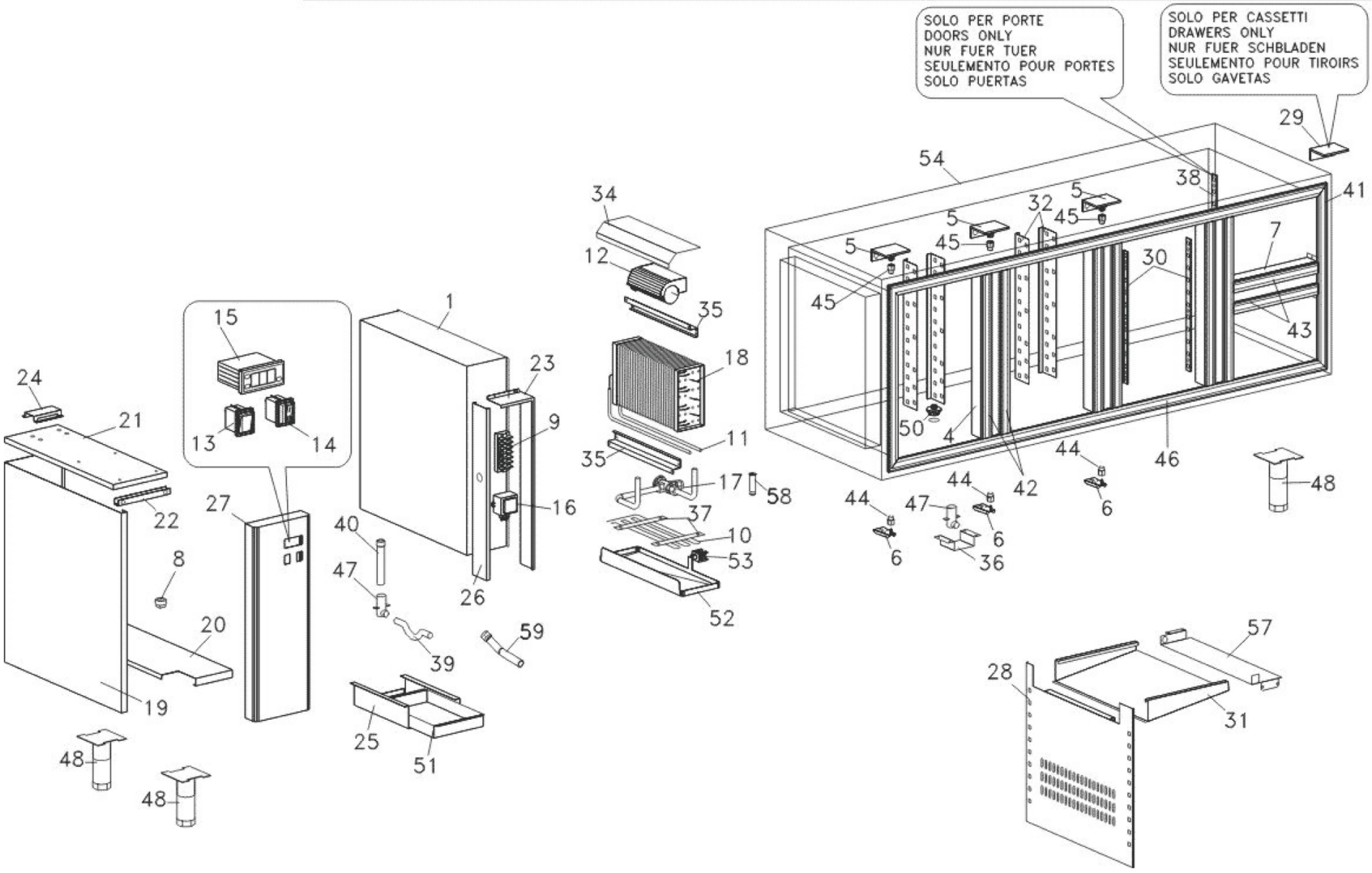

Modello Typ Model Modele Modelo

		WM1A WM1A/X WM1A/A	WM1A/2 WM1A/2X WM1A/2A	WM1B WM1B/X WM1B/A	WM1B/2 WM1B/2X WM1B/2A	WM1B/4 WM1B/4X WM1B/4A	WM1C WM1C/X WM1C/A	WM1C/2 WM1C/2X WM1C/2A	WM1C/4 WM1C/4X WM1C/4A	WM1C/6 WM1C/6X WM1C/6A
Num. Cassetti Schublad Drawers Tiroirs Gabetas	1/2	---	2	---	2	4	---	2	4	6
	1/3	---	---	---	---	---	---	---	---	---
	2/3	---	---	---	---	---	---	---	---	---

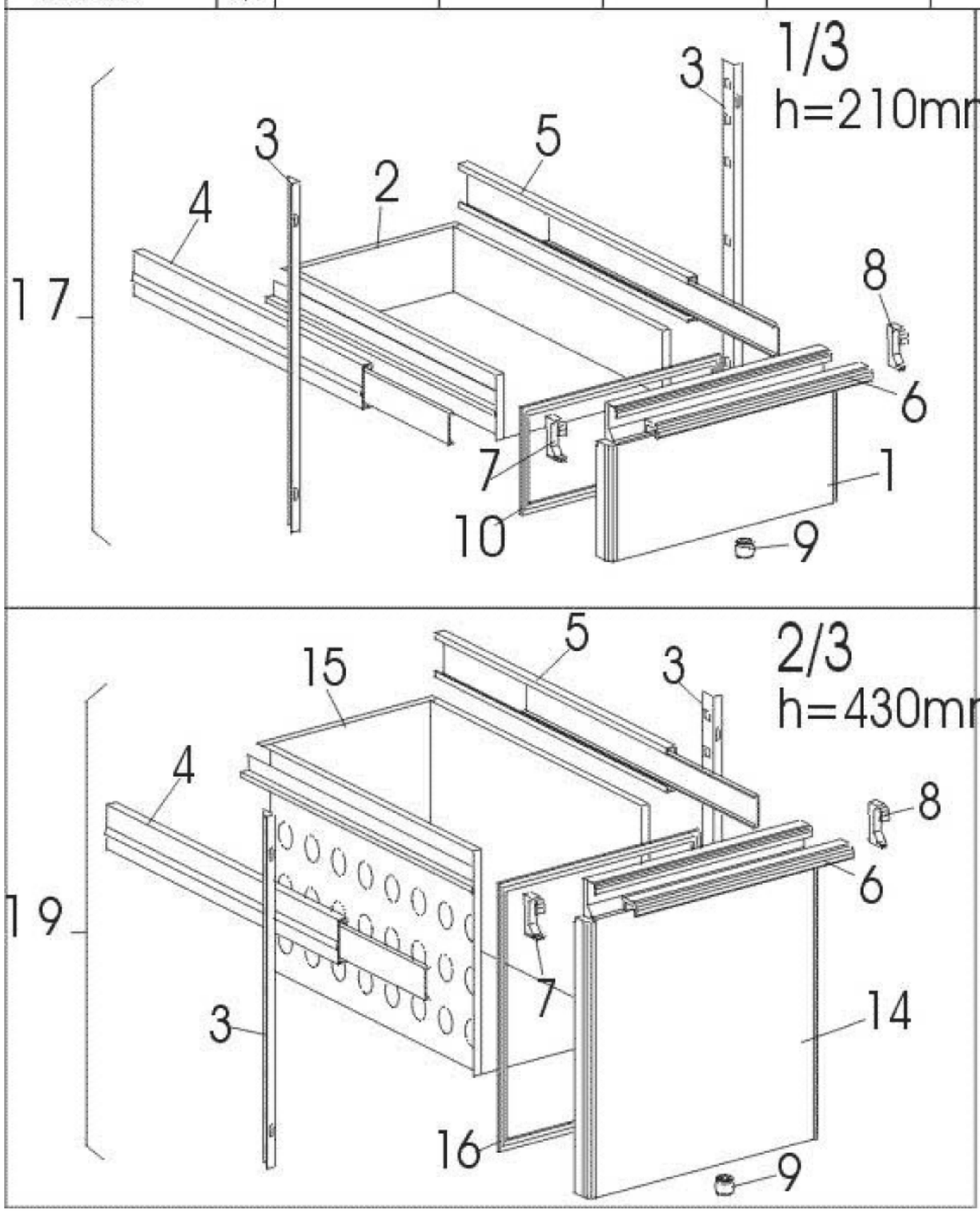

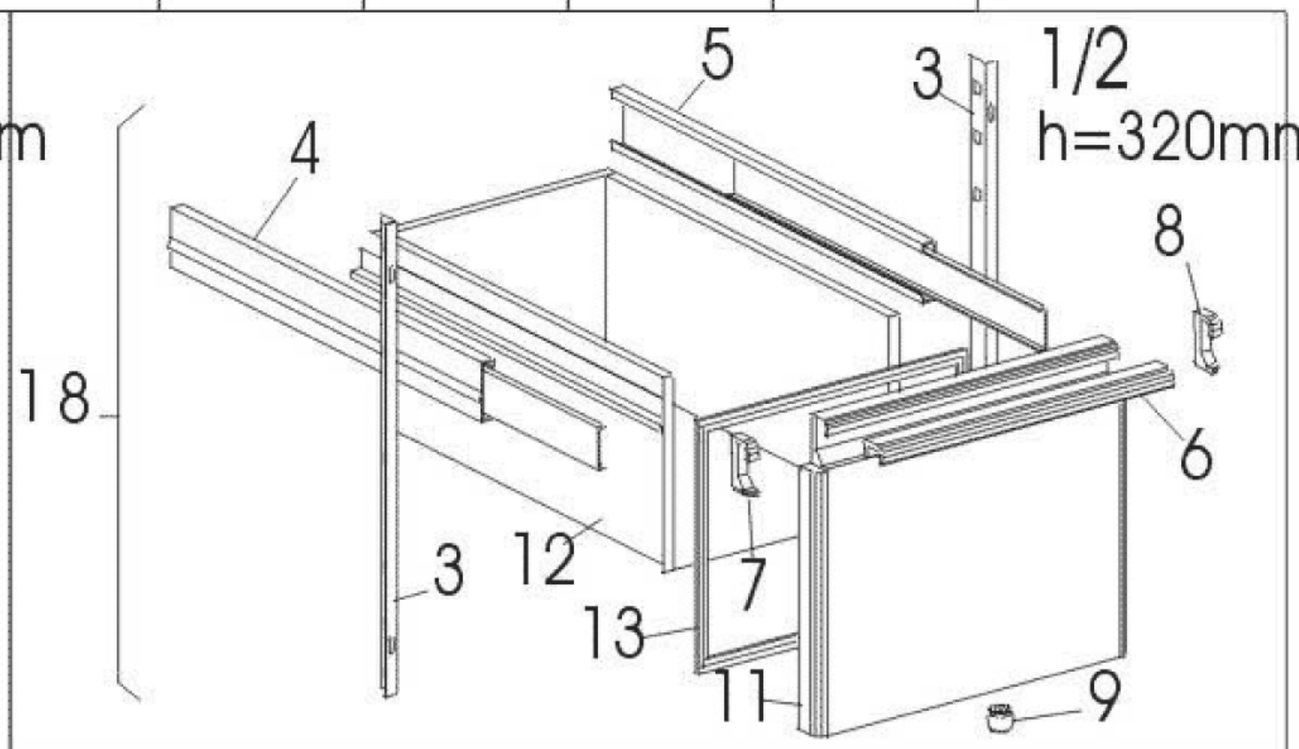

Modello Typ Model Modele Modelo

		WM1A WM1A/X WM1A/A	WM1A/2 WM1A/2X WM1A/2A	WM1B WM1B/X WM1B/A	WM1B/2 WM1B/2X WM1B/2A	WM1B/4 WM1B/4X WM1B/4A	WM1C WM1C/X WM1C/A	WM1C/2 WM1C/2X WM1C/2A	WM1C/4 WM1C/4X WM1C/4A	WM1C/6 WM1C/6X WM1C/6A
Porte Ture Doors Portes Portas Gabetas	SX	1	1	2	2	1	3	3	2	1
	DX	1	---	1	---	---	1	---	---	---

