DESPIECE TECNICO

# Hornos Mixtos
# Fours Mixtes
# Combi Ovens
# HeiBluftdämpfer
# Forno Misti

## SERIE "EVOLUTION"

**Modelos:**

**HEM-20/21**

***Enero 2007 January***

FAGOR

**Fagor Industrial**

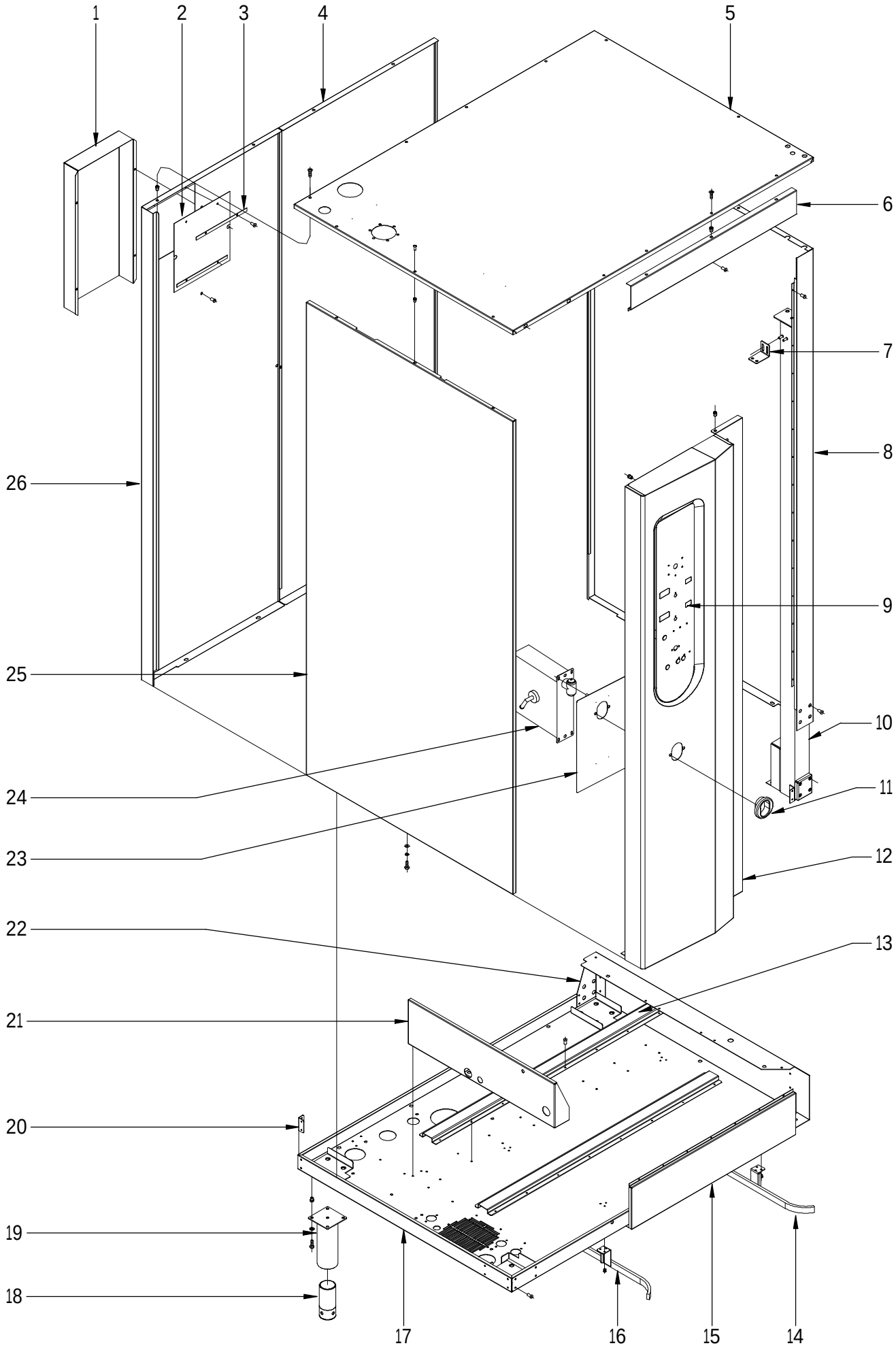


| N plano | Firma | Fecha | Aparato | MUEBLE | Lamina | |
|---|---|---|---|---|---|---|
| C-1779 | | 2007-01 | HORNO HEM 20/21 | | 1 | Fagor Industrial S.Coop. FAGOR Onate |

| MOD. | HORNOS | ZONA | MUEBLE | PLANO | C-1779 |
|---|---|---|---|---|---|

| ITEM | CODIGO | DENOMINACION | TEXTO | HEM 20/21 | | | | | | | NOTAS |
|---|---|---|---|---|---|---|---|---|---|---|---|
| 1 | T452814000 | CHAPA SEPARACION IPX5 20/21 | | 1 | | | | | | | |
| 2 | T452815000 | MALLA VENTILACION HEM 20/21 | | 1 | | | | | | | |
| 3 | T452816000 | CHAPA UNION MALLA 20/21 | | 2 | | | | | | | |
| 4 | T492848000 | PANEL POSTERIOR EXT. IZQ. 2021 | | 1 | | | | | | | |
| 5 | T452806000 | PANEL SUPERIOR EXTERIOR 2021 | | 1 | | | | | | | |
| | Q221342000 | REMACHE EXAGONAL M5 | | 13 | | | | | | | |
| | Q152004000 | TORNIL, APLASTADO M5x13 A304 | | 13 | | | | | | | |
| 6 | T302804000 | PANEL ANTERIOR SUPERIOR | | 1 | | | | | | | |
| | Q221343000 | REMACHE EXAGONAL M6 | | 16 | | | | | | | |
| | Q232040000 | ARANDELA A6 | | 16 | | | | | | | |
| | Q262040000 | ARAND.GROW. A6 A.304 | | 16 | | | | | | | |
| | Q012042000 | TORNILLO EXAGONAL M6x15 | | 16 | | | | | | | |
| 7 | T492825000 | ESCUADRA TUBO BISGRA | | 1 | | | | | | | |
| 8 | T492805000 | PANEL EXTERIOR DCHO. 20/21 | | 1 | | | | | | | |
| 9 | T323008000 | SERIGRAFIA HEM-10-11 10-21 | | 1 | | | | | | | |
| 10 | T492824000 | TUBO PORTABISAGRAS | | 1 | | | | | | | |
| | Q412002000 | REMACHE AVINOX Ø4x10mm | | 64 | | | | | | | |
| 11 | T452813000 | SOPORTE DUCHA | | 1 | | | | | | | |
| 12 | T452800000 | PANEL PORTAMANDOS COM 20/21 | | 1 | | | | | | | |
| | Q412005000 | REMACHE AVINOX Ø3,2x6mm | | 44 | | | | | | | |
| 13 | T302818000 | REFUERZO LONGITUDINAL BASE | | 2 | | | | | | | |
| 14 | T492820000 | GUIA CARRO COMPLETA DCHA. | | 1 | | | | | | | |
| 15 | T492817000 | PANEL FRONTAL INFERIOR | | 1 | | | | | | | |
| 16 | T492821000 | GUIA CARRO COMPLETA IZDA. | | 1 | | | | | | | |
| | Q412002000 | REMACHE AVINOX Ø4x10mm | | 8 | | | | | | | |
| 17 | T452820000 | BASE COMPLETA E-C-20/21 | | 1 | | | | | | | |
| | Q412006000 | REMACHE AVINOX Ø4x12mm | | 8 | | | | | | | |
| 18 | R142812000 | APOYO REGULABLE COMPLETO | | 4 | | | | | | | |
| | | | | | | | | | | | |
| | | | | | | | | | | | |
| | | | | | | | | | | | |

| MOD. | HORNOS | ZONA | MUEBLE | PLANO | C-1779 |
|---|---|---|---|---|---|

| ITEM | CODIGO | DENOMINACION | TEXTO | HEM 20/21 | | | | | | | NOTAS |
|---|---|---|---|---|---|---|---|---|---|---|---|
| 19 | R142808000 | PORTA APOYO COMPLETO | | 4 | | | | | | | |
| | Q221343000 | REMACHE EXAGONAL M6 | | 16 | | | | | | | |
| | Q242040000 | ARANDELA ABANICO A6 A.304 | | 16 | | | | | | | |
| | Q012042000 | TORNILLO EXAGONAL M6x15 | | 16 | | | | | | | |
| 20 | T302837000 | CANTONERA BASE 10/21 | | 2 | | | | | | | |
| 21 | T322808000 | APOYO CUERPO HORNO | | 1 | | | | | | | |
| 22 | T302816000 | REF APOYO BASE POST 10/21 | | 1 | | | | | | | |
| 23 | T452812000 | CHAPA DUCHA COMPLETA | | 1 | | | | | | | |
| 24 | T452809000 | DUCHA | | 1 | | | | | | | |
| 25 | T452807000 | PANEL EXTERIOR IZDO. E 2021 | | 1 | | | | | | | |
| 26 | T452817000 | PANEL POST. DER. HGC-E 2021 | | 1 | | | | | | | |

N.plano C-1780

Firma

Fecha 2007-01

Aparato HORNO HEM 20/21

PUERTA

Lamina 2

Fagor Industrial S.Coop. Oñate

FAGOR

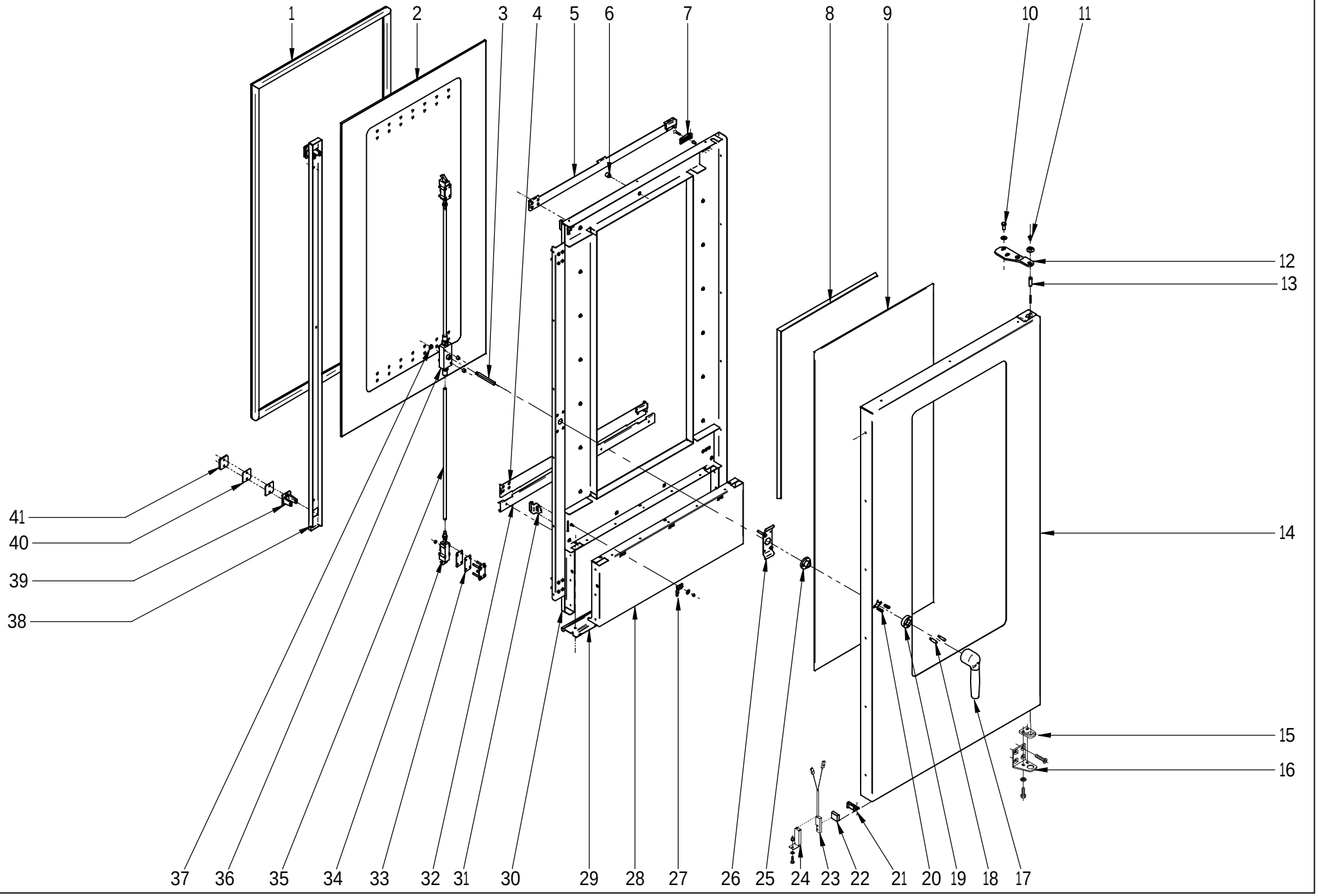

| MOD. | HORNOS | ZONA | PUERTA | PLANO | C-1780 |
|---|---|---|---|---|---|

| ITEM | CODIGO | DENOMINACION | TEXTO | HEM 20/21 | | | | | | | NOTAS |
|---|---|---|---|---|---|---|---|---|---|---|---|
| | **1100003116** | **KIT PUERTA COMPLETA** | | **1** | | | | | | | |
| | | | | | | | | | | | |
| 1 | T490500000 | JUNTA PUERTA 20/21 | | 1 | | | | | | | |
| **2** | **1100003117** | **KIT CRISTAL INTER. 20/21 COMPL.** | | **1** | | | | | | | |
| 3 | T490519000 | EJE DE MANILLA PUERTA | | 1 | | | | | | | |
| 4 | T490517000 | BISAGRA INFERIOR COMP. 20/21 | | 1 | | | | | | | |
| 5 | T300511000 | BISAGRA SUPER COMP 10/21 | | 1 | | | | | | | |
| 6 | T300513000 | TOPE CRISTAL INTERIOR 10/21 | | 14 | | | | | | | |
| 7 | R670615000 | BASE DE BISAGRA | | 2 | | | | | | | |
| | Q222011000 | REMACHE EXAGONAL M.5 | | 2 | | | | | | | |
| | Q042032000 | TORNILLO AVELLANADO M5X15 | | 2 | | | | | | | |
| 8 | 3715200000 | JUNTA CRISTAL | | 1 | | | | | | | |
| | Q412002000 | REMACHE AVINOX Ø4x10mm | | 30 | | | | | | | |
| 9 | T490505000 | CRISTAL EXTERIOR 20/21 | | 1 | | | | | | | |
| 10 | Q012053000 | TORNILLO EXAGONAL M8X20 A304 | | 3 | | | | | | | |
| | Q302025000 | ARANDELA Ø 8.4X20X1.5 | | 3 | | | | | | | |
| | Q242050000 | ARANDELA ABANICO A8 A.304 | | 3 | | | | | | | |
| 11 | Q012042000 | TORNILLO EXAGONAL M6X15 | | 1 | | | | | | | |
| | R662807000 | ARANDELA AMARRE | | 1 | | | | | | | |
| | Q242040000 | ARANDELA ABANICO A6 A.304 | | 1 | | | | | | | |
| 12 | T300520500 | BISAGRA SUPERIOR PLEGADA | | 1 | | | | | | | |
| 13 | R660534000 | EJE SUPERIOR | | 1 | | | | | | | |
| | Z850519000 | RESORTE 06329 | | 1 | | | | | | | |
| 14 | T450525000 | PUERTA COMPLETA 20/21 | | 1 | | | | | | | |
| 15 | R660549000 | GUIA EJE INFERIOR FUNDIDO | | 1 | | | | | | | |
| 16 | T300521500 | BISAGRA INFERIOR | | 1 | | | | | | | |
| | Q012091000 | TORN. EXAG. M6X12 INOX DIN933 | | 2 | | | | | | | |
| | Q242040000 | ARANDELA ABANICO A6 A.304 | | 2 | | | | | | | |
| | Q062040000 | TORN.AVELL.M6X16 | | 4 | | | | | | | |
| | | | | | | | | | | | |
| | | | | | | | | | | | |

| MOD. | HORNOS | ZONA | PUERTA | PLANO | C-1780 |
|---|---|---|---|---|---|

| ITEM | CODIGO | DENOMINACION | TEXTO | HEM 20/21 | | | | | | | NOTAS |
|---|---|---|---|---|---|---|---|---|---|---|---|
| 17 | T130502000 | MANILLA COMPLETA | | 1 | | | | | | | |
| | Q032032000 | TORNILLO ALOMADO M5X15 | | 2 | | | | | | | |
| | Q271033000 | ARANDELA DE SEGURIDAD 6 | | 1 | | | | | | | |
| | Q132042000 | VARILLA ROSCADA M6X15 | | 1 | | | | | | | |
| | T130510000 | TAPON Ø 16 BAGAL Ext. | | 1 | | | | | | | |
| 18 | T490518000 | PITON ENGANCHE PUERTA | | 2 | | | | | | | |
| 19 | T130514000 | SOPORTE RESORTE | | 1 | | | | | | | |
| 20 | T130506000 | RESORTE 34548 | | 2 | | | | | | | |
| 21 | T300525000 | SOPORTE IMAN | | 1 | | | | | | | |
| | Q222011000 | REMACHE EXAGONAL M.5 | | 1 | | | | | | | |
| | Q032031000 | TORNILLO ALOMADO M5X10 | | 1 | | | | | | | |
| 22 | T300526000 | IMAN | | 1 | | | | | | | |
| 23 | Z100522000 | INTERRUPTOR MAGNETICO | | 1 | | | | | | | |
| 24 | T302819000 | SOPORTE MICRO PUERTA | | 1 | | | | | | | |
| | Q222011000 | REMACHE EXAGONAL M.5 | | 1 | | | | | | | |
| | Q242030000 | ARANDELA ABANICO A5 A.304 | | 1 | | | | | | | |
| | Q152004000 | TO.APLAST.M5X13 A 304 | | 1 | | | | | | | |
| 25 | T130515000 | GUIA MANILLA | | 1 | | | | | | | |
| 26 | T130511000 | SUPLEMENTO SUJ. CERRADURA | | 1 | | | | | | | |
| 27 | R670612000 | BASE DE PESTILLO | | 2 | | | | | | | |
| | Q302022000 | ARANDELA 16X6X1.2 A.304 | | 2 | | | | | | | |
| | Q162030000 | TUERCA EXAGONAL M5 | | 2 | | | | | | | |
| | Q242030000 | ARANDELA ABANICO A5 A.304 | | 2 | | | | | | | |
| 28 | T450522000 | CHAPA AMARRE CONTRAPUERTA | | 1 | | | | | | | |
| 29 | T450511000 | SUPERIOR CIERRE PUERTA | | 1 | | | | | | | |
| 30 | T450523000 | CONTRAPUERTA 20/21 | | 1 | | | | | | | |
| 31 | T300514000 | PESTILLO | | 2 | | | | | | | |
| | R660605000 | MUELLE TENSOR | | 2 | | | | | | | |
| 32 | T490512000 | CHAPA JUNTA CONTRAPUERTA | | 1 | | | | | | | |
| | T450530000 | JUNTA CIERRE INFERIOR | | 1 | | | | | | | |
| | | | | | | | | | | | |

| MOD. | HORNOS | ZONA | PUERTA | PLANO | C-1780 |
|---|---|---|---|---|---|

| ITEM | CODIGO | DENOMINACION | TEXTO | HEM 20/21 | | | | | | | NOTAS |
|---|---|---|---|---|---|---|---|---|---|---|---|
| 33 | T080503000 | SUPLEMENTO ELEMENTO CIERRE | | 10 | | | | | | | |
| | Q152056000 | TORNILLO EXAGONAL M5X35 | | 8 | | | | | | | |
| 34 | T080504000 | ELEMENTO CIERRE | | 2 | | | | | | | |
| | Q162030000 | TUERCA EXAGONAL M5 | | 10 | | | | | | | |
| | Q242030000 | ARANDELA ABANICO A5 A.304 | | 10 | | | | | | | |
| 35 | T490506000 | TUBO ALARGADERA | | 2 | | | | | | | |
| 36 | T130509000 | MECANISMO DE CIERRE | | 1 | | | | | | | |
| | Z608410000 | CASQUILLO AMARRE TECLADO | | 2 | | | | | | | |
| | Q352001000 | PASADOR DE ALETAS 2X20 S | | 4 | | | | | | | |
| | Q262040000 | ARANDELA GROW. A6 A.304 | | 2 | | | | | | | |
| | Q162040000 | TUERCA EXAGONAL M6 | | 2 | | | | | | | |
| 37 | T130505000 | CASQUILLO | | 1 | | | | | | | |
| 38 | T490503000 | TAPA CIERRE PUERTA 20/21 | | 1 | | | | | | | |
| | Q032021000 | TORNILLO ALOMADO M4X10 | | 2 | | | | | | | |
| 39 | T110506000 | ENGANCHE PUERTA | | 2 | | | | | | | |
| | Q043145000 | TORN. AVELLANADO 6X30 LATON | | 4 | | | | | | | |
| 40 | R660538000 | CALZO DE ENGANCHE | | 4 | | | | | | | |
| 41 | T300519000 | SUPLEMENTO ENGANCHE | | 2 | | | | | | | |
| | | | | | | | | | | | |
| | | | | | | | | | | | |
| | | | | | | | | | | | |
| | | | | | | | | | | | |
| | | | | | | | | | | | |
| | | | | | | | | | | | |
| | | | | | | | | | | | |
| | | | | | | | | | | | |
| | | | | | | | | | | | |
| | | | | | | | | | | | |
| | | | | | | | | | | | |
| | | | | | | | | | | | |
| | | | | | | | | | | | |

N.plano
C-1781

Firma

Fecha
2007-01

Aparato
HORNO HEM 20/21

MUEBLE INTERIOR

Lamina
3

Fagor Industrial S.Coop.
Oñate

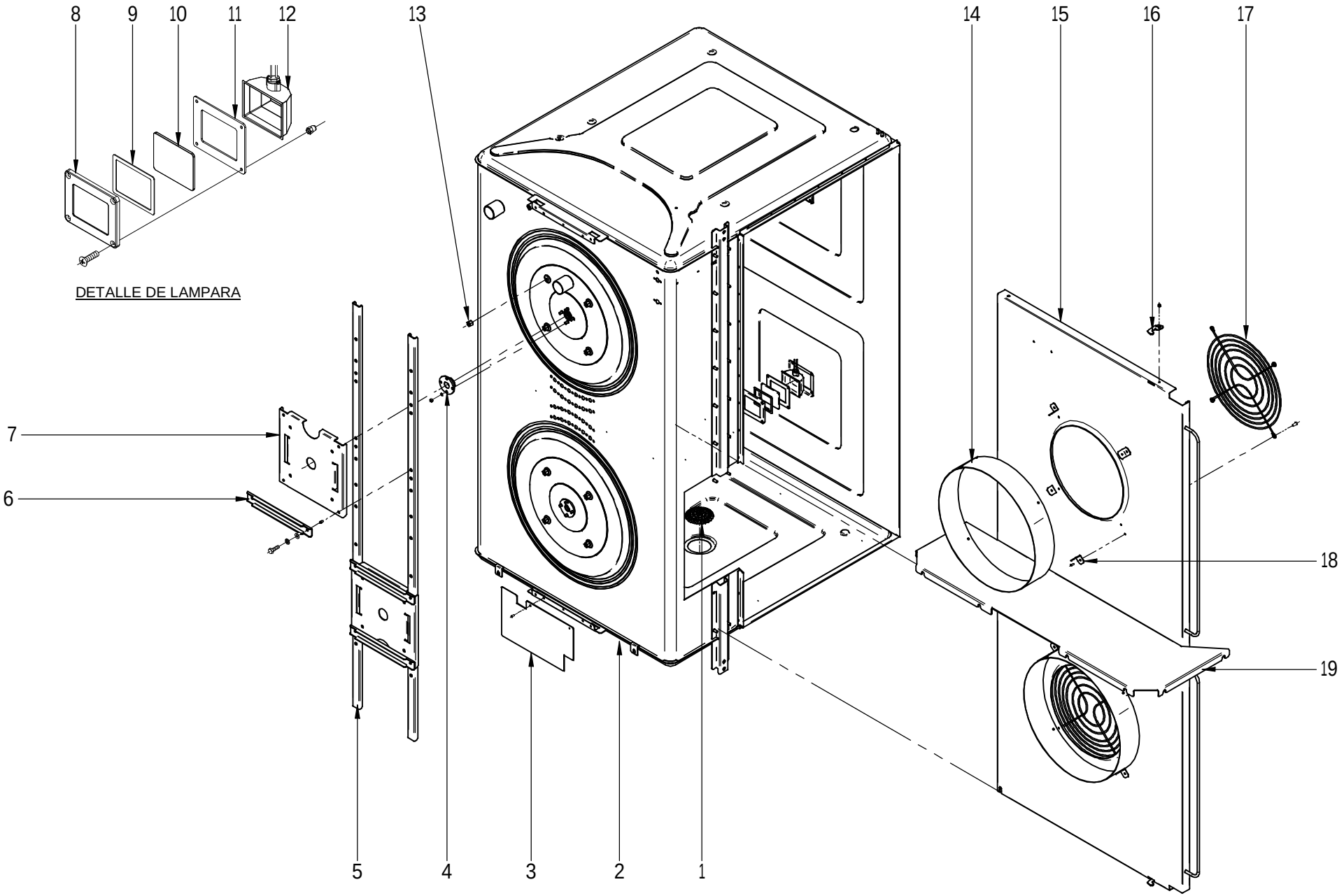

| MOD. | HORNOS | ZONA | MUEBLE INTERIOR | PLANO | C-1781 |
|---|---|---|---|---|---|

| ITEM | CODIGO | DENOMINACION | TEXTO | HEM 20/21 | | | | | | | NOTAS |
|---|---|---|---|---|---|---|---|---|---|---|---|
| 1 | T455030000 | FILTRO DESAGÜE D70 20/21 | | 1 | | | | | | | |
| | Q232030000 | ARANDELA A5 | | 2 | | | | | | | |
| | Q242030000 | ARANDELA ABANICO A5 A.304 | | 2 | | | | | | | |
| | Q162030000 | TUERCA EXAGONAL M5 | | 2 | | | | | | | |
| 2 | T452600000 | CUERPO COMPLETO HMM-20/21 | | 1 | | | | | | | |
| 3 | T453007000 | CHAPA PROTECCION BOMBA 2021 | | 1 | | | | | | | |
| | Q412002000 | REMACHE AVINOX Ø4x10mm | | 2 | | | | | | | |
| 4 | T302629000 | CASQUILLO RETEN | | 2 | | | | | | | |
| | Q302023000 | ANILLO DE SEGURIDAD D 28X1.2 | | 2 | | | | | | | |
| | Q262040000 | ARAND.GROW. A6 A.304 | | 8 | | | | | | | |
| | Q162040000 | TUER.EXA.M6 | | 8 | | | | | | | |
| 5 | T492606000 | PERFIL SOPORTE MOTOR 2021 | | 2 | | | | | | | |
| 6 | T302649000 | REFUERZO MOTOR | | 3 | | | | | | | |
| | Q262040000 | ARAND.GROW. A6 A.304 | | 6 | | | | | | | |
| | Q012042000 | TORNILLO EXAGONAL M6x15 | | 6 | | | | | | | |
| 7 | T302627000 | SOPORTE MOTOR | | 2 | | | | | | | |
| 8 | T303047000 | MARCO LAMPARA | | 2 | | | | | | | |
| | R663013000 | LAMPARA 10W-12V | | 2 | | | | | | | |
| | Q222041000 | REMACHE EXAGONAL M.4 INOX | | 8 | | | | | | | |
| | Q032021000 | TORNILLO ALOMADO M4X10 | | 8 | | | | | | | |
| 9 | T303027000 | JUNTA INTERIOR LAMPARA | | 2 | | | | | | | |
| 10 | T303025000 | CRISTAL LAMPARA | | 2 | | | | | | | |
| 11 | T303026000 | JUNTA EXTERIOR LAMPARA | | 2 | | | | | | | |
| 12 | T303023000 | PORTALAMPARAS | | 2 | | | | | | | |
| 13 | T302638000 | DISTANCIADOR MOTOR | | 8 | | | | | | | |
| | Q012056000 | TORNILLO EXAGONAL M8X40 | | 8 | | | | | | | |
| | Q242050000 | ARANDELA ABANICO A8 A.304 | | 8 | | | | | | | |
| | Q162050000 | TUERCA EXAGONAL M8X1 INOX | | 8 | | | | | | | |
| 14 | T322603000 | SUPLEMENTO CUBREVENTILAD. | | 2 | | | | | | | |
| | Q302022000 | ARANDELA 16X6X1.2 A.304 | | 4 | | | | | | | |
| | Q162030000 | TUERCA EXAGONAL M5 | | 4 | | | | | | | |

| MOD. | HORNOS | ZONA | MUEBLE INTERIOR | PLANO | C-1781 |
|---|---|---|---|---|---|

| ITEM | CODIGO | DENOMINACION | TEXTO | HEM 20/21 | | | | | | | NOTAS |
|---|---|---|---|---|---|---|---|---|---|---|---|
| 15 | T452604000 | CUBREVENTILADOR COMP. 2021E | | 1 | | | | | | | |
| 16 | T302635000 | ENGANCHE CUBREVENTILADOR | | 2 | | | | | | | |
| | Q412002000 | REMACHE AVINOX Ø4x10mm | | 2 | | | | | | | |
| 17 | R662661000 | PROTECCION DE TURBINA | | 2 | | | | | | | |
| 18 | T302643000 | FIJACIÓN SUPLEMENTO | | 8 | | | | | | | |
| | Q412002000 | REMACHE AVINOX Ø4x10mm | | 8 | | | | | | | |
| 19 | T452605000 | CHAPA REFUERZO CUBA E20/21 | | 1 | | | | | | | |
| | T302650000 | AISLANTE 970X850X20 | | 3 | | | | | | | |
| | T492621000 | AISLANTE 1550X850X20 | | 3 | | | | | | | |
| | T452607000 | AISLANTE 780X1230X10 E | | 1 | | | | | | | |
| | T452610000 | AISLANTE 800X1230X10 | | 1 | | | | | | | |
| | T452608000 | AISLANTE 610X160X10 | | 1 | | | | | | | |
| | T452609000 | AISLANTE 1680x120x10 | | 1 | | | | | | | |
| | T492624000 | AISLANTE 1680x30x10 | | 1 | | | | | | | |
| | T302667000 | ARANDELA SUJECCION AISLANTE | | 25 | | | | | | | |
| | Q221026000 | CLIP SUJECIÓN RÁPIDA Ø-4 | | 25 | | | | | | | |
| | | | | | | | | | | | |
| | | | | | | | | | | | |
| | | | | | | | | | | | |
| | | | | | | | | | | | |
| | | | | | | | | | | | |
| | | | | | | | | | | | |
| | | | | | | | | | | | |
| | | | | | | | | | | | |
| | | | | | | | | | | | |
| | | | | | | | | | | | |
| | | | | | | | | | | | |
| | | | | | | | | | | | |
| | | | | | | | | | | | |
| | | | | | | | | | | | |
| | | | | | | | | | | | |

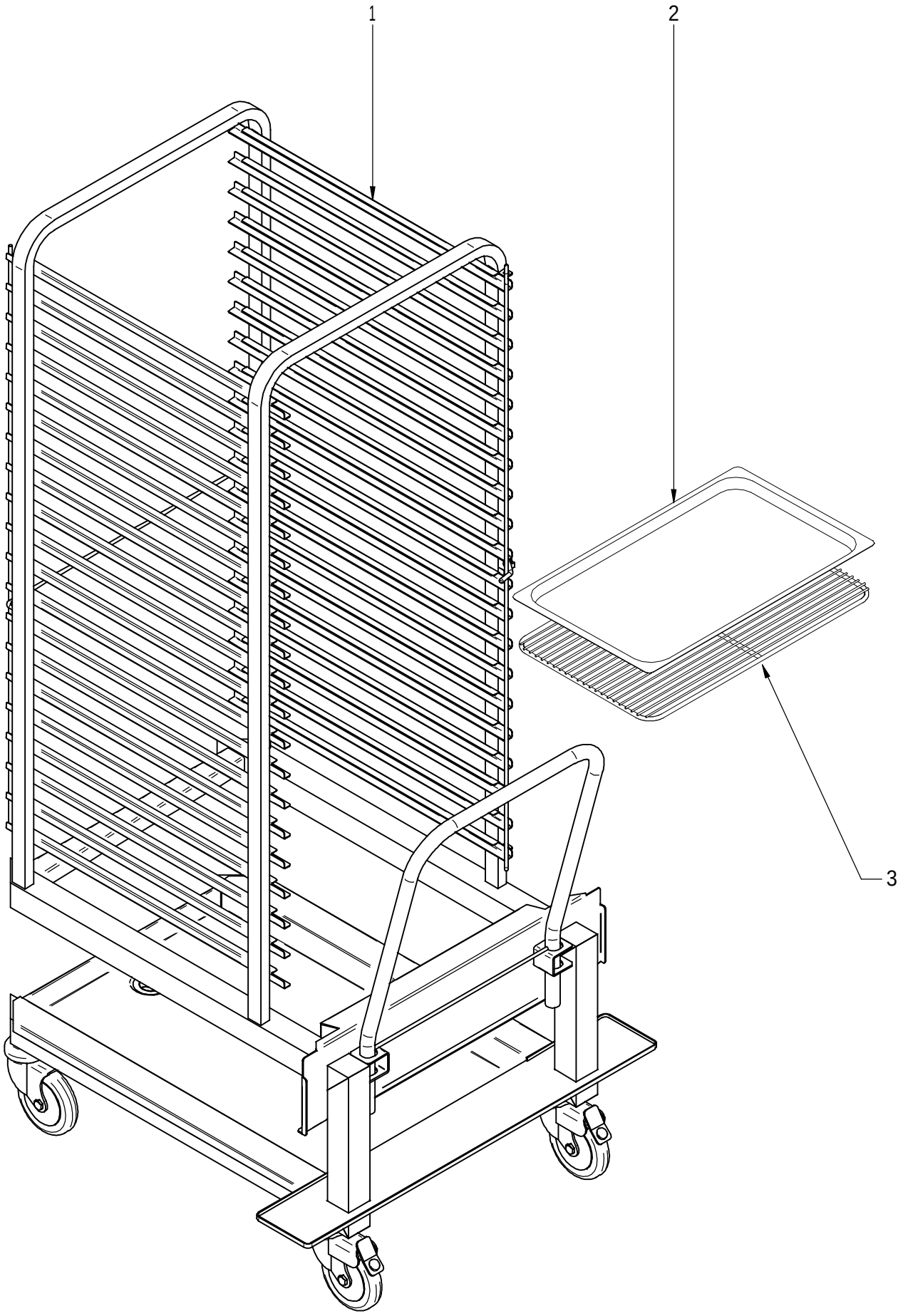


| N plano | Firma | Fecha | Aparato | CARRO | Lamina | |
|---|---|---|---|---|---|---|
| C-1782 | | 2007-01 | HORNO HEM 20/21 | | 4 | Fagor Industrial S.Coop. FAGOR Onate |

| MOD. | HORNOS | ZONA | CARRO | PLANO | C-1782 |
|---|---|---|---|---|---|

| ITEM | CODIGO | DENOMINACION | TEXTO | HEM 20/21 | | | | | | | NOTAS |
|---|---|---|---|---|---|---|---|---|---|---|---|
| 1 | T492823000 | CARRO 20/21 | | 1 | | | | | | | |
| | T492853000 | CODO DESAGÜE CARRO 20/21 | | 1 | | | | | | | |
| 2 | R032605000 | CUBETA 530x650 400 MM. 2x1 | | 1 | | | | | | | |
| 3 | R682676000 | PARRILLA 2x1 REF. 2025200 | | 1 | | | | | | | |

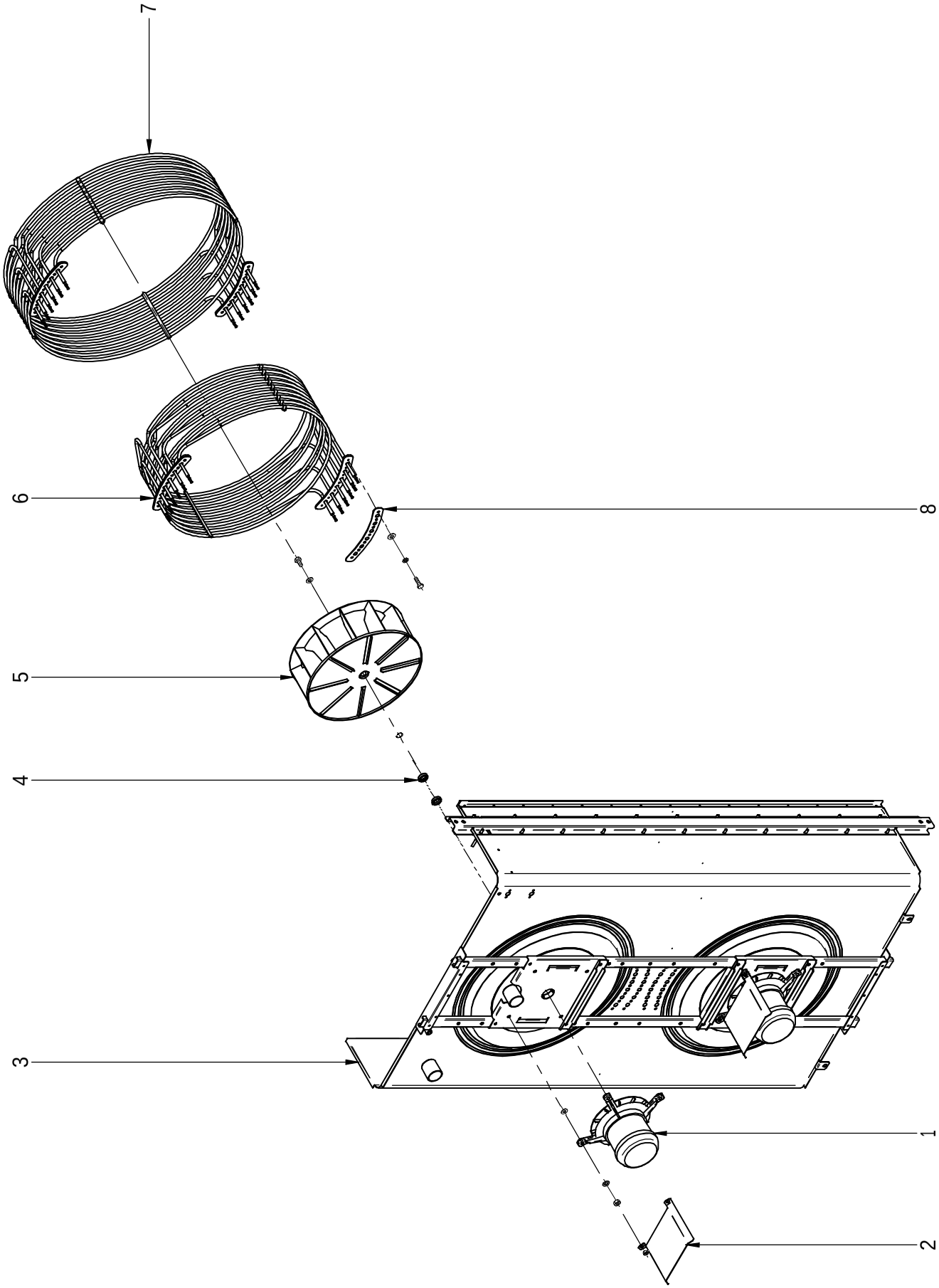


| N plano | Firma | Fecha | Aparato | | Lamina | |
|---|---|---|---|---|---|---|
| C-1783 | | 2007-01 | TURBINA<br>HORNO HEM 20/21 | | 5 | Fagor Industrial S.Coop.<br>Oñate |

| MOD. | HORNOS | ZONA | TURBINA | PLANO | C-1783 |
|---|---|---|---|---|---|

| ITEM | CODIGO | DENOMINACION | TEXTO | HEM 20/21 | | | | | | | NOTAS |
|---|---|---|---|---|---|---|---|---|---|---|---|
| 1 | T493003000 | MOTOR 20/21 2V 400V | | 2 | | | | | | | |
| 1 | T493004000 | MOTOR 20/21 2V 230V. | | 2 | | | | | | | |
| | R662685000 | JUNTA CASQUILLO RETEN | | 2 | | | | | | | |
| | Q242050000 | ARANDELA ABANICO A8 A.304 | | 8 | | | | | | | |
| | Q162050000 | TUERCA EXAGONAL M8x1 INOX. | | 8 | | | | | | | |
| 2 | T142635000 | TEJADILLO MOTOR | | 2 | | | | | | | |
| 3 | _____ | PANEL DE CUERPO DE HORNO | | 1 | | | | | | | |
| 4 | R662627000 | RETEN 17X28X7V | | 4 | | | | | | | |
| 5 | T493017000 | TURBINA RECTA D350X127 FIR | | 2 | | | | | | | |
| | R763010000 | ARANDELA SEGURIDAD HANNING | | 2 | | | | | | | |
| | Q012063000 | TORNIL. EXAGONAL M10X20 A.304 | | 2 | | | | | | | |
| 6 | T323034000 | RESISTENCIA INTERIOR 3X5 KW | | 2 | | | | | | | |
| 7 | T323035000 | RESISTENCIA EXTERIOR 3X5 KW | | 2 | | | | | | | |
| 8 | T323021000 | JUNTA RESISTENCIA | | 4 | | | | | | | |
| | Q012042000 | TORNILLO EXAGONAL M6x15 | | 28 | | | | | | | |
| | Q232040000 | ARANDELA A6 | | 28 | | | | | | | |
| | Q262040000 | ARAND.GROW. A6 A.304 | | 28 | | | | | | | |
| | Q162040000 | TUERCA EXAGONAL M6 | | 28 | | | | | | | |

N.plano
C-1784

Firma

Fecha
2007-01

Aparato
HORNO HEM 20/21

INTERIOR CHIMENEA

Lamina
6

Fagor Industrial S.Coop.
Oñate

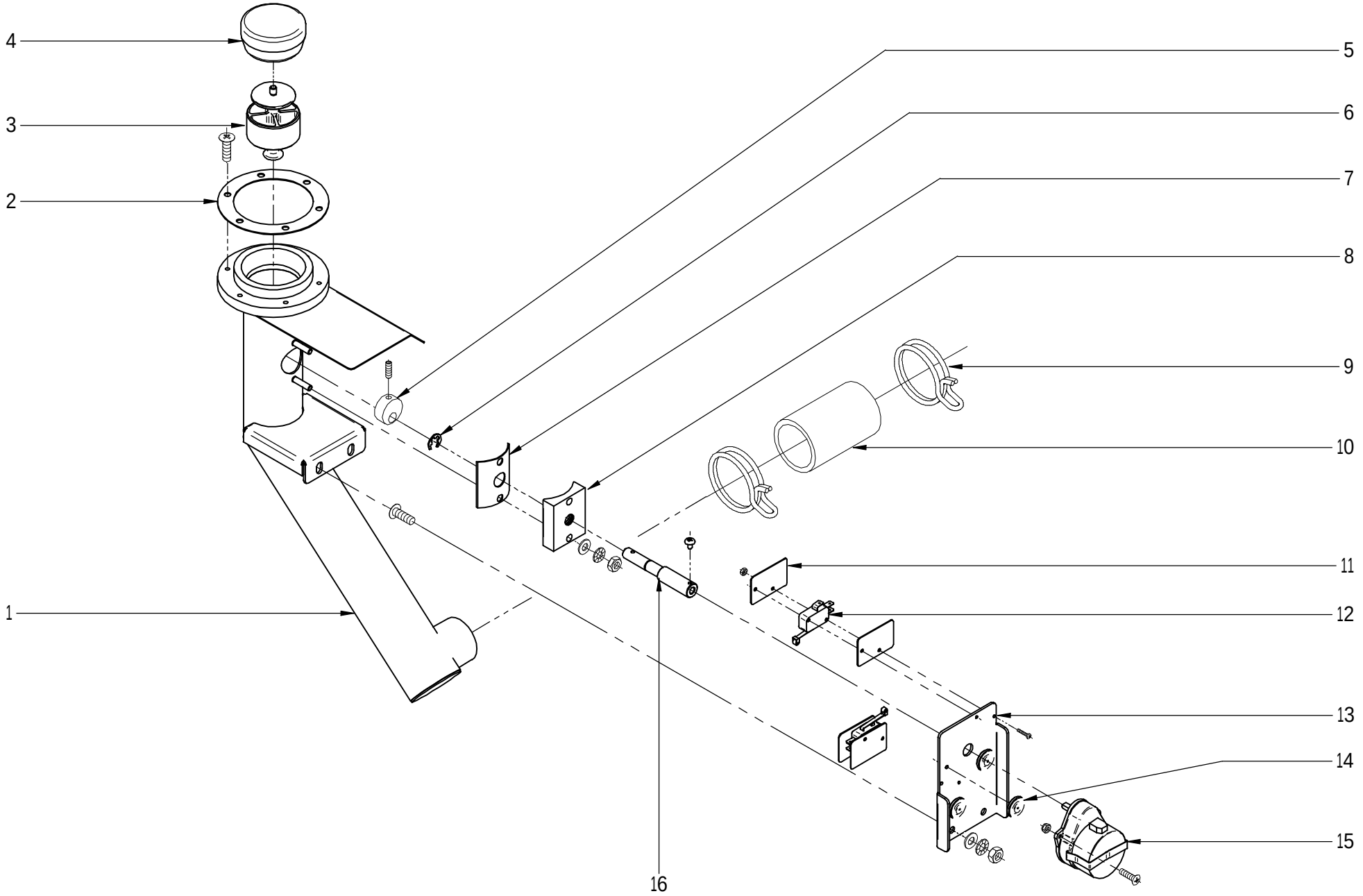

| MOD. | HORNOS | ZONA | INTERIOR CHIMENEA | PLANO | C-1784 |
|---|---|---|---|---|---|

| ITEM | CODIGO | DENOMINACION | TEXTO | HEM 20/21 | | | | | | | NOTAS |
|---|---|---|---|---|---|---|---|---|---|---|---|
| 1 | T455008000 | CONJUNTO CHIMENEA 20-21 E | | 1 | | | | | | | |
| 2 | T325057000 | JUNTA BASE CHIMENEA | | 1 | | | | | | | |
| | Q152004000 | TORNIL, APLASTADO M5x13 A304 | | 6 | | | | | | | |
| 3 | T325051000 | GUIA RETENCION VAPORES | | 1 | | | | | | | |
| 4 | T325055000 | RETENCION DE VAPOR | | 1 | | | | | | | |
| 5 | T325032000 | LEVA EJE CHIMENEA | | 1 | | | | | | | |
| 6 | Q271006000 | ARANDELA DE SEGURIDAD 8 | | 1 | | | | | | | |
| 7 | T325030000 | JUNTA EJE CHIMENEA | | 1 | | | | | | | |
| 8 | T325029000 | GUIA EJE CHIMENEA | | 1 | | | | | | | |
| 9 | Q901312000 | ABRAZADERA ELASTICA 50.6-53.2 | | 2 | | | | | | | |
| 10 | 3715800000 | TUBO SILICONA ALTA Tº Ø 43*51 | | 1 | | | | | | | |
| 11 | R010535000 | PLACA SEPARADORA | | 4 | | | | | | | |
| | Q032013000 | TORNILLO ALOMADO M3X20 | | 8 | | | | | | | |
| | Q221350000 | TUERCA AUTOBLOCANTE M3 | | 8 | | | | | | | |
| 12 | R010534000 | INTERRUPTOR PUERTA | | 2 | | | | | | | |
| 13 | T325033000 | ESCUADRA AMARRE MOTOR | | 1 | | | | | | | |
| | Q012042000 | TORNILLO EXAGONAL M6x15 | | 2 | | | | | | | |
| | Q232040000 | ARANDELA A6 | | 2 | | | | | | | |
| | Q262040000 | ARANDELA GROW. A6 A.304 | | 2 | | | | | | | |
| | Q162040000 | TUERCA EXAGONAL M6 | | 2 | | | | | | | |
| 14 | R675033000 | JUNTA PALANCA ACCIONAMIENTO | | 3 | | | | | | | |
| | Q042021000 | TORNIL. AVELLANADO M4X10 A304 | | 3 | | | | | | | |
| 15 | T323010000 | MOTOR CHIMENEA | | 1 | | | | | | | |
| 16 | T325031000 | EJE CHIMENEA | | 1 | | | | | | | |
| | Q151320000 | TOR. ALOMADO M4X6 H.ZINCADO | | 1 | | | | | | | |
| | | | | | | | | | | | |
| | | | | | | | | | | | |
| | | | | | | | | | | | |
| | | | | | | | | | | | |
| | | | | | | | | | | | |
| | | | | | | | | | | | |

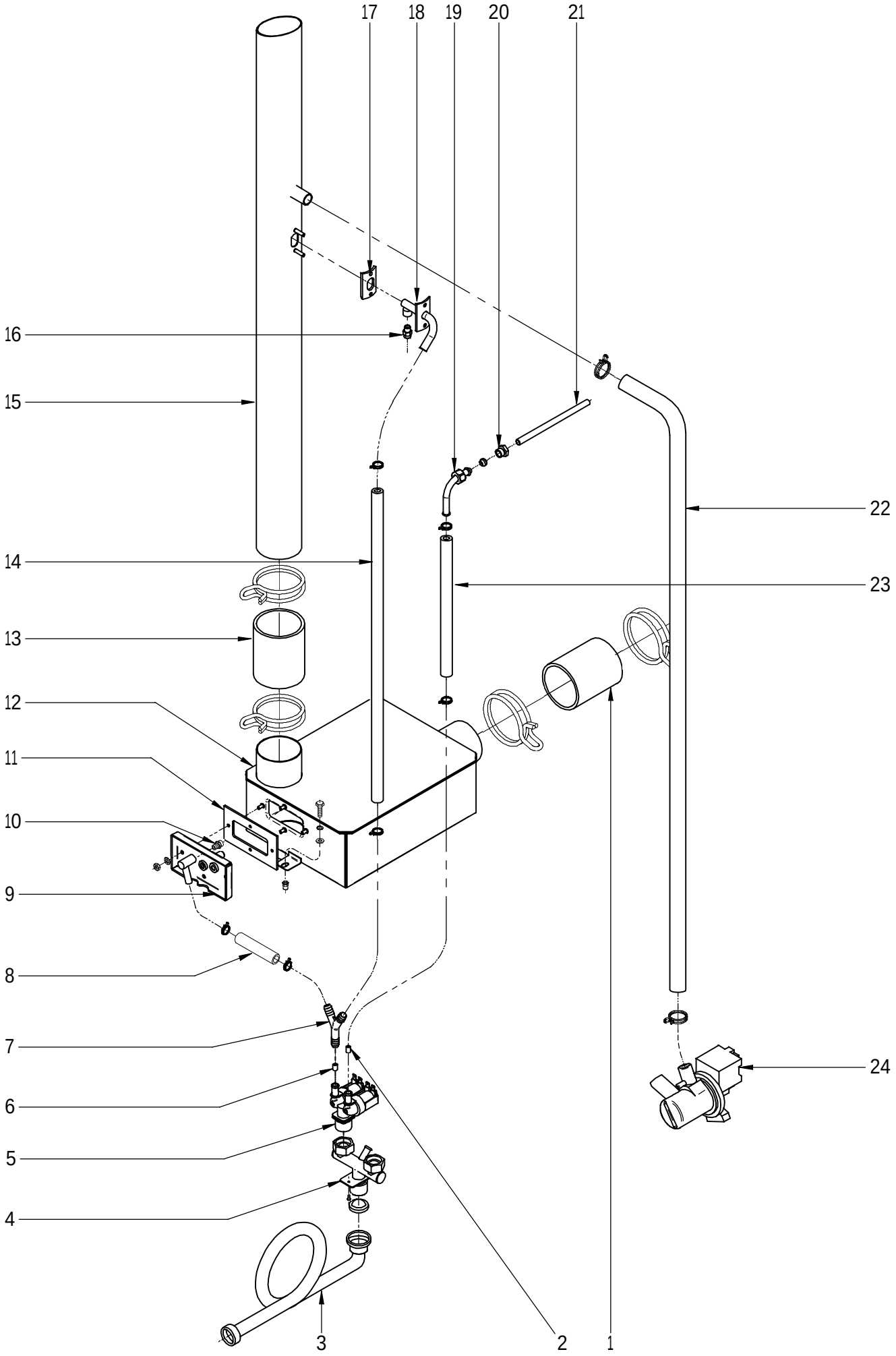


| N plano | Firma | Fecha | Aparato | | Lamina | |
|---|---|---|---|---|---|---|
| C-1785 | | 2007-01 | CIRCUITO DE AGUA<br>HORNO HEM 20/21 | | 7 | Fagor Industrial S.Coop. FAGOR<br>Onate |

| MOD. | HORNOS | ZONA | CIRCUITO DE AGUA | PLANO | C-1785 |
|---|---|---|---|---|---|

| ITEM | CODIGO | DENOMINACION | TEXTO | HEM 20/21 | | | | | | | NOTAS |
|---|---|---|---|---|---|---|---|---|---|---|---|
| 1 | T455029000 | TUBO EMPALME GENERADOR | | 1 | | | | | | | |
| | Q901313000 | ABRAZADERA ELASTICA 62-66 | | 2 | | | | | | | |
| 2 | P305013000 | REGULADOR 1L.AMA 255.005 | | 1 | | | | | | | |
| 3 | Z601114000 | MANGUERA ENTRADA AGUA | | 1 | | | | | | | |
| | Z701132000 | FILTRO DE JUNTA N-3 | | 1 | | | | | | | |
| 4 | T325063000 | ENTRADA AGUA COMPLETA | | 1 | | | | | | | |
| | Q012021000 | TORNILLO EXAGONAL M4x10 A304 | | 2 | | | | | | | |
| 5 | P255001000 | E.V. DOBLE CODIGO 255.481 | | 1 | | | | | | | |
| 6 | Z601156000 | REGULADOR 8L RO. 254.034 | | 1 | | | | | | | |
| 7 | Z201106000 | RACORD EN Y | | 1 | | | | | | | |
| 8 | 3676900000 | TUBO GOMA NEGRA Ø17*10 | | 1 | | | | | | | |
| | Q901310000 | ABRAZADERA ELASTICA 16.8-17.7 | | 2 | | | | | | | |
| 9 | T325075000 | FIJACIÓN SONDA COMPLETO | | 1 | | | | | | | |
| 10 | T115086000 | TOBERA 1/8 | | 1 | | | | | | | |
| | T115093000 | TAPON RAMA 12.1X1 | | 1 | | | | | | | |
| | Q242030000 | ARANDELA ABANICO A5 A.304 | | 2 | | | | | | | |
| | Q162030000 | TUERCA EXAGONAL M5 | | 2 | | | | | | | |
| 11 | T325066000 | JUNTA FIJACION SONDA | | 1 | | | | | | | |
| 12 | T455022000 | CAJÓN DESAGÜE COMP. 20/21 E | | 1 | | | | | | | |
| | Q221343000 | REMACHE EXAGONAL M6 | | 2 | | | | | | | |
| | Q232040000 | ARANDELA A6 | | 2 | | | | | | | |
| | Q262040000 | ARANDELA GROW. A6 A.304 | | 2 | | | | | | | |
| | Q012042000 | TORNILLO EXAGONAL M6x15 | | 2 | | | | | | | |
| 13 | T455029000 | TUBO EMPALME GENERADOR | | 1 | | | | | | | |
| | Q901313000 | ABRAZADERA ELASTICA 62-66 | | 2 | | | | | | | |
| 14 | 3676900000 | TUBO GOMA NEGRA Ø17*10 | | 1 | | | | | | | |
| | Q901310000 | ABRAZADERA ELASTICA 16.8-17.7 | | 2 | | | | | | | |
| 15 | T455006000 | CHIMENEA COMPLETA 20/21 E | | 1 | | | | | | | |
| | | | | | | | | | | | |
| | | | | | | | | | | | |
| | | | | | | | | | | | |

| MOD. | HORNOS | ZONA | CIRCUITO DE AGUA | PLANO | C-1785 |
|---|---|---|---|---|---|

| ITEM | CODIGO | DENOMINACION | TEXTO | HEM 20/21 | | | | | | | NOTAS |
|---|---|---|---|---|---|---|---|---|---|---|---|
| 16 | T115086000 | TOBERA 1/8 | | 1 | | | | | | | |
| | T115093000 | TAPON RAMA 12.1X1 | | 1 | | | | | | | |
| | Q242030000 | ARANDELA ABANICO A5 A.304 | | 2 | | | | | | | |
| | Q162030000 | TUERCA EXAGONAL M5 | | 2 | | | | | | | |
| 17 | R725159000 | JUNTA TUBO INYECTOR | | 1 | | | | | | | |
| 18 | T115112000 | CONDUCC. VAHOS COMPLETO | | 1 | | | | | | | |
| 19 | R695017000 | TUBO CONDUCCION AGUA | | 1 | | | | | | | |
| | R695004000 | BICONO | | 1 | | | | | | | |
| 20 | R695003000 | MANGUITO CIERRE | | 1 | | | | | | | |
| 21 | R665024000 | TUBO CONDUCCION INYECTOR | | 1 | | | | | | | |
| 22 | 3715600000 | TUBO SILICONA Ø26*18 | | 1 | | | | | | | |
| | Q901311000 | ABRAZAD. ELAST. 26.7-28.1 | | 2 | | | | | | | |
| 23 | 3676900000 | TUBO GOMA NEGRA Ø17*10 | | 1 | | | | | | | |
| | Q901310000 | ABRAZADERA ELASTICA 16.8-17.7 | | 2 | | | | | | | |
| 24 | Z220901000 | BOMBA DESAGUE 30W | | 1 | | | | | | | |
| 24 | Z223501000 | BOMBA DE DESAGUE 30W 60HZ | | 1 | | | | | | | |

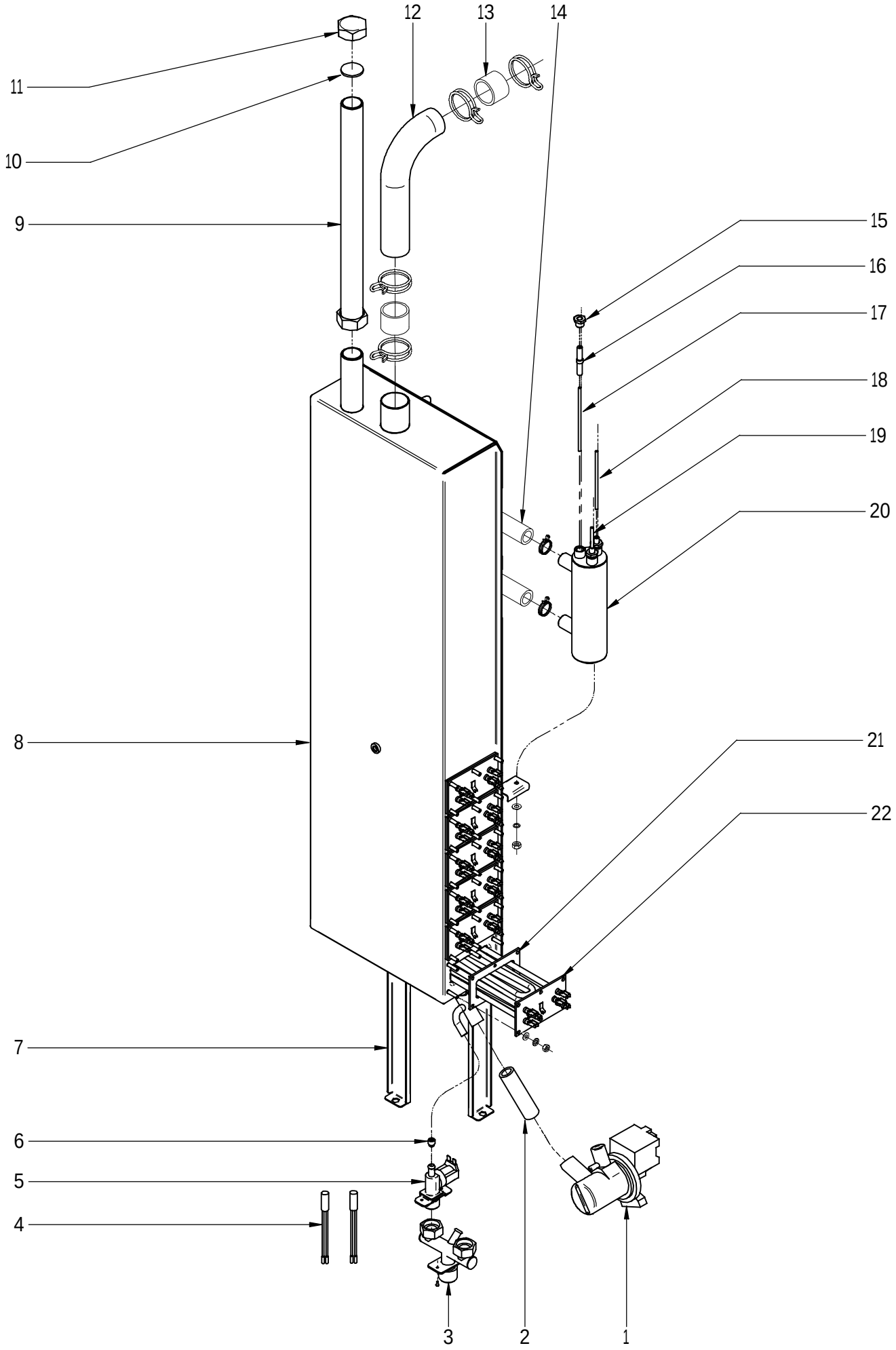


| N plano | Firma | Fecha | Aparato | Lamina | |
|---|---|---|---|---|---|
| C-1786 | | 2007-01 | CIRCUITO DE VAPOR<br>HORNO HEM 20/21 | 8 | Fagor Industrial S.Coop. FAGOR<br>Onate |

| MOD. | HORNOS | ZONA | CIRCUITO DE VAPOR | PLANO | C-1786 |
|---|---|---|---|---|---|

| ITEM | CODIGO | DENOMINACION | TEXTO | HEM 20/21 | | | | | | | NOTAS |
|---|---|---|---|---|---|---|---|---|---|---|---|
| 1 | Z220901000 | BOMBA DESAGUE 30W | | 1 | | | | | | | |
| 2 | 3715600000 | TUBO SILICONA Ø26*18 | | 1 | | | | | | | |
| | Q901311000 | ABRAZAD. ELAST. 26.7-28.1 | | 2 | | | | | | | |
| 3 | T325063000 | ENTRADA AGUA COMPLETA | | 1 | | | | | | | |
| | Q012021000 | TORNILLO EXAGONAL M4x10 A304 | | 2 | | | | | | | |
| 4 | Z233012000 | CONDENSAD. ANTIPARASITARIO | | 2 | | | | | | | |
| 5 | Z701135000 | E.V.SIMPLE 0V COD.255.208 | | 1 | | | | | | | |
| 6 | Z601156000 | REGULADOR 8L RO. 254.034 | | 1 | | | | | | | |
| 7 | T455010000 | AMARRE GENERADOR 20-21 | | 2 | | | | | | | |
| | Q232040000 | ARANDELA A6 | | 2 | | | | | | | |
| | Q242040000 | ARANDELA ABANICO A6 A.304 | | 2 | | | | | | | |
| | Q162040000 | TUERCA EXAGONAL M6 | | 2 | | | | | | | |
| **8** | **1100003120** | **KIT GENERADOR VAPOR COMPL.** | | **1** | | | | | | | |
| | Q012042000 | TORNILLO EXAGONAL M6x15 | | 2 | | | | | | | |
| | Q232040000 | ARANDELA A6 | | 2 | | | | | | | |
| | Q262040000 | ARANDELA GROW. A6 A.304 | | 2 | | | | | | | |
| | Q162040000 | TUERCA EXAGONAL M6 | | 2 | | | | | | | |
| | T455024000 | AISLANTE GENERADOR 2021 E | | 1 | | | | | | | |
| | T455025000 | AISLANTE GENER. SUP. 2021 E | | 1 | | | | | | | |
| 9 | T455026000 | EMPALME DESINCRUSTANTE | | 1 | | | | | | | |
| 10 | R015011000 | ARANDELA 32 | | 1 | | | | | | | |
| 11 | R015010000 | TUERCA TAPON 1" | | 1 | | | | | | | |
| 12 | T455023000 | ENTRADA VAPOR HEM 20/21 | | 1 | | | | | | | |
| 13 | 3715800000 | TUBO SILICONA ALTA Tº Ø 43*51 | | 1 | | | | | | | |
| | Q901312000 | ABRAZADERA ELASTICA 50.6-53.2 | | 2 | | | | | | | |
| 14 | 3715600000 | TUBO SILICONA Ø26*18 | | 1 | | | | | | | |
| | Q901311000 | ABRAZAD. ELAST. 26.7-28.1 | | 2 | | | | | | | |
| 15 | R345058000 | RACORD | | 3 | | | | | | | |
| 16 | R345059000 | GUIA AISLANTE | | 3 | | | | | | | |
| 17 | R345063000 | ELECTRODO NIVEL BAJO | | 1 | | | | | | | |
| 18 | R345060000 | ELECTRODO NIVEL ALTO | | 1 | | | | | | | |

| MOD. | HORNOS | ZONA | CIRCUITO DE VAPOR | PLANO | C-1786 |
|---|---|---|---|---|---|

| ITEM | CODIGO | DENOMINACION | TEXTO | HEM 20/21 | | | | | | | NOTAS |
|---|---|---|---|---|---|---|---|---|---|---|---|
| 19 | R345064000 | ELECTRODO DE MASA | | 1 | | | | | | | |
| 20 | T325040000 | CUERPO NIVELES COMPLETO | | 1 | | | | | | | |
| | Q232040000 | ARANDELA A6 | | 1 | | | | | | | |
| | Q262040000 | ARANDELA GROW. A6 A.304 | | 1 | | | | | | | |
| | Q162040000 | TUERCA EXAGONAL M6 | | 2 | | | | | | | |
| 21 | T323007000 | JUNTA RESISTENCIA CALDERIN | | 6 | | | | | | | |
| 22 | T323006000 | RESISTENCIA 3x3000W 230V | | 6 | | | | | | | |
| | Q232030000 | ARANDELA A5 | | 36 | | | | | | | |
| | Q242030000 | ARANDELA ABANICO A5 A.304 | | 36 | | | | | | | |
| | Q162030000 | TUERCA EXAGONAL M5 | | 36 | | | | | | | |

| | |
|---|---|
| N.plano | C-1787 |
| Firma | |
| Fecha | 2007-01 |
| Aparato | HORNO HEM 20/21 |
| PARTE ELECTRICA PORTAMANDOS | |
| Lamina | 9 |

Fagor Industrial S.Coop.
Oñate

FAGOR

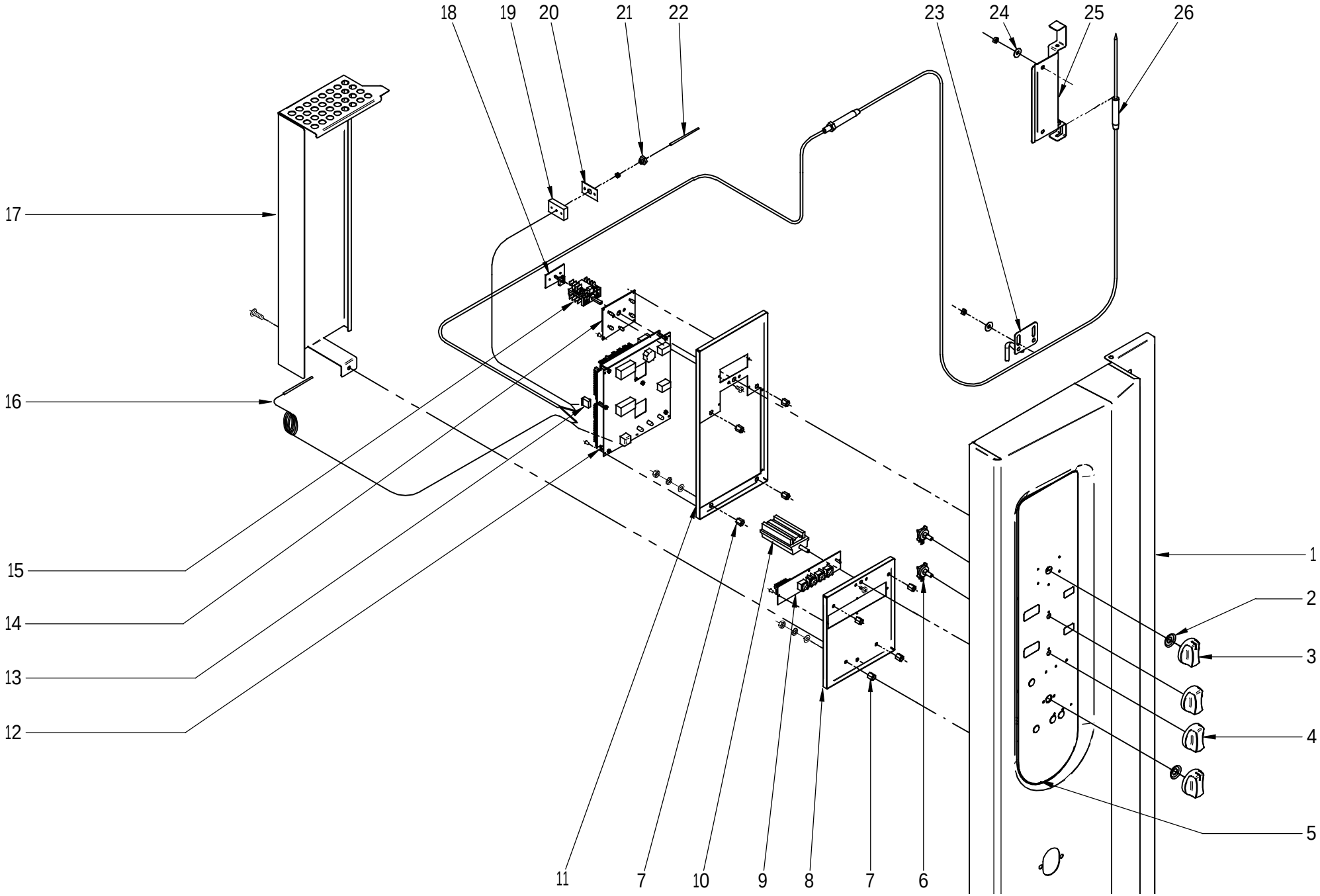

| MOD. | HORNOS | ZONA | PARTE ELECTRICA PORTAMANDOS | PLANO | C-1787 |
|---|---|---|---|---|---|

| ITEM | CODIGO | DENOMINACION | TEXTO | HEM 20/21 | | | | | | | NOTAS |
|---|---|---|---|---|---|---|---|---|---|---|---|
| 1 | T452800000 | PANEL PORTAMANDOS COM 20/21 | | 1 | | | | | | | |
| | Q412005000 | REMACHE AVINOX Ø3,2x6mm | | 44 | | | | | | | |
| 2 | R663046000 | JUNTA CONMUTADOR | | 2 | | | | | | | |
| 3 | T303010000 | BOTÓN DE MANDO COMPLETO | | 2 | | | | | | | |
| 4 | T303011000 | BOTÓN DE MANDO COMPLETO | | 2 | | | | | | | |
| 5 | T323008000 | SERIGRAFIA HEM-10-11 10-21 | | 1 | | | | | | | |
| 6 | T303022000 | SELECTOR ENCODER | | 2 | | | | | | | |
| | Z953041000 | TUERCA M.10x1 EGO 00.00600.075 | | 2 | | | | | | | |
| 7 | T302829000 | DISTANCIADOR COMPONENTES | | 8 | | | | | | | |
| 8 | T303021000 | SOPORTE CIRCUITOS | | 1 | | | | | | | |
| 9 | T303019000 | CIRCUITO TECLADO HGV | | 1 | | | | | | | |
| | R663036000 | FIJACION CIRCUITO | | 12 | | | | | | | |
| 10 | R663026000 | CONMUTADOR DE FUNCIONES | | 1 | | | | | | | |
| | Q151320000 | TORN.ALOMADO M4X6 H.ZINCADO | | 2 | | | | | | | |
| | Z602906000 | CASQUILLO | | 2 | | | | | | | |
| 11 | T302826000 | SOPORTE COMPONENTES | | 1 | | | | | | | |
| 12 | T303005000 | CONTROLADOR HGV-2003 | | 1 | | | | | | | |
| 13 | T303045000 | CONECTOR PASO 3,96 MM. 8 VIAS | | 1 | | | | | | | |
| 14 | T303018000 | CIRCUITO DE LEDS VISUALIZADOR | | 1 | | | | | | | |
| 15 | T303004000 | CONMUTADOR ACOPLE POTENC. | | 1 | | | | | | | |
| | Q151320000 | TORNILLO ALOMADO M4x6 | | 2 | | | | | | | |
| 16 | T323024000 | CONJUN. TERMOPAR VAPOR 10/21 | | 2 | | | | | | | |
| 17 | T303039000 | PROTECCION CIRCUITOS | | 1 | | | | | | | |
| | T323027000 | PTC ELECTROVALVULA 5 SEG | | 1 | | | | | | | |
| | Q242030000 | ARANDELA ABANICO A5 A.304 | | 1 | | | | | | | |
| | Q012031000 | TORNILLO EXAGONAL M5x10 A304 | | 1 | | | | | | | |
| | Q221342000 | REMACHE EXAGONAL M5 | | 1 | | | | | | | |
| 18 | T303020000 | CIRCUITO PONTECIOMETRO | | 1 | | | | | | | |
| 19 | T112625000 | BASE CIERRE SONDA | | 2 | | | | | | | |
| | | | | | | | | | | | |
| | | | | | | | | | | | |

| MOD. | HORNOS | ZONA | PARTE ELECTRICA PORTAMANDOS | PLANO | C-1787 |
|---|---|---|---|---|---|

| ITEM | CODIGO | DENOMINACION | TEXTO | HEM 20/21 | | | | | | | NOTAS |
|---|---|---|---|---|---|---|---|---|---|---|---|
| 20 | R692812000 | JUNTA PASAMUROS SIMPLE | | 2 | | | | | | | |
| | Q012021000 | TORNILLO EXAGONAL M4x10 A.304 | | 4 | | | | | | | |
| | R662652000 | BICONO CIERRE SONDA | | 1 | | | | | | | |
| | R662662000 | JUNTA CIERRE BULBO LIMITADOR | | 1 | | | | | | | |
| 21 | R662629000 | RACORD CIERRE SONDA | | 3 | | | | | | | |
| 22 | T323011000 | CONJUNTO TERMOPAR CAMARA | | 1 | | | | | | | |
| 23 | T302646000 | TENSOR PINCHO COMPLETO | | 1 | | | | | | | |
| | Q232030000 | ARANDELA A5 | | 4 | | | | | | | |
| | Q162030000 | TUERCA EXAGONAL M5 | | 4 | | | | | | | |
| | Q242030000 | ARANDELA ABANICO A5 A.304 | | 4 | | | | | | | |
| 24 | Q302022000 | ARANDELA 16x6x1.2 A.304 | | 4 | | | | | | | |
| | Q162030000 | TUER.EXA. M5 | | 4 | | | | | | | |
| 25 | T302644000 | SOPORTE SONDA | | 1 | | | | | | | |
| | Q232030000 | ARANDELA A5 | | 4 | | | | | | | |
| | Q242030000 | ARANDELA ABANICO A5 A.304 | | 4 | | | | | | | |
| | Q162030000 | TUERCA EXAGONAL M.5 | | 4 | | | | | | | |
| 26 | T303007000 | CONJUNTO SONDA PARA NUCLEO | | 1 | | | | | | | |
| | Q162050000 | TUERCA EXAGONAL M8x1 INOX. | | 1 | | | | | | | |

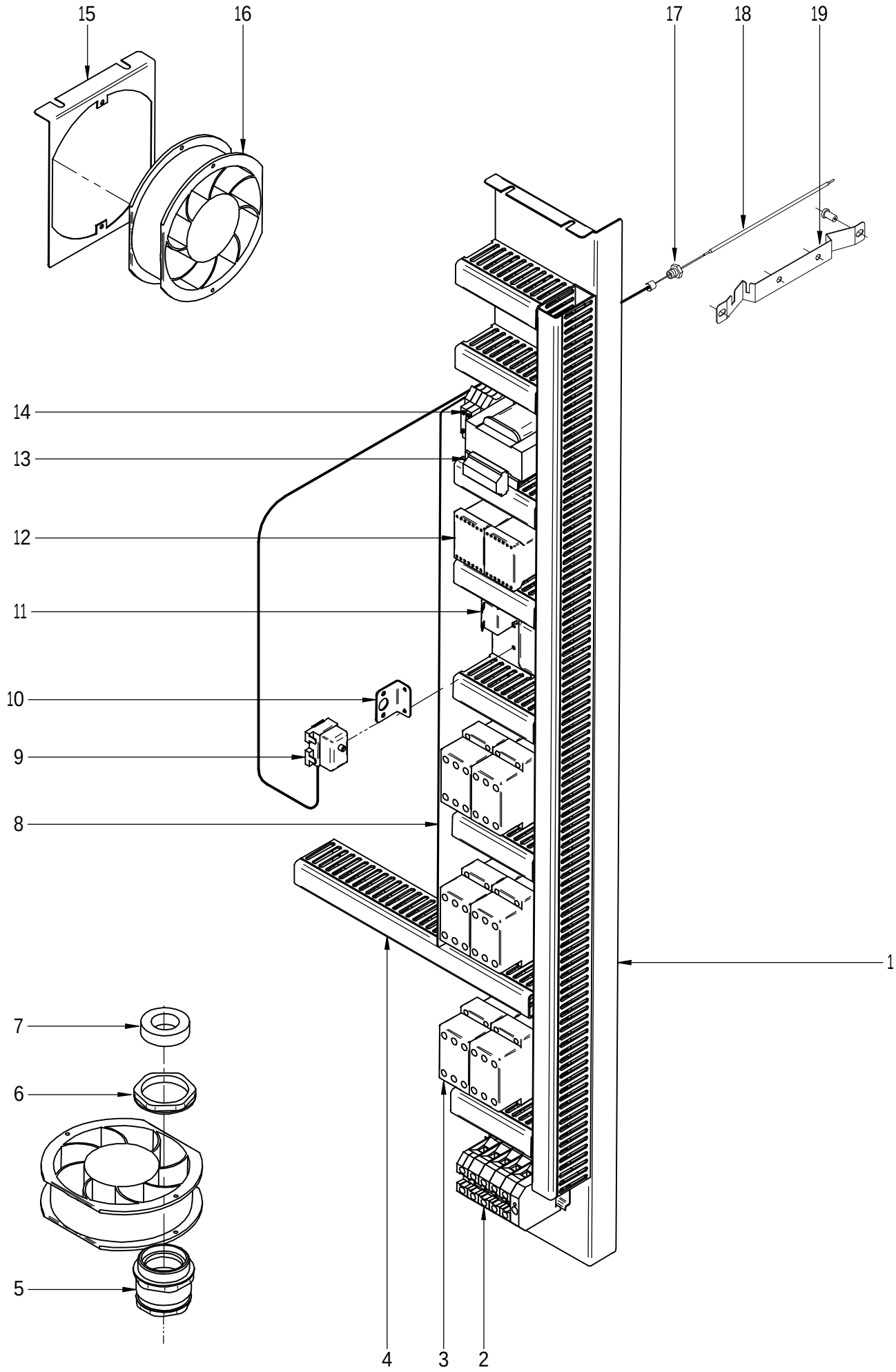


| N plano | Firma | Fecha | Aparato | Lamina | |
|---|---|---|---|---|---|
| C-1788 | | 2007-01 | CUADRO ELECTRICO<br>HORNO HEM 20/21 | 10 | Fagor Industrial S.Coop.<br>Onate |

| MOD. | HORNOS | ZONA | CUADRO ELECTRICO | PLANO | C-1788 |
|---|---|---|---|---|---|

| ITEM | CODIGO | DENOMINACION | TEXTO | HEM 20/21 | | | | | | | NOTAS |
|---|---|---|---|---|---|---|---|---|---|---|---|
| 1 | T453003000 | CUADRO ELECTRICO 20/21 E | | 1 | | | | | | | |
| | Q262040000 | ARAND.GROW. A6 A.304 | | 2 | | | | | | | |
| | Q162040000 | TUERCA EXAGONAL M6 | | 2 | | | | | | | |
| | Q221342000 | REMACHE EXAGONAL M5 | | 2 | | | | | | | |
| | Q242030000 | ARANDELA ABANICO A5 A.304 | | 2 | | | | | | | |
| | Q012032000 | TORNILLO EXAGONAL M5x15 A304 | | 2 | | | | | | | |
| 2 | Z103035000 | BORNA TIERRA 35MM | | 1 | | | | | | | |
| | R143011000 | BORNA WDU-70/N REF.951219 | | 3 | | | | | | | |
| | R143012000 | BORNA WDU-70/N AZUL RE.951242 | | 1 | | | | | | | |
| | Z683096000 | TOPE FINAL WEW35 10590.0 | | 1 | | | | | | | |
| | R663055000 | GUIA CONTACTOR L-120 | | 1 | | | | | | | |
| | Q221341000 | REMACHE EXAGONAL M4 | | 2 | | | | | | | |
| | Q012021000 | TORNILLO EXAGONAL M4x10 A304 | | 2 | | | | | | | |
| 3 | T453016000 | CONTACTOR 50A 3RT1034-1AL20 | | 6 | | | | | | | |
| | T303053000 | UNION CONTACTORES DE INVER. | | 1 | | | | | | | |
| | Z403016000 | GUIA CONTACTOR L-100 | | 3 | | | | | | | |
| 4 | 3715520000 | CANALETA UNEX 60.30.77 / 0,12 | | 7 | | | | | | | |
| 4 | 3715520000 | CANALETA UNEX 60.30.77 / 1,15 | | 1 | | | | | | | |
| 4 | 3715520000 | CANALETA UNEX 60.30.77 / 0,35 | | 1 | | | | | | | |
| 5 | Z312941000 | PRENSA ESTOPAS PG42 | | 1 | | | | | | | |
| 6 | Z312943000 | CONTRATUERCA PG42 | | 1 | | | | | | | |
| 7 | Z312942000 | JUNTA GOMA PG42 | | 1 | | | | | | | |
| 8 | T453006000 | CHAPA PROTECCION CUADRO | | 1 | | | | | | | |
| 9 | Z953035000 | TERMOSTATO LIMITADOR AVISO | | 1 | | | | | | | |
| | Z953041000 | TUERCA M.10x1 EGO 00.00600.075 | | 1 | | | | | | | |
| 10 | R343039000 | SOPORTE TERMOS VAPOR | | 2 | | | | | | | |
| 11 | T303009000 | TERMOSTATO LIMITADOR | | 1 | | | | | | | |
| 12 | Z743009000 | CONT.SIRIUS 3RT10 16-2AP02 | | 2 | | | | | | | |
| | Z403016000 | GUIA CONTACTOR L-100 | | 1 | | | | | | | |
| | | | | | | | | | | | |
| | | | | | | | | | | | |

| MOD. | HORNOS | ZONA | CUADRO ELECTRICO | PLANO | C-1788 |
|---|---|---|---|---|---|

| ITEM | CODIGO | DENOMINACION | TEXTO | HEM 20/21 | | | | | | | NOTAS |
|---|---|---|---|---|---|---|---|---|---|---|---|
| 13 | R503005000 | TRANSFORMADOR | | 1 | | | | | | | |
| | Q221341000 | REMACHE EXAGONAL M4 | | 4 | | | | | | | |
| | Q012021000 | TORNILLO EXAGONAL M4x10 A304 | | 4 | | | | | | | |
| 14 | R073005000 | BORNAS PORTA FUSIBLES | | 2 | | | | | | | |
| | Z263303000 | TOPE FINAL | | 2 | | | | | | | |
| | P184011000 | CARTUCHO FUSIBLE 4.A | | 2 | | | | | | | |
| | R663055000 | GUIA CONTACTOR L-120 | | 1 | | | | | | | |
| 15 | T453008000 | CHAPA AMARRE VENTILADOR 20 | | 1 | | | | | | | |
| 16 | T453005000 | VENTILADOR 230V. 20/21 | | 2 | | | | | | | |
| | Q242020000 | ARANDELA ABANICO A4 A.304 | | 8 | | | | | | | |
| | Q012021000 | TORNILLO EXAGONAL M4x10 A304 | | 8 | | | | | | | |
| | Q162020000 | TUERCA EXAGONAL M4 | | 8 | | | | | | | |
| 17 | R662629000 | RACORD CIERRE SONDA | | 3 | | | | | | | |
| 18 | T323011000 | CONJUNTO TERMOPAR CAMARA | | 1 | | | | | | | |
| 19 | R662683000 | SOPORTE BULBO | | 1 | | | | | | | |
| | Q412002000 | REMACHE AVINOX Ø4x10mm | | 3 | | | | | | | |
| | | | | | | | | | | | |
| | | | | | | | | | | | |
| | | | | | | | | | | | |
| | | | | | | | | | | | |
| | | | | | | | | | | | |
| | | | | | | | | | | | |
| | | | | | | | | | | | |
| | | | | | | | | | | | |
| | | | | | | | | | | | |
| | | | | | | | | | | | |
| | | | | | | | | | | | |
| | | | | | | | | | | | |
| | | | | | | | | | | | |
| | | | | | | | | | | | |
| | | | | | | | | | | | |

| MOD. | HORNOS | ZONA | VARIOS | PLANO | |
|---|---|---|---|---|---|

| ITEM | CODIGO | DENOMINACION | TEXTO | HEM 20/21 | | | | | | | |
|---|---|---|---|---|---|---|---|---|---|---|---|
| | T326500000 | MANUAL DE INSTRUC. ESPAÑOL | | 1 | | | | | | | |
| | T326501000 | MANUAL DE INSTRUC. ALEMAN | | 1 | | | | | | | |
| | T326506000 | MANUAL DE INSTRUC. FRANCES | | 1 | | | | | | | |
| | T326507000 | MANUAL DE INSTRUC. INGLES | | 1 | | | | | | | |
| | T326508000 | MANUAL DE INSTRUC. ITALIANO | | 1 | | | | | | | |
| | | | | | | | | | | | |
| | T453012000 | ESQUEMA TEORICO HEM 20-21 | | 1 | | | | | | | PLANO HC-78009 |
| | T453014000 | PLANO MONTAJE HEM 20/21 | | 1 | | | | | | | PLANO HD-12969 |
| | T303042000 | LEYENDA HORNOS | | 1 | | | | | | | PLANO HC-76970 |
| | | | | | | | | | | | |
| | T303028000 | CABLEADO CONTROLAD. CIRC.LE | | 1 | | | | | | | |
| | T303030000 | CABLEADO CONTROL-POTENCIO. | | 1 | | | | | | | |
| | T493010000 | CABLEADO LUZ INTERIOR 20-21 | | 1 | | | | | | | |
| | T453013000 | INSTALACION ELECTR. HEM 20/21 | | 1 | | | | | | | |
| | T453015000 | CABLEADO RESISTENC. HEM20-21 | | 1 | | | | | | | |
| | T453011000 | CABLEADO FUERZA HEM 20/21 | | 1 | | | | | | | |
| | | | | | | | | | | | |
| | | | | | | | | | | | |
| | | | | | | | | | | | |
| | | | | | | | | | | | |
| | | | | | | | | | | | |
| | | | | | | | | | | | |
| | | | | | | | | | | | |
| | | | | | | | | | | | |
| | | | | | | | | | | | |
| | | | | | | | | | | | |
| | | | | | | | | | | | |
| | | | | | | | | | | | |
| | | | | | | | | | | | |
| | | | | | | | | | | | |

| MOD. | HORNOS | ZONA | CAMBIOS PARA PASAR DE (380-415V. 50Hz) A (220V. 50Hz) | PLANO | C-1783 |
|---|---|---|---|---|---|

| ITEM | CODIGO | DENOMINACION | TEXTO | HEM 20/21 | | | | | | | |
|---|---|---|---|---|---|---|---|---|---|---|---|
| | | **PIEZAS A ELIMINAR** | | | | | | | | | |
| 1 | T493003000 | MOTOR 20/21 2V 400V | | 2 | | | | | | | |
| | T326502000 | ETIQUETA380.415V 50H | | 1 | | | | | | | |
| | | | | | | | | | | | |
| | | | | | | | | | | | |
| | | | | | | | | | | | |
| | | | | | | | | | | | |
| | | | | | | | | | | | |
| | | | | | | | | | | | |
| | | | | | | | | | | | |
| | | | | | | | | | | | |
| | | | | | | | | | | | |
| | | **PIEZAS A INTRODUCIR** | | | | | | | | | |
| 1 | T493004000 | MOTOR 20/21 2V 230V. | | 2 | | | | | | | |
| | T326503000 | ETIQUETA 220V 3 50HZ | | 1 | | | | | | | |
| | | | | | | | | | | | |
| | | | | | | | | | | | |
| | | | | | | | | | | | |
| | | | | | | | | | | | |
| | | | | | | | | | | | |
| | | | | | | | | | | | |
| | | | | | | | | | | | |
| | | | | | | | | | | | |
| | | | | | | | | | | | |
| | | | | | | | | | | | |
| | | | | | | | | | | | |
| | | | | | | | | | | | |
| | | | | | | | | | | | |
| | | | | | | | | | | | |
| | | | | | | | | | | | |
| | | | | | | | | | | | |

| MOD. | HORNOS | ZONA | CAMBIOS PARA PASAR DE (380-415V. 50Hz) A (380-415V. 60Hz) | PLANO | C-1781-85 |
|---|---|---|---|---|---|

| ITEM | CODIGO | DENOMINACION | TEXTO | HEM 20/21 | | | | | | | |
|---|---|---|---|---|---|---|---|---|---|---|---|
| | | **PIEZAS A ELIMINAR** | | | | | | | | | |
| 24 | Z220901000 | BOMBA DESAGUE 30W | | 1 | | | | | | | C-1785 |
| | T326502000 | ETIQUETA380.415V 50H | | 1 | | | | | | | |
| | | | | | | | | | | | |
| | | | | | | | | | | | |
| | | | | | | | | | | | |
| | | | | | | | | | | | |
| | | | | | | | | | | | |
| | | | | | | | | | | | |
| | | | | | | | | | | | |
| | | | | | | | | | | | |
| | | | | | | | | | | | |
| | | **PIEZAS A INTRODUCIR** | | | | | | | | | |
| 24 | Z223501000 | BOMBA DE DESAGUE 30W 60HZ | | 1 | | | | | | | C-1785 |
| | T326504000 | ETIQUETA 380.415V 3N 60HZ | | 1 | | | | | | | |
| | | | | | | | | | | | |
| | T322606000 | REDUCC. CUBREVENT. 60HzD160 | | 2 | | | | | | C-1781 ENTRE PIEZAS 15 Y 17 | |
| | | | | | | | | | | | |
| | | | | | | | | | | | |
| | | | | | | | | | | | |
| | | | | | | | | | | | |
| | | | | | | | | | | | |
| | | | | | | | | | | | |
| | | | | | | | | | | | |
| | | | | | | | | | | | |
| | | | | | | | | | | | |
| | | | | | | | | | | | |
| | | | | | | | | | | | |
| | | | | | | | | | | | |
| | | | | | | | | | | | |

| MOD. | HORNOS | ZONA | CAMBIOS PARA PASAR DE (380-415V. 50Hz) A (220V. 60Hz) | PLANO | C-1781-83-85 |
|---|---|---|---|---|---|

| ITEM | CODIGO | DENOMINACION | TEXTO | HEM 20/21 | | | | | | | |
|---|---|---|---|---|---|---|---|---|---|---|---|
| | | **PIEZAS A ELIMINAR** | | | | | | | | | |
| 1 | T493003000 | MOTOR 20/21 2V 400V | | 2 | | | | | | | C-1783 |
| 24 | Z220901000 | BOMBA DESAGUE 30W | | 1 | | | | | | | C-1785 |
| | T326502000 | ETIQUETA380.415V 50H | | 1 | | | | | | | |
| | | | | | | | | | | | |
| | | | | | | | | | | | |
| | | | | | | | | | | | |
| | | | | | | | | | | | |
| | | | | | | | | | | | |
| | | | | | | | | | | | |
| | | | | | | | | | | | |
| | | | | | | | | | | | |
| | | | | | | | | | | | |
| | | | | | | | | | | | |
| | | **PIEZAS A INTRODUCIR** | | | | | | | | | |
| 1 | T493004000 | MOTOR 20/21 2V 230V. | | 2 | | | | | | | C-1783 |
| 24 | Z223501000 | BOMBA DE DESAGUE 30W 60HZ | | 1 | | | | | | | C-1785 |
| | T326505000 | ETIQUETA 220V 3 60HZ | | 1 | | | | | | | |
| | | | | | | | | | | | |
| | T322606000 | REDUCC. CUBREVENT. 60HzD160 | | 2 | | | | | | C-1781 ENTRE PIEZAS 15 Y 17 | |
| | | | | | | | | | | | |
| | | | | | | | | | | | |
| | | | | | | | | | | | |
| | | | | | | | | | | | |
| | | | | | | | | | | | |
| | | | | | | | | | | | |
| | | | | | | | | | | | |
| | | | | | | | | | | | |
| | | | | | | | | | | | |
| | | | | | | | | | | | |
| | | | | | | | | | | | |

| | ESPAÑOL | FRANÇAIS | ENGLISH | DEUTSCH | ITALIENO |
|---|---|---|---|---|---|
| BEC : | Bujia Encendido Cámara | Bougie Allumage Chambre | Chamber Spark Plug | Zündkerze Einschalten Garraum | Candela di Accensione Camera |
| BEV : | Bujia Encendido Caldera | Bougie Allumage Chaudière | Boiler Spark Plug | Zündkerze Einschalten Boile | Candela di Accensione Caldaia |
| C.E.C : | Control Combustión Cámara | Contrôle Combustion Chambre | Chamber Combustion Control | Steuerung Verbrennung Garraum | Controllo Combustione Camera |
| C.E.G : | Control Electrónico General | Contrôle Électronique Général | Main Electronic Control | Steuerung Elektronik allgemein | Controllo Elettronico Generale |
| C.E.V : | Control Combustión Caldera | Contrôle Combustion Chaudière | Boiler Combustion Control | Steuerung Verbrennung Boiler | Controllo Combustione Caldaia |
| C.H : | Circuito Humedad | Circuit Humidité | Humidity Circuit | Kreislauf Feuchtigkeit | Circuito Umidità |
| C.L : | Circuito Leds | Circuit LEDs | Led Circuit | Kreislauf LEDs | Circuito Leds |
| C.T : | Circuito Teclado | Circuit Clavier | Keypad Circuit | Kreislauf Tastatur | Circuito Tastiera |
| CC1,CC2 : | Contactor Resistencia Cámara | Contacteur Élément Chauffant Chambre | Chamber Heating Element Contactor | Schütz Heizwiderstand Garraum | Contattore Resistenza Camera |
| CMD : | Contactor Motor Derecha | Contacteur Moteur Droite | Right Engine Contactor | Schütz Motor rechts | Contattore Motore Destra |
| CMI : | Contactor Motor Izquierda | Contacteur Moteur Gauche | Left Engine Contactor | Schütz Motor links | Contattore Motore Sinistra |
| CR : | Rele Arranque | Relais Démarrage | Starting Relay | Relais Anlauf | Relè Accensione |
| CV1,CV2 : | Contactor Resistencias Caldera | Contacteur Élément Chauffant Chaudière | Boiler Heating Element Contactor | Schütz Heizwiderstand Boiler | Contattore Resistenza Caldaia |
| DEC : | Detector Llama Cámara | Détecteur Flamme Chambre | Chamber Flame Detector | Flammendetektor Garraum | Rilevatore di Fiamma Camera |
| DEV : | Detector Llama Caldera | Détecteur Flamme Chaudière | Boiler Flame Detector | Flammendetektor Boiler | Rilevatore di Fiamma Caldaia |
| DN : | Detector Nivel Caldera | Détecteur Niveau Chaudière | Boiler Level Detector | Pegeldetektor Boiler | Rilevatore Livello Caldaia |
| EM : | Encoder Selector Tiempo | Encodeur Sélecteur Temps | Time Selector Encoder | Encoder Zeitwahlschalter | Encoder Selettore Tempo |
| E°C : | Encoder Selector Temperatura | Encodeur Sélecteur Température | Temperature Selector Encoder | Encoder Temperaturwahlschalter | Encoder Selettore Temperatura |
| F : | Fusibles | Fusibles | Fuses | Sicherungen | Fusibili |
| FI : | Filtro Interferencias | Filtre Interférences | Interference Filter | Störungsfilter | Filtro Interferenze |
| FM : | Térmico Motor | Thermique Moteur | Thermal Engine | Thermoschalter Motor | Termico Motore |
| GV1,GV2 : | Electro válvula Gas Cámara | Électrovanne Gaz Chambre | Chamber Gas Solenoid Valve | Elektroventil Gas Garraum | Elettrovalvola Gas Camera |
| GV3,GV4 : | Electro válvula Gas Caldera | Électrovanne Gaz Chaudière | Boiler Gas Solenoid Valve | Elektroventil Gas Boiler | Elettrovalvola Gas Caldaia |
| IC : | Selector Velocidad Potencia | Sélecteur Vitesse Puissance | Power Speed Selector | Wahlschalter Geschwindigkeit Leistung | Selettore Velocità Potenza |
| IG : | Interruptor General | Interrupteur Général | Main Switch | Hauptschalter | Interruttore generale |
| IL : | Interruptor Seguridad Lavado | Interrupteur Sécurité Lavage | Washing Safety Switch | Sicherheitsschalter Waschen | Interruttore Sicurezza Lavaggio |
| Ip : | Interruptor Seguridad Puerta | Interrupteur Sécurité Porte | Door Safety Switch | Sicherheitsschalter Tür | Interruttore Sicurezza Porta |
| KI1,KI2,CK1,CK2 : | Rele Resistencia | Relais Élément Chauffant | Heating Element Relay | Relais Heizwiderstand | Relè Resistenza |
| Lz : | Luz Interior | Éclairage Interieur | Inner Light | Innenbeleuchtung | Luce Interna |
| M,M1,M2 : | Motor Turbina | Moteur Turbine | Turbine Engine | Motor Turbine | Motore Turbina |
| Mch : | Motor Chimenea | Moteur Cheminée | Stack Engine | Motor Abluftkamin | Motore Canna |
| Md : | Motor Válvula | Moteur vanne | Valve Engine | Motor Ventil | Motore Valvola |
| MBA : | Bomba Lavado | Pompe Lavage | Washing Pump | Waschenpumpe | Pompa lavaggio |
| Mb : | Interruptor Micro Bajada | Microrupteur Descente | Drop Microswitch | Mikroschalter Senken | Interruttore Micro Discesa |
| Ms : | Interruptor Micro Subida | Microrupteur Montée | Rise Microswitch | Mikroschalter Heben | Interruttore Micro Salita |
| PF : | Potenciómetro Selector Funciones | Potentiomètre Sélecteur Fonctions | Functions Selector Potentiometer | Potentiometer Funktionswahlschalter | Potenziometro Selettore Funzioni |
| PRG : | Programador | Programmateur | Programmer | Programmiervorrichtung | Programmatore |
| RC : | Resistencias Cámara | Eléments Chauffants Chambre | Chamber Heating Element | Heizwiderstände Garraum | Resistenze Camere |
| RV : | Resistencias Caldera | Eléments Chauffants Chaudière | Boiler Heating Element | Heizwiderstände Boiler | Resistenze Caldaia |
| Tc : | Sonda Cámara | Sonde Chambre | Chamber Probe | Sonde Garraum | Sonda Camera |
| TCN : | Termostato Condensación | Thermostat Condensation | Condensation Thermostat | Thermostat Kondensierung | Termostato Condensazione |
| Tg : | Sonda Caldera | Sonde Chaudière | Boiler Probe | Sonde Boiler | Sonda Caldaia |
| TH : | Sonda Humedad | Sonde Humidité | Humidity Probe | Sonde Feuchtigkeit | Sonda Umidità |
| Tn : | Sonda Núcleo | Sonde Noyau | Core Probe | Kerntemperaturmessonde | Sonda Nucleo |
| TRF : | Transformador | Transformateur | Transformer | Transformator | Trasformatore |
| TSC : | Termostato Seguridad Cámara | Thermostat Sécurité Chambre | Chamber Safety Thermostat | Sicherheitsthermostat Garraum | Termostato Sicurezza Camera |
| TSV : | Termostato Seguridad Caldera | Thermostat Sécurité Chaudière | Boiler Safety Thermostat | Sicherheitsthermostat Boiler | Termostato Sicurezza Caldaia |
| Tv : | Sonda Vapor | Sonde Vapeur | Steam Probe | Sonde Dampf | Sonda Vapore |
| VAC : | Bomba Vaciado | Pompe Vidange | Vacuum Pump | Ablasspumpe | Pompa scarico |
| VAcl : | Electro válvula Aclarado | Électrovanne Rinçage | Rinsing Solenoid Valve | Elektroventil Klarspülen | Elettrovalvola Risciacquo |
| VC : | Ventilador Soplante | Ventilateur Soufflant | Blowing Fan | Ventilator Gebläse | Ventilatore Soffiante |
| VCN : | Electro válvula Condensación | Électrovanne Condensation | Condensation Solenoid Valve | Elektroventil Kondensierung | Elettrovalvola Condensazione |
| VDV : | Electro válvula Llenado Caldera | Électrovanne Remplissage Chaudière | Chamber Filling Solenoid Valve | Elektroventil Füllung Boiler | Elettrovalvola di Riempimento Caldaia |
| VE : | Ventilador Cuadro Eléctrico | Ventilateur Tableau Electrique | Fan Switchboard | Ventilator Elektrotafel | Ventilatore Quadro Elettrico |
| VHM : | Electro válvula Humidificador | Électrovanne Humidificateur | Humidifier Solenoid Valve | Elektroventil Befeuchtungsvorrichtung | Elettrovalvola Umidificatore |
| VLav : | Electro válvula Lavado | Electrovanne Lavage | Washing Solenoid Valve | Elektroventil Waschen | Elettrovalvola Lavaggio |
| Vv : | Variador Velocidad | Variateur Vitesse | Speed Variator | Geschwindigkeitsregler | Variatore di Velocità |
| COLOR | COLORES | COULEURS | COLOUR | FARBEN | COLORE |
| Va : | Azul | Bleu | Blue | Blau | Blu |
| am : | Amarillo | Jaune | Yellow | Gelb | Giallo |
| am/ve : | Amarillo/verde | Jaune /vert | Yellow /green | Gelb/grün | Giallo/verde |
| b : | Blanco | Blanc | White | Weiß | Bianco |
| g : | Gris | Gris | Grey | Grau | Grigio |
| m : | Marrón | Marron | Brown | Braun | Marrone |
| n : | Negro | Noir | Black | Schwarz | Nero |
| na : | Naranja | Orange | Orange | Orange | Arancio |
| r : | Rojo | Rouge | Red | Rot | Rosso |
| rs : | Rosa | Rose | Pink | Rosa | Roseo |
| ve : | Verde | Vert | Green | Grün | Verde |
| vi : | Violeta | Violet | Purple | Violett | Viola |

Leyenda Hornos HC-76970-1 T303042000

# HEM 20 / 21  HEP 20/21

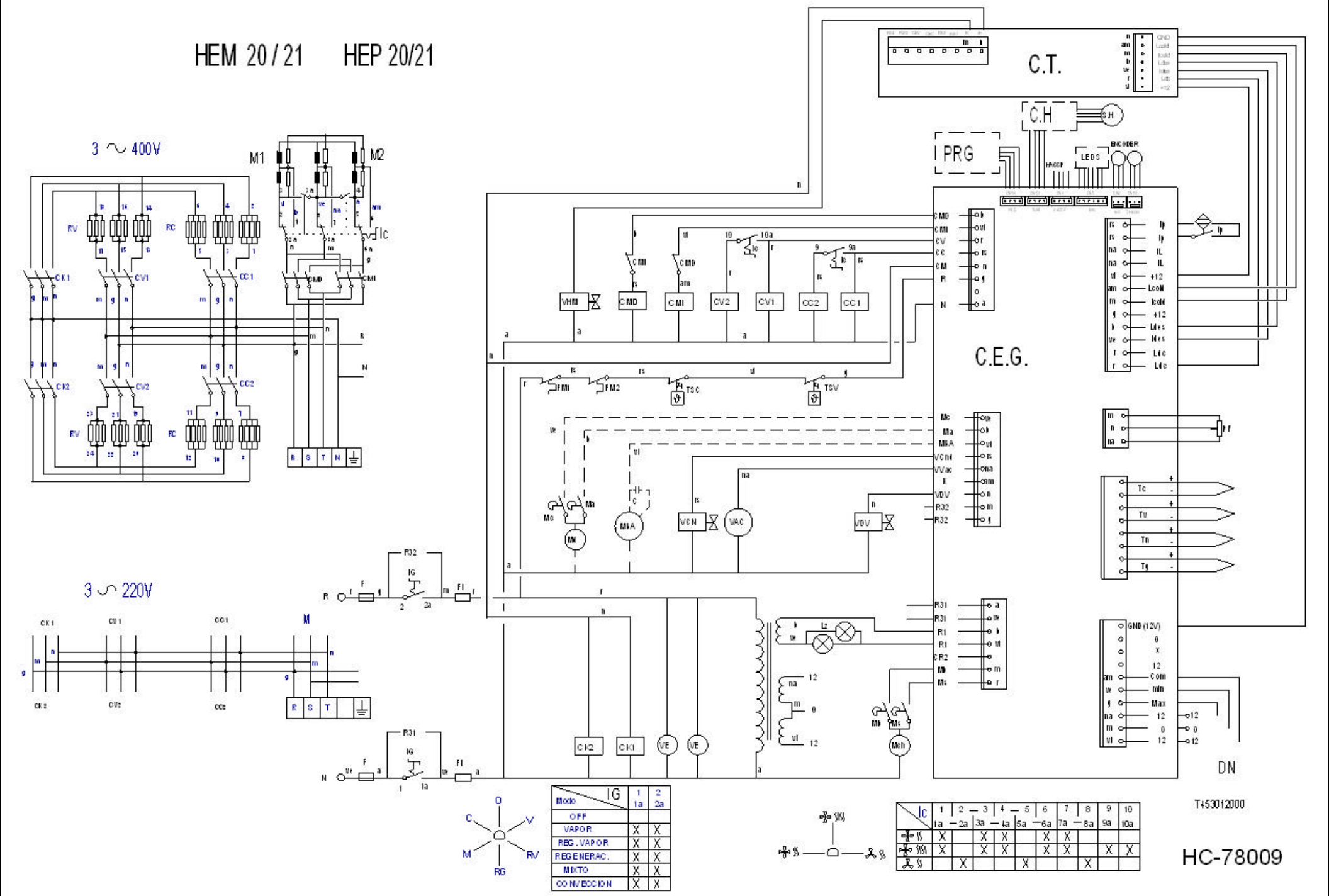


| Modo \ IG | 1 1a | 2 2a |
|---|---|---|
| OFF | | |
| VAPOR | X | X |
| REG. VAPOR | X | X |
| REGENERAC. | X | X |
| MIXTO | X | X |
| CONVECCION | X | X |

| Ic | 1 1a | 2 — 2a | 3 3a | 4 — 4a | 5 5a | 6 — 6a | 7 7a | 8 — 8a | 9 9a | 10 10a |
|---|---|---|---|---|---|---|---|---|---|---|
| | X | | X | X | | X | X | | | |
| | X | | X | X | | X | X | | X | X |
| | | X | | | X | | | X | | |

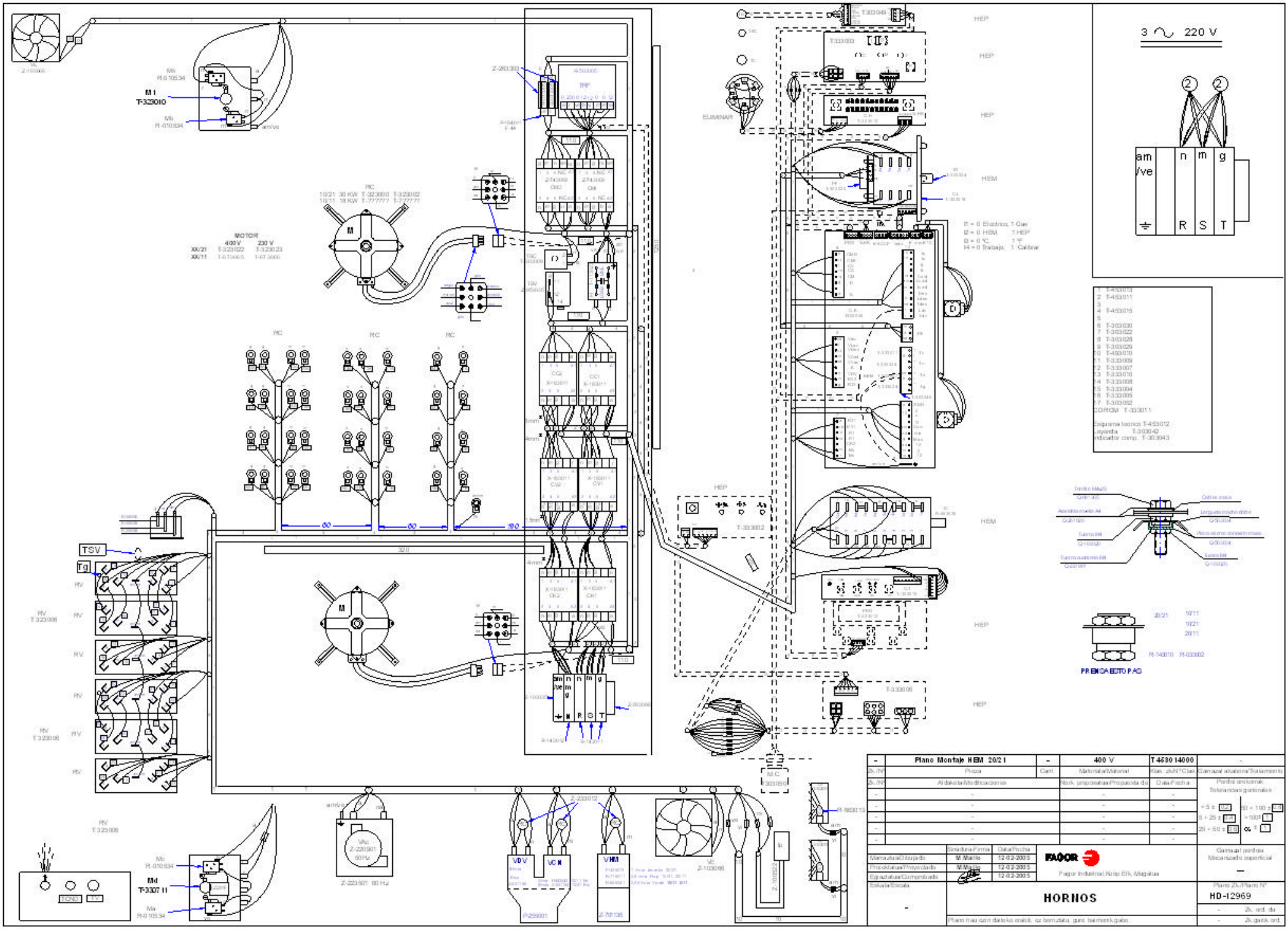
3 ∿ 220 V
am /ve
n
m
g
R
S
T
MOTOR
400 V
230 V
M1
T-323010
Md
T-3307 11
TSV
Tg
RV
RC
HEP
HEM
ELIMINAR
PRENSA ESTOPAS
Z-223501 60 Hz
VDV
VCN
VHM
M.C.
Plano Montaje HEM 20/21
400 V
T 4580 14000
Gamazal alcalina/Tratamiento
Pedro Ochoa
Manuel Murillo
12-02-2005
FAGOR
Fagor Industrial, Koop. Erk. Mugatua
HORNOS
HD-12969