Mod./Type:	_70/... TPE... - _90/... TPE... EXTREME	cod./num.	2531594.00
		data/date:	03/05/2014

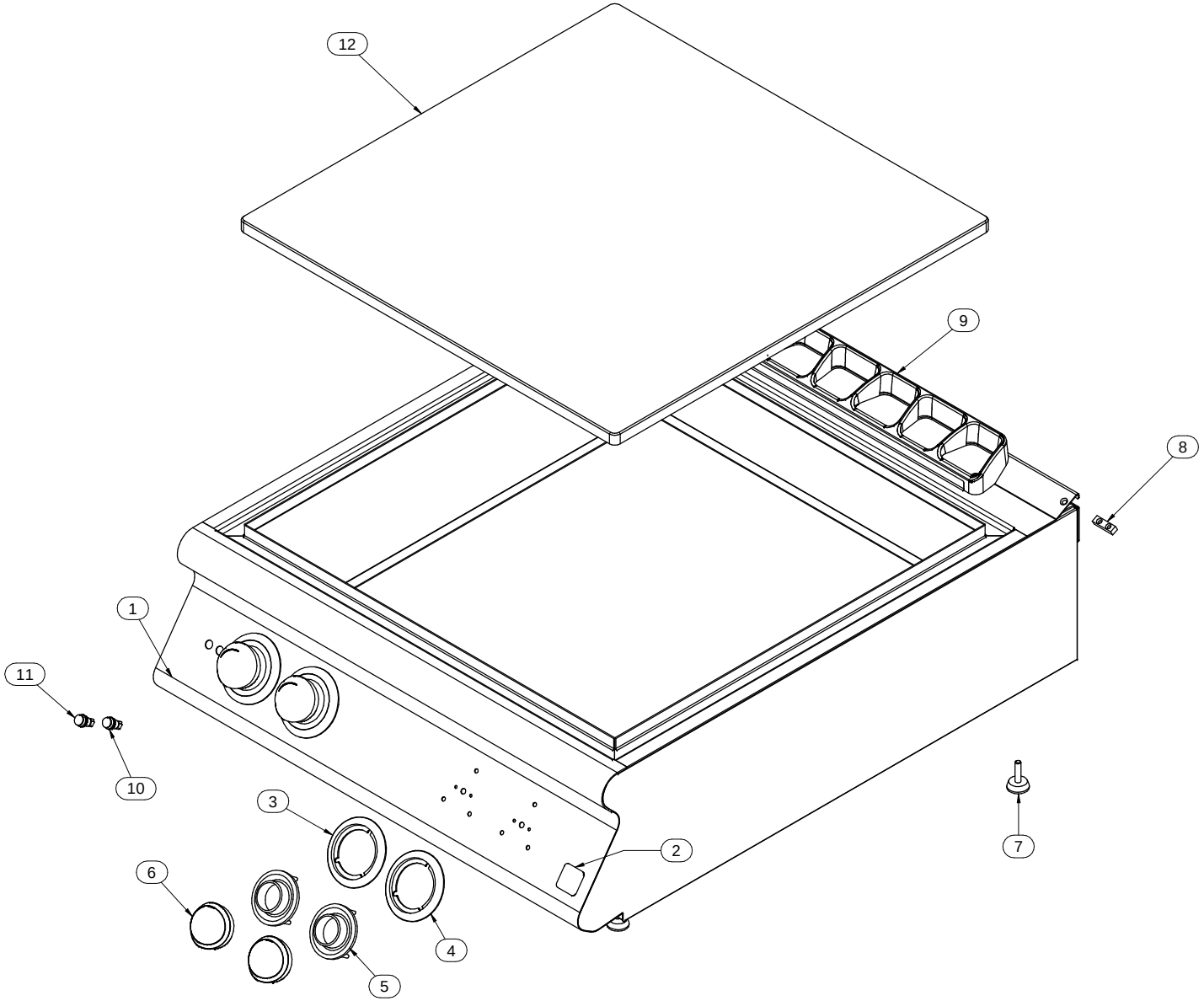

Mod./Type: **_70/... TP...E... - _90/... TP...E...**

EXTREME

cod./num. 2531633.00

data/date: 13/05/2014

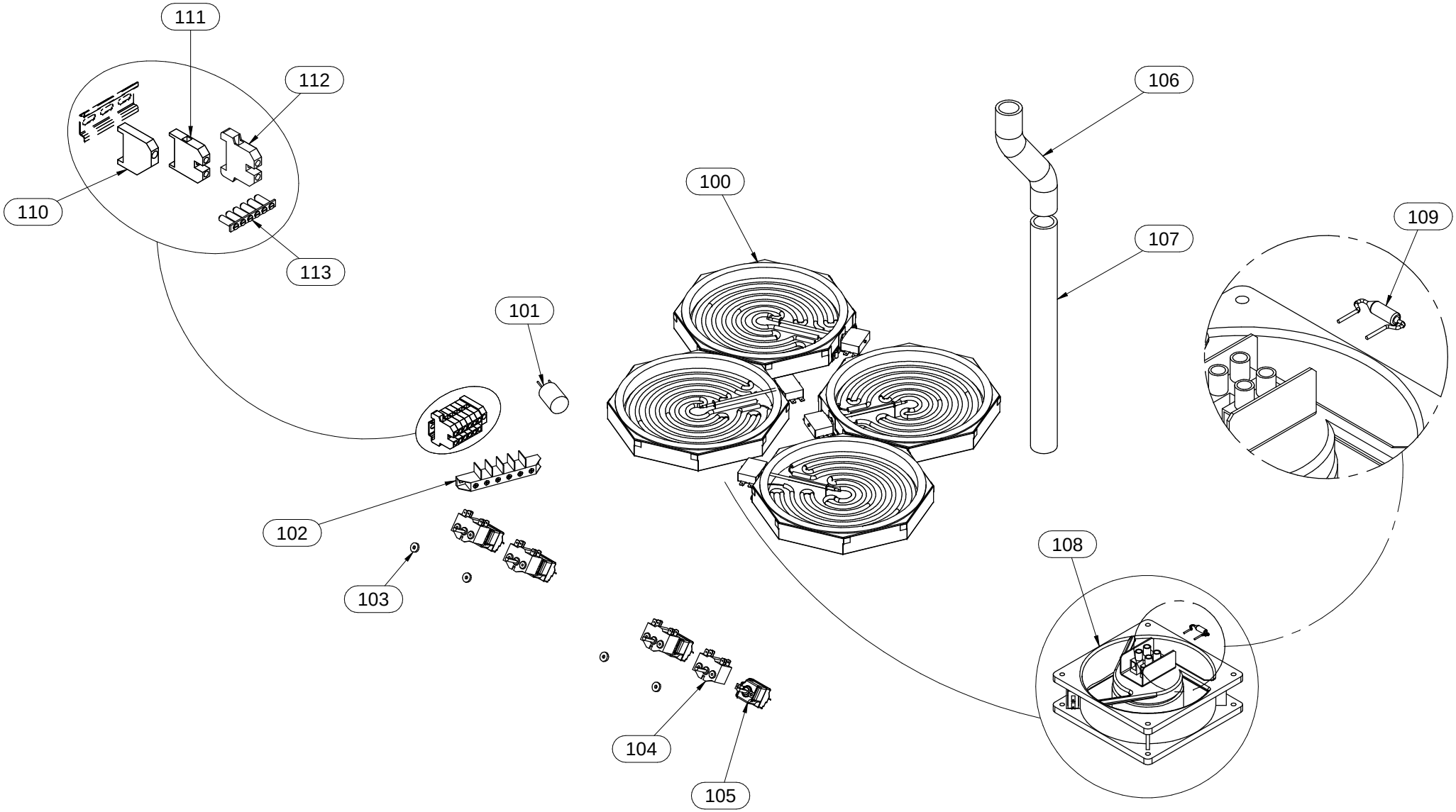

Mod./Type: **EM70 - EM90 .../40 ... - .../80 ... - .../120 ...**

EM90/160 ... VANO / CABINET

cod./num. 2531578.00

data/date: 05/06/2014

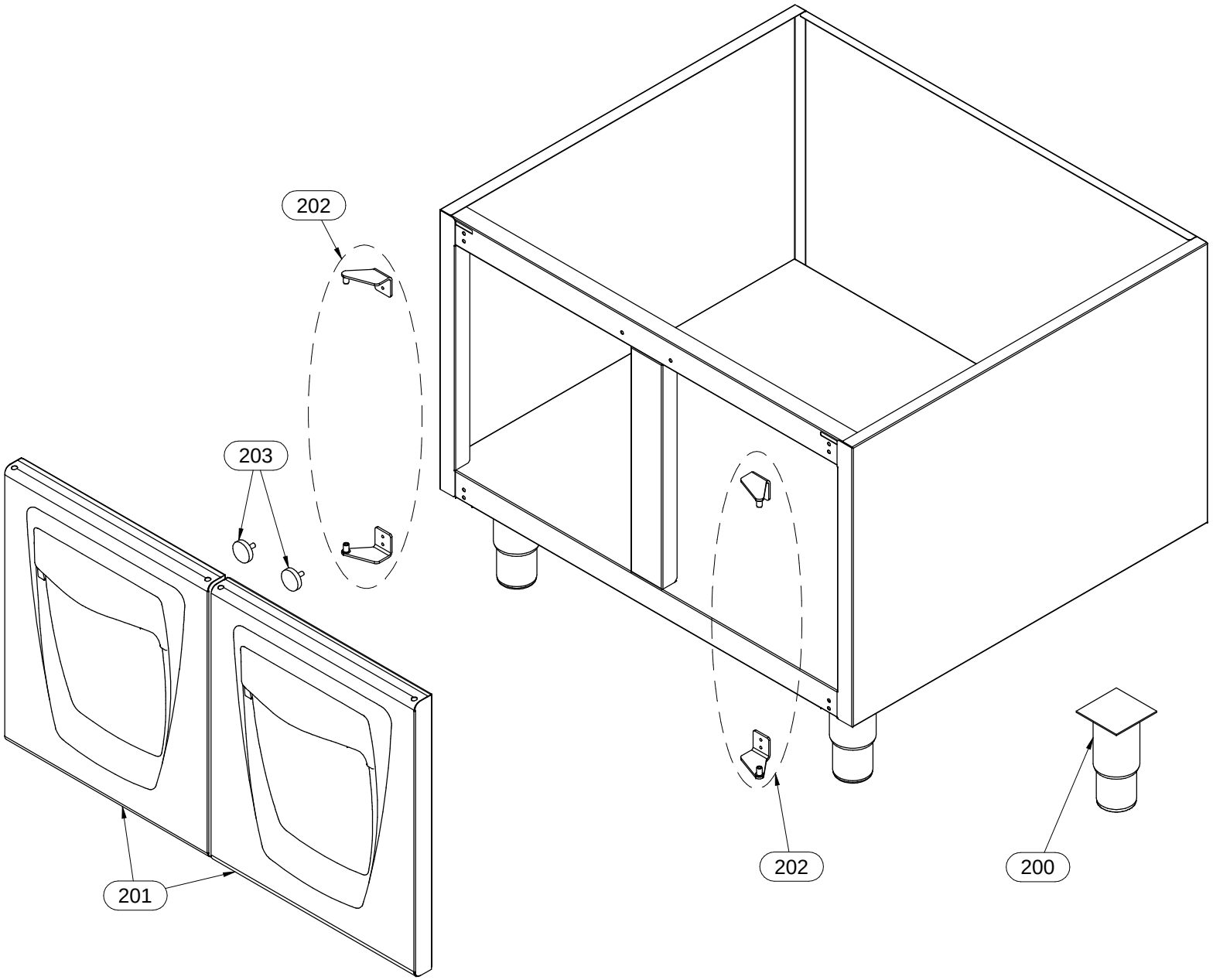

Mod.:	_70/... TPE... - _90/... TPE... EXTREME			cod. / num. 2531595.00 data / date 25/08/2014 rif. / ref. 2531594.00		EM70/80 TPE...	EM90/80 TPE...	EM90/80 TPE2...	NOTE	
POS.	DESCRIZIONE	DESCRIPTION	DENOMINATION	BENENNUNG	COD.	Q.ty				
1	CRUSCOTTO	CONTROL PANEL	BANDEAU	BEDIENBLENDE	9111357.00	1	1	1		
2	MARCHIO	BRAND NAME	MARQUE	MARKENZEICHEN	982.021.00	1	1	1	**FROM: 15.12.2011**	**TO: 31.01.2014**
					982.023.00	1	1	1	**FROM: 01.02.2014**	**TO:...**
3	SERIGRAFIA	SCREEN PRINT	SÉRIGRAPHIE	SIEBDRUCK	910.171.00	2	2	2		
4	SERIGRAFIA	SCREEN PRINT	SÉRIGRAPHIE	SIEBDRUCK	910.172.00	2	2	2		
5	LABIRINTO	LABYRINTH	LABYRINTHE	LABYRINTH	256.235.00	4	4	4		
6	MANOPOLA	KNOB	BOUTON	DREHKNOPF	253.234.00	4	4	4		
7	PIEDINO	FOOT	PIED	STELLFUSS	951.050.00	4	4	4	SOLO VERSIONE (-T)	ONLY (-T) VERSION
8	PIASTRINA GIUNZIONE	FIXING PLATE	PLAQUETTE FIXAGE	BEFESTIGUNGSPLATTE	941.130.00	1	1	1		
9	GRIGLIA CAMINO	FLUE GRIDDLE	GRILLE POUR CHEMINÉE	KAMINROST	982.013.00	1	1	1		
10	LAMPADA SPIA ARANCIO	ORANGE INDICATOR LIGHT	LAMPE TEMOIN ORANGE	ORANGE KONTROLLAMPE	963.013.00	1	1	1		
11	LAMPADA SPIA ROSSA	RED INDICATOR LIGHT	LAMPE TEMOIN ROUGE	ROTE KONTROLLLAMPE	963.014.00	1	1	1		
12	PIASTRA	SOLID TOP	PLAQUE COUP DE FEU	KOCHFELD	681.086.00	1				
					981.097.00		1	1		
13										
14										
15										
16										
17										
18										
19										
20										
21										
22										
23										
24										
25										
26										
27										
28										
29										
30										
31										
32										
33										
34										

Mod.:	_70/... TP...E... - _90/... TP...E... EXTREME			cod. / num. 2531634.00 data / date 05/05/2014 rif. / ref. 2531633.00		_70/80 TPE...	_70/80 TPFE	_70/80 TPFE2	_90/80 TPE...	_90/80 TPE2...	_90/80 TPFE	_90/80 TPFE2	NOTE	
POS.	DESCRIZIONE	DESCRIPTION	DENOMINATION	BENENNUNG	COD.	Q.ty								
100	RESISTENZA	HEATING ELEMENT	RESISTANCE	HEINZELEMENT	665.052.00	4	4	4						
					965.041.00				4	4	4	4		
101	FILTRO ANTIDISTURBO	STORFILTER	FILTER ANTIBROUILLAGE	ANTIJAMMING FILTER	464.067.00	3	3	3	3	3	3	3		
102	MORSETTIERA	TERMINAL BOARD	BORNES	KLEMMENBRETT	M566050500	1	1	-	1	-	1	-		
103	GUARNIZIONE	WASHER	GUARNITURE	DICHTUNGSRING	953.020.00	4	6	6	4	4	6	6		
104	COMMUTATORE	CHANGE-OVER SWITCH	COMMUTATEUR	UMSCHALTER	661.093.00	4	4	4	4	4	4	4		
105	TERMOSTATO	THERMOSTAT	THERMOSTAT	THERMOSTAT	661.121.00	4	4	4	4	4	4	4		
106	SCARICO	DRAIN	VIDANGE	ABLAUF	0831.2027.00	0.25	0.8	0.8	0.25	0.25	0.5	0.5	(U.M. metri)	(U.M.meters)
107	SCARICO	DRAIN	VIDANGE	ABLAUF	0831.2027.00	0.41	-	-	0.41	0.41	-	-	(U.M. metri) - NO PER VERSIONE (-T)	(U.M.meters) - NOT FOR (-T) VERSION
108	VENTOLA	FAN	VENTILATEUR	LÜFTERRAD	764.055.00	1	1	1	1	1	1	1		
109	TERMOFUSIBILE	THERMAL FUSE	FUSIBLE THERMIQUE	THERMO-SCHMELZSICHERUNG	663.078.00	1	1	1						
					663.077.00				1	1	1	1		
110	BLOCCAMORSETTI	TERMINAL STOPPER	BORNE BLOQUANT	BLÖCK-KLEMME	663.059.00	-	-	1	-	1	-	1		
111	MORSETTO	TERMINAL	BORNE	KLEMME	663..061.00	-	-	6	-	6	-	6		
112	MORSETTO TERRA - PE	PE-TERMINAL	BORNE PE	ERD-KLEMME	663.060.00	-	-	1	-	1	-	1		
113	BARRETTE COLLEGAMENTO	CONNECTOR PIN	BARRETTE DE CONNECTION	VERBINDUNG-STAB	663.056.00	-	-	1	-	1	-	1		
114														
115														
116														
117														
118														
119														
120														
121														
122														
123														
124														
125														
126														
127														
128														
129														
130														
131														
132														
133														
134														
135														
136														
137														
138														
139														
140														

Mod.:	EM70/... - EM90/… VANO / CABINET			cod. / num. 2531579.00 data / date 05/06/2014 rif. / ref. 2531578.00		EM70/40 ...	EM70/80 ...	EM70/120 ...	EM90/40 ...	EM90/80 ...	EM90/120 ...	EM90/160 ...	NOTE	
POS.	DESCRIZIONE	DESCRIPTION	DENOMINATION	BENENNUNG	COD.	Q. ty								
200	PIEDINO	FOOT	PIED	STELLFUSS	912.090.00	4	4	4	4	4	4	6	FROM: 15.12.2011	TO: 17.05.2013
					912.090.14	4	4	4	4	4	4	6	FROM: 18.05.2013	TO:...
201	PORTA	DOOR	PORTE	TÜR	256.215.00	1	2	3	1	2	3	4		
202	COPPIA CERNIERE	GASKETS PAIR	COUPLE CHARNIÈRES	SCHARNIERPAAR	256.216.00	1	2	3	1	2	3	4		
203	MAGNETE	MAGNET	MAGNÉTO	MAGNET	684.007.00	1	2	3	1	2	3	4	FROM: 15.12.2011	TO: 01.01.2014
					984.006.00	1	2	3	1	2	3	4	FROM: 02.01.2014	TO:...
204														
205														
206														
207														
208														
209														
210														
211														
212														
213														
214														
215														
216														
217														
218														
219														
220														
221														
222														
223														
224														
225														
226														
227														
228														
229														
230														
231														
232														
233														
234														