SIMAG

ELECTRONIC MODULAR CUBER

SV 135

SPARE PARTS LIST
CATALOGO RICAMBI
CATALOGUE PIÈCES DÉTACHÉES
ERSATZTEILENKATALOG

090090.17 - REV. 07/2006

PAGE PAGINA PAGE SEITE	TABLE OF CONTENTS	INDICE	TABLE DES MATIÉRES	INHALTVERZEICHNIS
1	TABLE OF CONTENTS	INDICE	TABLE DES MATIÉRES	INHALTVERZEICHNIS
2-3	CABINET ASSY	ASSIEME MOBILE	ENSEMBLE CAROSSERIE	AUSSENWANDE
4-5	REFRIGERANT SYSTEM AIR COOLED	SISTEMA REFRIGERANTE RAFFR. AD ARIA	CIRCUIT FRIGORIFIQUE REFROID. A AIR	GEFRIERSYSTEM LUFTGEKÜHLT
6-7	REFRIGERANT SYSTEM WATER COOLED	SISTEMA REFRIGERANTE RAFFR. AD ACQUA	CIRCUIT FRIGORIFIQUE REFROID. A EAU	GEFRIERSYSTEM WASSERGEKÜHLT
8-9	ICE MAKING SYSTEM	GRUPPO EVAPORATORE	GROUP EVAPORATEUR	VERDAMPFER
10-11	P.C. BOARD AND SENSORS ASSY	SCHEDA ELETTRONICA E SENSORI	ENS. CARTE ELECTRONIQUE ET DETECTEURS	ELEKTRONISCHE PLATINE UND TEMPERRATURFUEHLERENHEIT

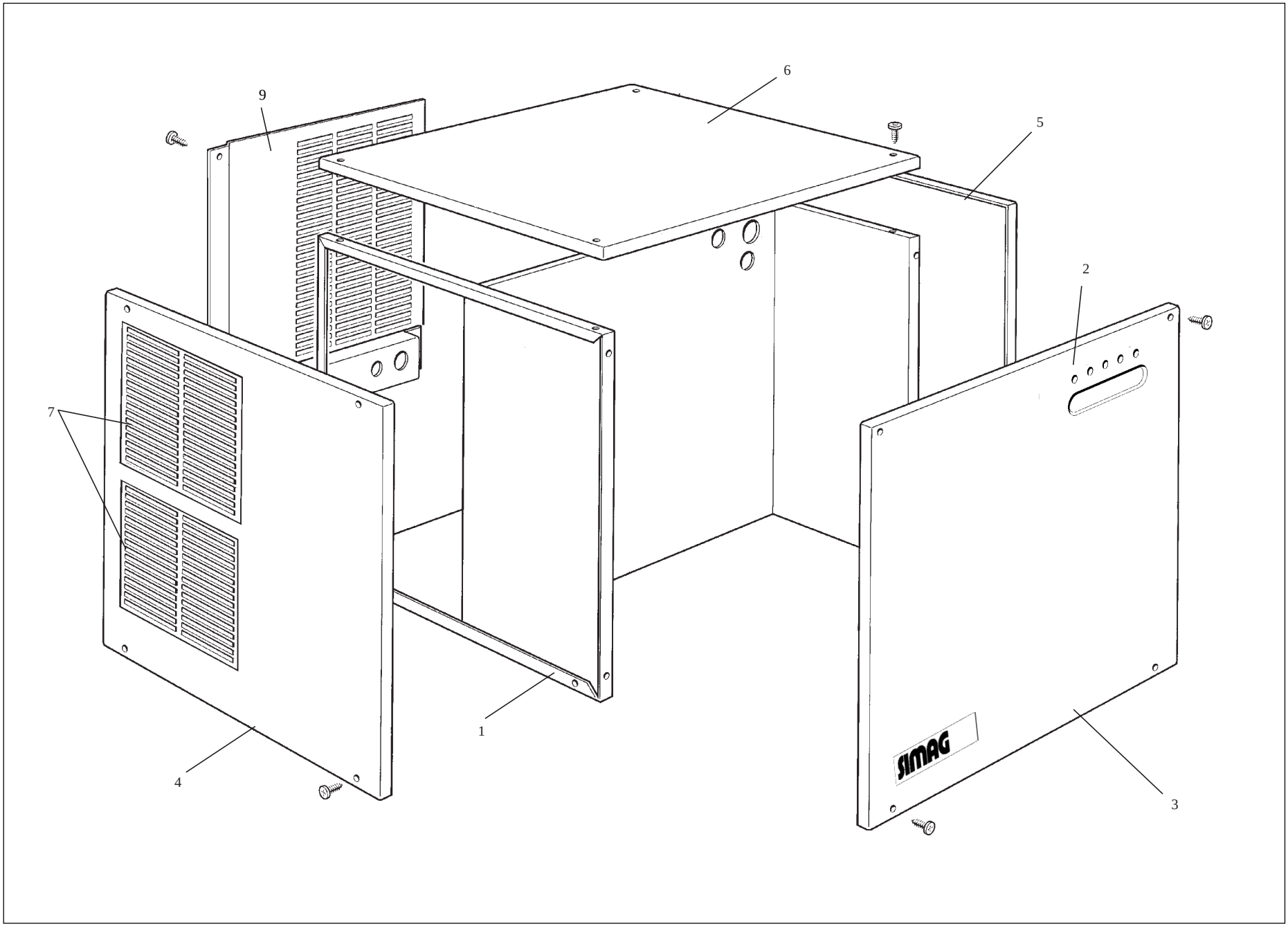
9
6
5
2
7
1
4
3
SIMAG

SV 135 - CABINET ASSY - ASS. MOBILE - ENSEMBLE CAROSSERIE - AUSSENWAENDE

ITEM NO POS NO REP. NO REF. NO	PART NO CODICE REFERENCE STUECK NR	DESCRIPTION	DESCRIZIONE	DESIGNATION	BESCHREIBUNG
1	CM 81453686	UNIT FRAME	ASSIEME TELAIO	ENS. CHASSIS	GEHAUSETEILE
2	CM 19262786	LABEL, MONITORING PANEL	ETICHETTA, LED	ETIQUETTE, LED	AUFKLEBER, LED
3	CM 81453784	PANEL, FRONT	PANNELLO FRONTALE	PANNEAU AVANT	VORDERWAND
4	CM 25330790	PANEL, LEFT SIDE	PANNELLO LAT. SX	PANNEAU GAUCHE	LINKSWAND
5	CM 25330788	PANEL, RIGHT SIDE	PANNELLO LAT. DX	PANNEAU DROITE	RECHTSWAND
6	CM 81453712	PANEL, TOP	PANNELLO SUPERIORE	PANNEAU DESSUS	ABDECKHAUBE
7	CM 28295030	GRILL PLASTIC	GRIGLIA IN PLASTICA	GRILLE EN PLASTIQUE	PLASTIKGRILL
9	CM 25550806	PANEL, REAR - WATER COOLED	PANNELLO POSTERIORE - ACQUA	PANNEAU ARRIERE - EAU	RUECKWAND - WASSER
*	CM 19262785	LABEL SV 135	ETICHETTA SV 135	ETIQUETTE SV 135	AUFKLEBER SV 135
*	CM 19262781	LABEL SIMAG	ETICHETTA SIMAG	ETIQUETTE SIMAG	AUFKLEBER SIMAG

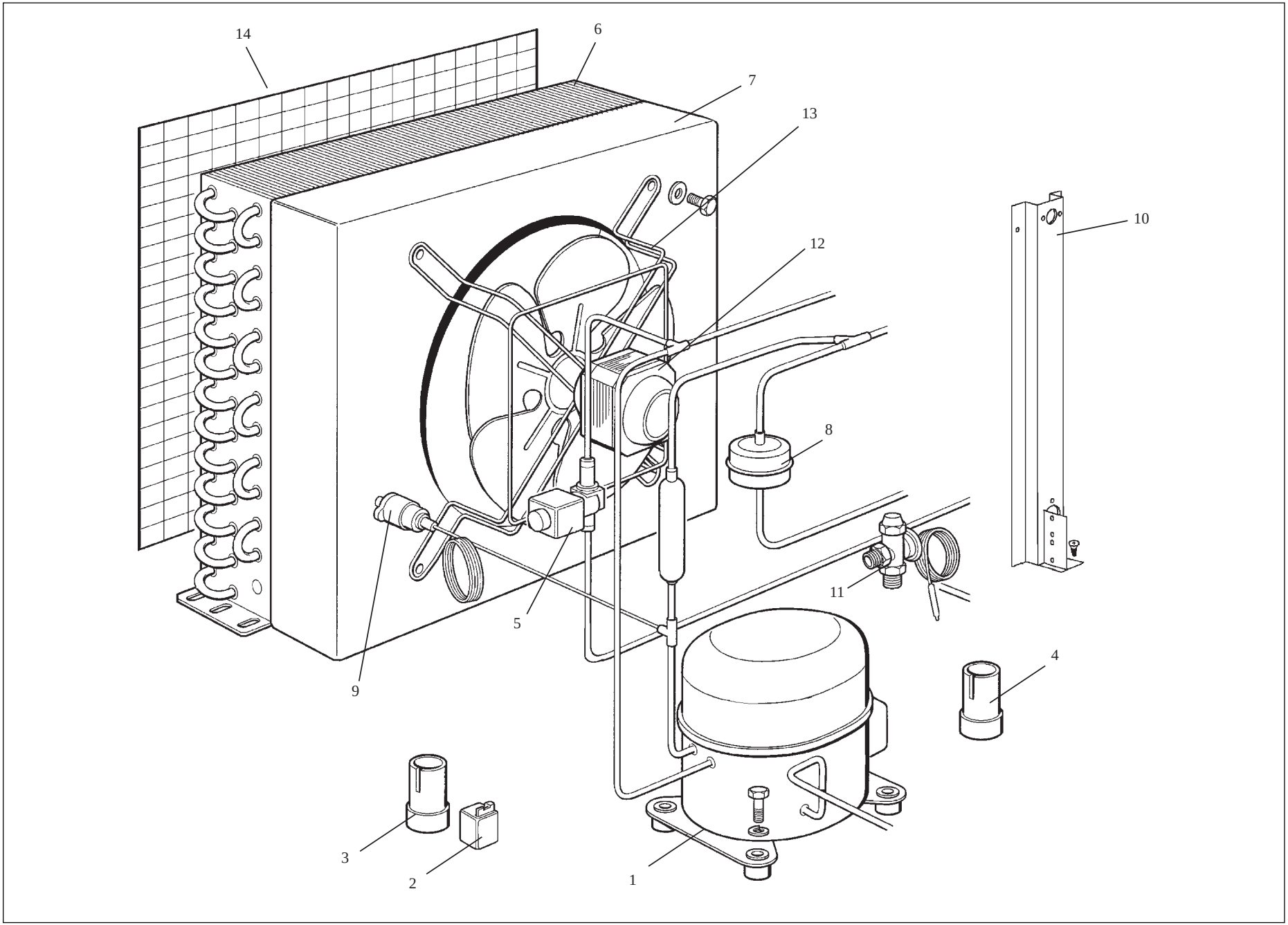
14
6
7
13
12
10
8
11
5
9
4
3
2
1

SV 135 - REFRIGERANT SYSTEM AIR COOLED - SISTEMA REFRIGERANTE RAFFR. AD ARIA
CIRCUIT FRIGORIFIQUE REFROID. PAR AIR - LUFTGEKÜHLTE GEFRIERSYSTEM

ITEM NO POS NO REP. NO REF. NO	PART NO CODICE REFERENCE STUECK NR	DESCRIPTION	DESCRIZIONE	DESIGNATION	BESCHREIBUNG
1	670101 03 CM 19165603 *****	COMPRESSOR - 230/50/1 COMPRESSOR - 230/60/1 PROTECTOR - 230/50/1 PROTECTOR - 230/60/1 CRANKCASE HEATER	COMPRESSORE - 230/50/1 COMPRESSORE - 230/60/1 PROTETTORE - 230/50/1 PROTETTORE - 230/60/1 RESISTENZA CARTER	COMPRESSEUR - 230/50/1 COMPRESSEUR - 230/60/1 PROTECTEUR - 230/50/1 PROTECTEUR - 230/60/1 RECHAUFFEUR CARTER	KOMPRESSOR - 230/50/1 KOMPRESSOR - 230/60/1 SCHUTZVORRICHTUNG - 230/50/1 SCHUTZVORRICHTUNG - 230/60/1 KURBEL WANNENHEIZUN
2	620168 22 CM 196217 01	STARTING RELAY - 230/50/1 STARTING RELAY - 230/60/1	RELE AVVIAMENTO - 230/50/1 RELE AVVIAMENTO - 230/60/1	RELAIS - 230/50/1 RELAIS - 230/60/1	RELAIS - 230/50/1 RELAIS - 230/60/1
3	620167 01	STARTING CAPACITOR 64-77 MF 330 V	CAPACITA' AVVIAMENTO 64-77 MF 330 V	CAPACITE DE DEMARRAGE 64-77 MF 330 V	STARTKONDENSATOR 64-77 MF 330 V
4	620167 21 620167 40	RUNNING CAPACITOR 15 MF 400 V RUNNING CAPACITOR 7,5 MF 370 V	CAPACITA' MARCIA 15 MF 400 V CAPACITA' MARCIA 7,5 MF 370 V	CAPACITE PERMANENT 15 MF 400 V CAPACITE PERMANENT 7,5 MF 370 V	BETRIEBSKONDENSATOR 15 MF 400 V BETRIEBSKONDENSATOR 7,5 MF 370 V
5	CM 19863034	HOT GAS VALVE 230/50-60	VALVOLA GAS CALDO 230/50-60	VANNE GAZ CHAUD 230/50-60	HEISSGASVENTIL 230/50-60
6	CM 19177077	AIR COOLED CONDENSER	CONDENSATORE AD ARIA	CONDENSEUR A AIR	KONDENSATOR
7	CM 25168795	CONDENSER SHROUD	CONVOGLIATORE	CONVOYEUR	KONDENSATOR GEHÄUSE
8	CM 19300357	DRIER	FILTRO	DESHYDRATEUR	TROCKNER
9	CM 81453749	HI PRESSURE CONTROL	PRESSOSTATO SICUREZZA	PRESSOSTAT DE SECURITÉ	SICHERHEITPRESSOSTAT
10	CM 25725530	METAL BRACKET	SUPPORTO IN METALLO	SUPPORT METALLIQUE	METALTRÄGER
11	CM 81453621	THERM. EXP. VALVE	VALVOLA D'ESPANSIONE	DETENDEUR	EXPANSIONSVENTIL
12	CM 18562524	FAN MOTOR 230/50-60	MOTORE VENTILATORE 230/50-60	MOTEUR DU VENTILATEUR 230/50-60	LUFTERMOTOR 230/50-60
13	CM 18740032 CM 25168800	FAN BLADE FAN BRACKET	VENTOLA SUPPORTO MOTORE	HELICE SUPPORT MOTEUR	FLUEGEL LUFTER MOTOR TRAEGER
14	CM 25339007	CONDENSER FILTER	FILTRO CONDENSATORE	FILTRE CONDENSEUR	KONDENSATORFILTER

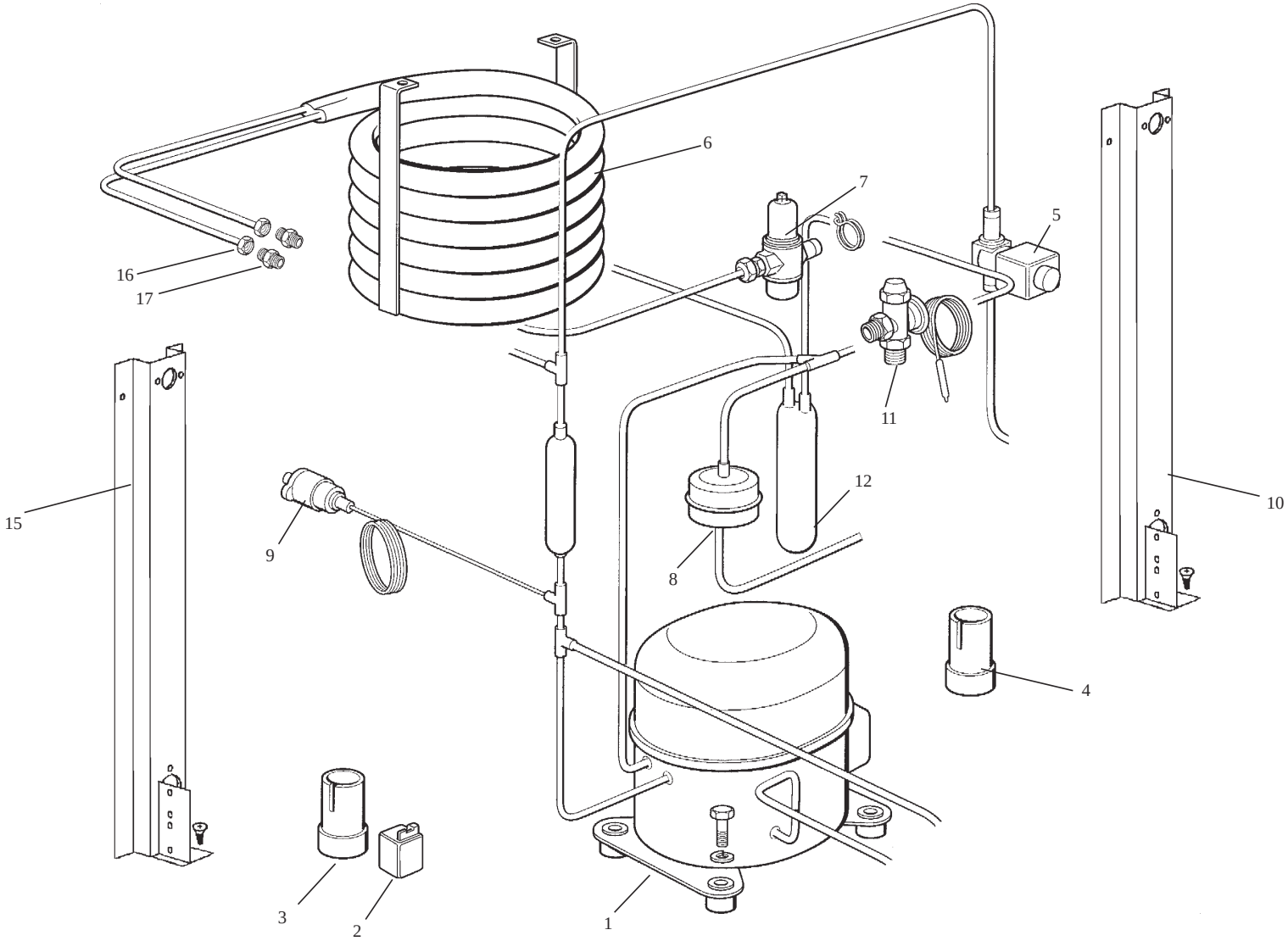
6
7
5
16
17
11
15
12
10
9
8
4
3
2
1

SV 135 - REFRIGERANT SYSTEM WATER COOLED - SISTEMA REFRIGERANTE RAFFR. AD ACQUA
CIRCUIT FRIGORIFIQUE REFROID. PAR EAU - WASSERGEKÜHLTE GEFRIERSYSTEM

ITEM NO POS NO REP. NO REF. NO	PART NO CODICE REFERENCE STUECK NR	DESCRIPTION	DESCRIZIONE	DESIGNATION	BESCHREIBUNG
1	670101 03 CM 19165603 *****	COMPRESSOR - 230/50/1 COMPRESSOR - 230/60/1 PROTECTOR - 230/50/1 PROTECTOR - 230/60/1 CRANKCASE HEATER	COMPRESSORE - 230/50/1 COMPRESSORE - 230/60/1 PROTETTORE - 230/50/1 PROTETTORE - 230/60/1 RESISTENZA CARTER	COMPRESSEUR - 230/50/1 COMPRESSEUR - 230/60/1 PROTECTEUR - 230/50/1 PROTECTEUR - 230/60/1 RECHAUFFEUR CARTER	KOMPRESSOR - 230/50/1 KOMPRESSOR - 230/60/1 SCHUTZVORRICHTUNG - 230/50/1 SCHUTZVORRICHTUNG - 230/60/1 KURBEL WANNENHEIZUN
2	620168 22 CM 196217 01	STARTING RELAY - 230/50/1 STARTING RELAY - 230/60/1	RELE AVVIAMENTO - 230/50/1 RELE AVVIAMENTO - 230/60/1	RELAIS - 230/50/1 RELAIS - 230/60/1	RELAIS - 230/50/1 RELAIS - 230/60/1
3	620167 01	STARTING CAPACITOR 64-77 MF 330 V	CAPACITA' AVVIAMENTO 64-77 MF 330 V	CAPACITE DE DEMARRAGE 64-77 MF 330 V	STARTKONDENSATOR 64-77 MF 330 V
4	620167 21 620167 40	RUNNING CAPACITOR 15 MF 400 V RUNNING CAPACITOR 7,5 MF 370 V	CAPACITA' MARCIA 15 MF 400 V CAPACITA' MARCIA 7,5 MF 370 V	CAPACITE PERMANENT 15 MF 400 V CAPACITE PERMANENT 7,5 MF 370 V	BETRIEBSKONDENSATOR 15 MF 400 V BETRIEBSKONDENSATOR 7,5 MF 370 V
5	CM 19863034	HOT GAS VALVE 230/50-60	VALVOLA GAS CALDO 230/50-60	VANNE GAZ CHAUD 230/50-60	HEISSGASVENTIL 230/50-60
6	CM 81453744	WATER COOLED CONDENSER	CONDENSATORE AD ACQUA	CONDENSEUR A EAU	KONDENSATOR
7	620111 00	WATER REGULATING VALVE	VALVOLA PRESSOSTATICA	VANNE PRESSOSTATIQUE	WASSERREGLER VENTIL
8	CM 19300357	DRIER	FILTRO	DESHYDRATEUR	TROCKNER
9	CM 81453749	HI PRESSURE CONTROL	PRESSOSTATO SICUREZZA	PRESSOSTAT DE SECURITÉ	SICHERHEITPRESSOSTAT
10	CM 25725530	METAL BRACKET LT	SUPPORTO IN METALLO SX	SUPPORT METALLIQUE GAUCHE	METALTRÄGER LINKE
11	CM 81453621	THERM. EXP. VALVE	VALVOLA D'ESPANSIONE	DETENDEUR	EXPANSIONSVENTIL
12	CM 81453745	ACCUMULATOR ASSY	ASS. ACCUMULATORE	ENS. ACCUMULATEUR	SAMMLER
15	CM 25725537	METAL BRACKET RT	SUPPORTO IN METALLO DX	SUPPORT METALLIQUE DROITE	METALTRÄGER RECHTE
16	CM 25631047	FITTING	RACCORDO	RACCORDE	WASSERBEFESTIGUNG
17	CM 25631045	FITTING	RACCORDO	RACCORDE	WASSERBEFESTIGUNG

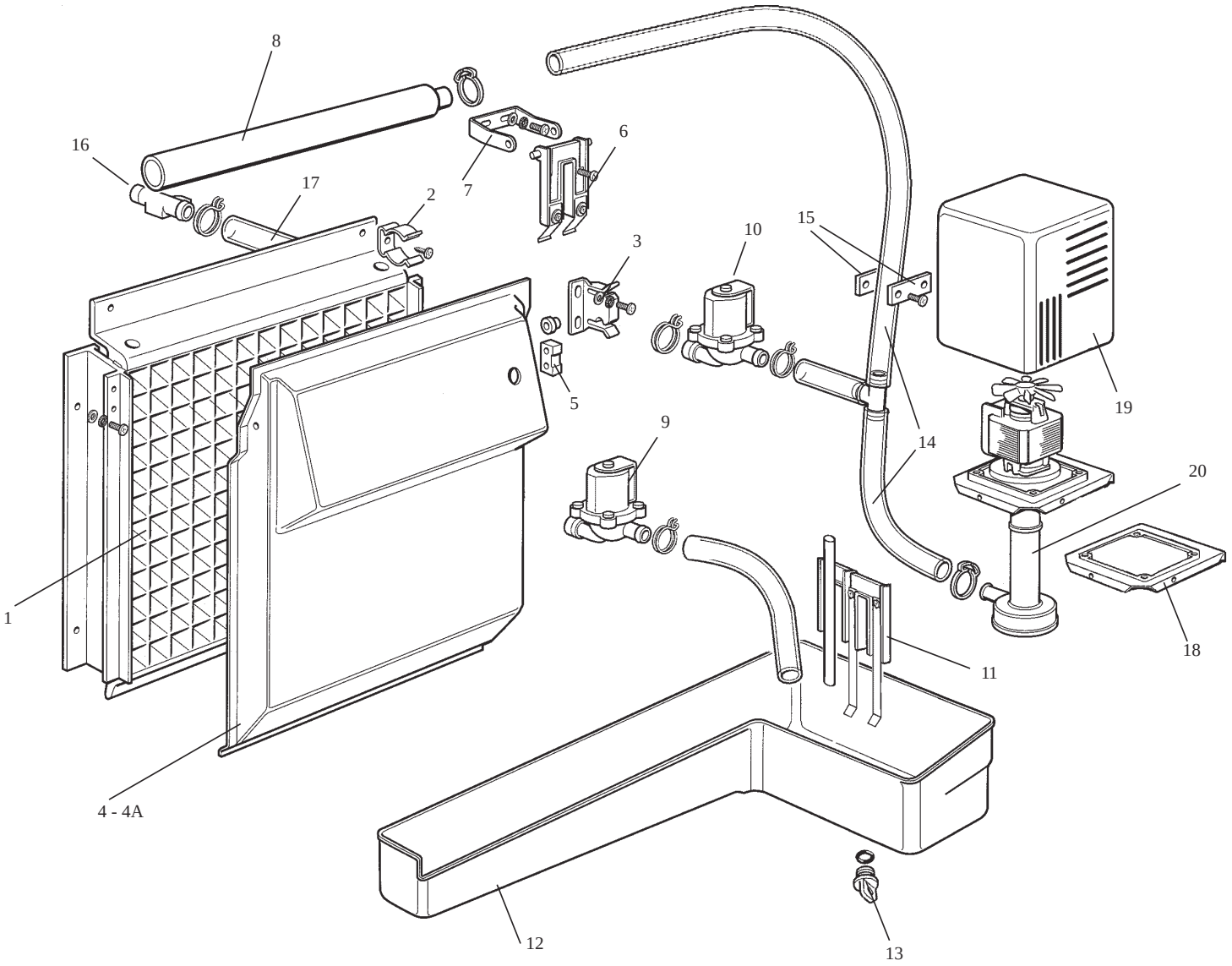
8
16
17
2
7
6
3
10
15
5
9
14
19
20
1
4 - 4A
11
18
12
13

SV 135 - ICE MAKING SYSTEM - GRUPPO EVAPORATORE - GROUP EVAPORATEUR - VERDAMPFER

ITEM NO POS NO REP. NO REF. NO	PART NO CODICE REFERENCE STUECK NR	DESCRIPTION	DESCRIZIONE	DESIGNATION	BESCHREIBUNG
1	CM 81453690	EVAPORATOR ASSY EVAPORATOR ASSY - HALF DICE	ASS. EVAPORATORE ASS. EVAPORATORE - MEZZO CUBETTO	ENS. EVAPORATEUR ENS. EVAPORATEUR - DEMI GLAÇON	VERDAMPFEREINHEIT VERDAMPFEREINHEIT - MINI WÜRFEL
2	CM 25474608	METAL CLIP	MOLLETTA IN METALLO	SUPPORT	UNKLAMMERN
3	CM 25726473	BRACKET, DEFLECTOR COVER	SUPPORTO COPERCHIO DEFLETTORE	SUPPORT COUVERCLE/DEFLECTEUR	LENKWAND KLAMMERN
4	CM 25820123	DEFLECTOR COVER	COPERCHIO DEFLETTORE	COUVERCLE/DEFLECTEUR	LENKWAND
5	CM 19355007	MAGNET	MAGNETE	MAGNETO	MAGNET
6	CM 81453434	ICE THICKNESS SENSOR	SENSORE SPESSORE GHIACCIO	SONDE EPAISSEUR GLAÇONS	EISGROSSENßFÜHLER
7	CM 25725450	BRACKET, ICE THICKNESS SENSOR	SUPPORTO SENSORE GHIACCIO	SUPPORTO DISPOSITIF CAPTEUR	EISMEßFÜHLER KLAMMERN
8	CM 81463460	TUBE, WATER DISTRIBUTOR	TUBO DI DISTRIBUZIONE	POMPE DE DISTRIBUTION EAU	WASSERSPRUEHEINHEIT
9	650105 54	WATER INLET VALVE 230/50-60	VALVOLA INGR. ACQUA 230/50-60	V. EN. ARRIVÉE EAU 230/50-60	WASSEREINLAUFVENTIL 230/50-60
10	620460 00	VALVE, WATER DRAIN	VALVOLA DI SCARICO	VANNE DE VIDANGE EAU	WASSERABFLUSSVENTIL
11	CM 81453590	WATER LEVEL SENSOR	SONDA LIVELLO ACQUA	SONDE NIVEAU EAU	WASSERNIVEAU FÜHLER
12	CM 81453705	WATER SUMP	VASCHETTA ACQUA	RESERVOIR D'EAU	WASSERBECKEN
13	CM 25730503 CM 41020488	DRAIN PLUG O RING	TAPPO SCARICO GUARNIZIONE OR	BOUCHON DE VIDANGE JOINT TORIQUE	VERSCHLUßSCRAUBE O RING
14	CM 81453567	TUBE, WATER	TUBO	TUYAU	ROHR
15	CM 81453015	WATER FLOW ADJUSTER ASSY	ASS. REGOLATORE PORTATA	ENS. REGLEUR DE DEBIT EAU	WASSERFLUSS REGLER
16	CM 25690807	DRAIN FITTING, WATER	RACCORDO SCARICO	RACCORD EVACUATION EAU	WASSERABFLUSS STÜCK
17	CM 81453562	TUBE	TUBO	TUYAU	SCHLAUCH
18	CM 81453693	BRACKET, PUMP	SUPPORTO POMPA	SUPPORT POMPE	PUMPENTRAEGER
19	CM 25330808	WATER PUMP COVER	COPERCHIO POMPA	COUVERCLE POMPE	PUMPE ABDECKUNG
20	620433 00 620433 01	WATER PUMP - 230/50/1 WATER PUMP - 230/60/1	POMPA - 230/50/1 POMPA - 230/60/1	POMPE A EAU - 230/50/1 POMPE A EAU - 230/60/1	WASSERPUMPE - 230/50/1 WASSERPUMPE - 230/60/1

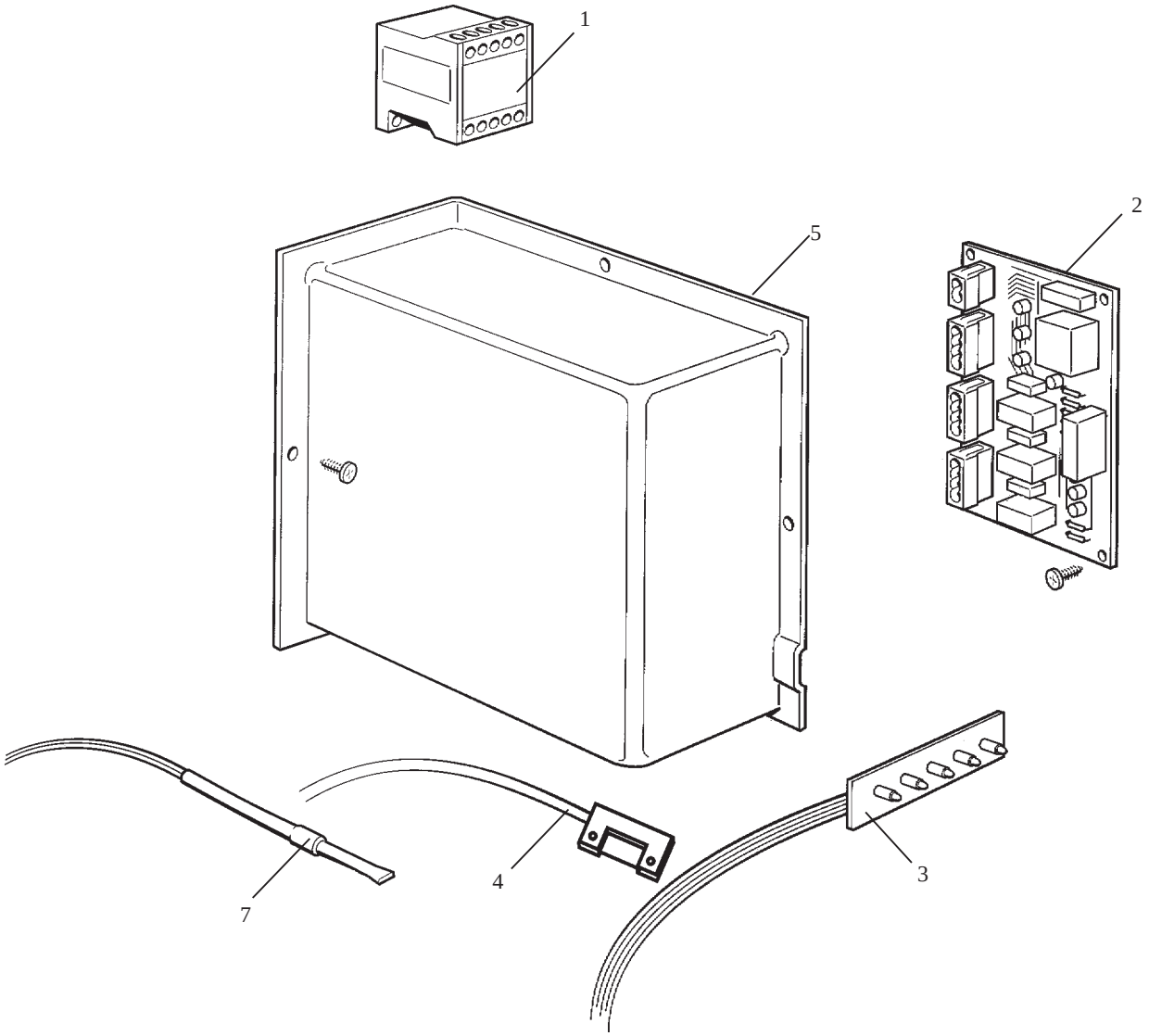
1
2
5
7
4
3

SV 135 - P.C. BOARD AND SENSOR ASSY - SCHEDA ELETTRONICA E SENSORI
ENS. CARTE ELECTRINIQUE ET DETECTEURS - ELEKTRONISCHE KARTE UND TEMPERATURFUEHLERENHEIT

ITEM NO POS NO REP. NO REF. NO	PART NO CODICE REFERENCE STUECK NR	DESCRIPTION	DESCRIZIONE	DESIGNATION	BESCHREIBUNG
1	CM 33730712	CONTACTOR	TELERUTTORE	CONTACTEUR	SCHALTSCHÜTZ
2	CM 33580150	P.C. BOARD	SCHEDA ELETTRONICA	CARTE ELECTRONIQUE	STEUERKARTE
3	CM 33580151	MONITORING LED ASSY	PANNELLO DI CONTROLLO	ENS. LED DE SIGNALISATION	SIGNAL LED EINHEIT
4	CM 33210018	MAGNETIC SENSOR	SENSORE MAGNETICO	SONDE MAGNETIQUE	MAGNETISCHES FÜHLER
5	CM 25161162	CONTROL BOX COVER	COPERCHIO	COUVERCLE	ANSCHLUSSKASTEN GEHAUSE
7	CM 33580101	CONDENSER SENSOR	SENSORE CONDENSATORE	SONDE CONDENSEUR	KONDENSER FÜHLER

SIMAG
ICE MACHINES

www.simag.it

SIMAG
via Risorgimento, 4
20017 Mazzo di Rho (MI) - Italy
Tel. +39 02 93900215 (Commerciale - Sales Dept.)
Tel. +39 02 93960357 (Assistenza - Service Dept.)
Fax +39 02 93900226 (Commerciale - Sales Dept.)
Fax +39 02 93960366 (Assistenza - Service Dept.)
e-mail: sales@simag.it
e-mail: service@simag.it

Singapore Office
SIMAG FAR EAST
627A Aljunied Road
04-04 Biztech Centre
Singapore 389842
Tel. ++65 6738 5393
Fax ++65 6738 1959
e-mail: scotsice@singnet.com.sg

Certified ISO 9001
TOTAL QUALITY