SAGI - BASE REFRIGERATA 530 lt,prof.70 cm, -2/+8°C
KIC4A - 25-07-2006 » 29-06-2007

/A=PIANO CON ALZATINA
/A=SHELF+ RIDGE
/A=PLATTE MIT RUECKLEISTE
/A=RAYON AVEC ETAGERE
/A=TOPE CON ELEV.

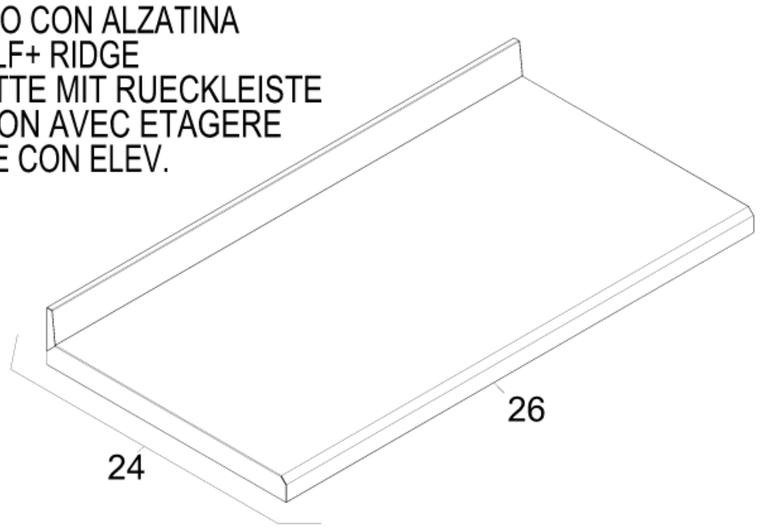

/M=PIANO SENZA ALZATINA
/M=SHELF WITHOUT RIDGE
/M=PLATTE OHNE RUECKLEISTE
/M=RAYON SANS ETAGERE
/M=TOPE SIN ELEV

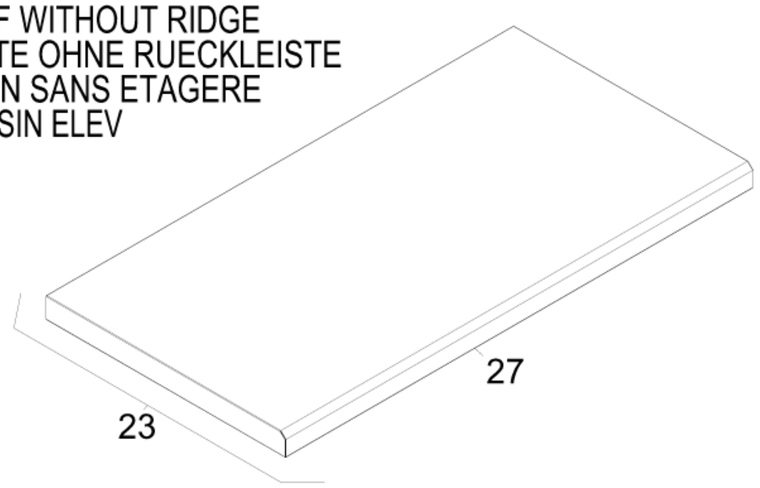

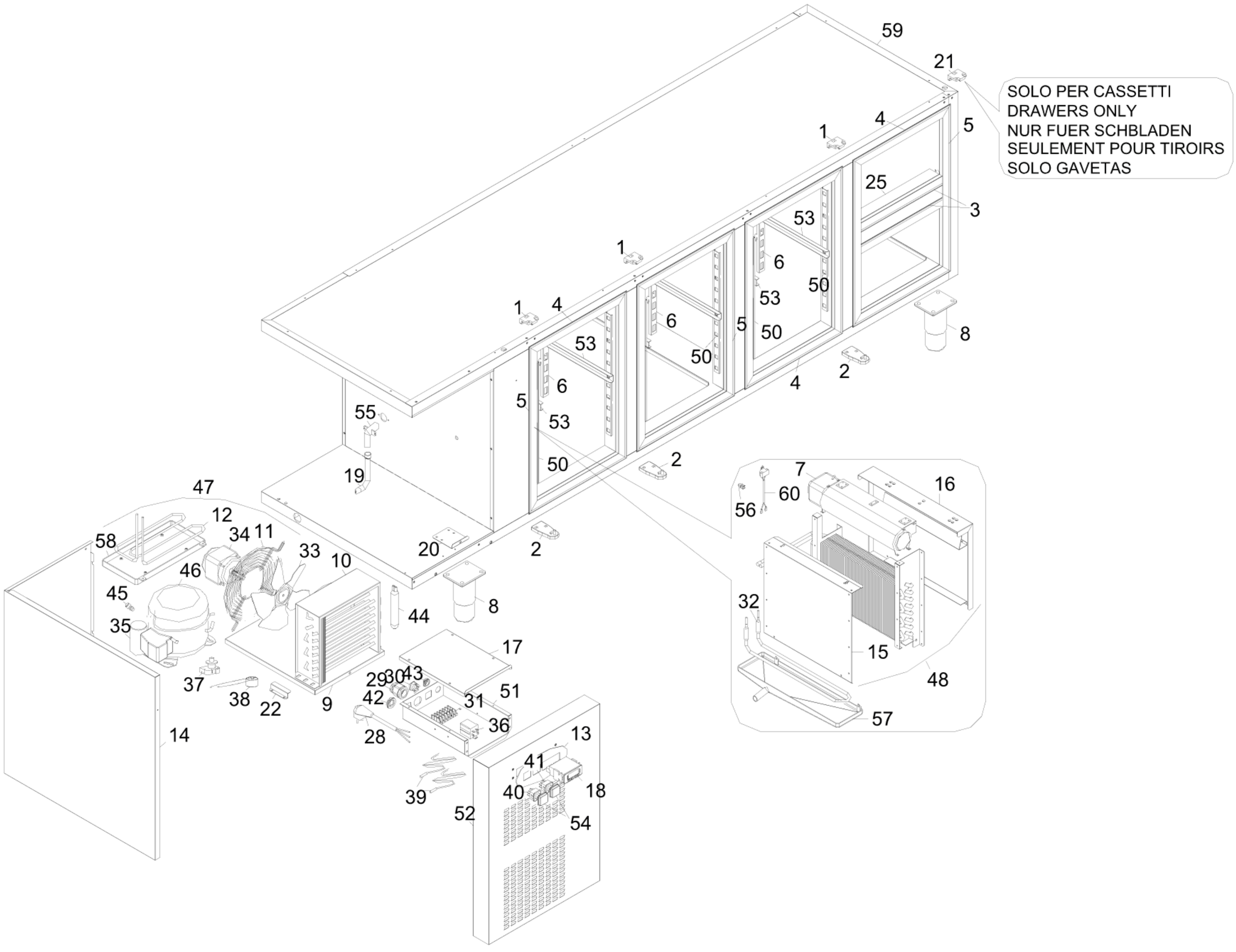

SAGI - BASE REFRIGERATA 530 lt,prof.70 cm, -2/+8°C
KIC4A - A000330 - GRUPPO PORTE-CASSETTI - 25-07-2006 » 29-06-2007

Modello Typ Model Modele Modelo

		KUA KUAA KUAM KIA KIAA KIAM KIAB KIABA KIABM	KUA2 KUA2A KUA2M KIA2 KIA2A KIA2M - - -	- - - KIA13 KIA13A KIA13M - - -	- - - KIA11 KIA11A KIA11M - - -	KUB KUBA KUBM KIB KIBA KIBM KIBB KIBBA KIBBM	KUB2 KUB2A KUB2M KIB2 KIB2A KIB2M - - -	KUB4 KUB4A KUB4M KIB4 KIB4A KIB4M - - -	KUB11 KUB11A KUB11M KIB11 KIB11A KIB11M - - -	- - - KIB13 KIB13A KIB13M - - -	- - - KIB22 KIB22A KIB22M - - -	KUC KUCA KUCM KIC KICA KICM KICB KICBA KICBM	KUC2 KUC2A KUC2M KIC2 KIC2A KIC2M - - -	KUC4 KUC4A KUC4M KIC2 KIC2A KIC2M - - -	KUC11 KUC11A KUC11M KIC2 KIC2A KIC2M - - -	- - - KIC13 KIC13A KIC13M - - -	- - - KIC22 KIC22A KIC22M - - -
Num.cassetti Schublad Drawers Tiroirs Gabetas	1/2SUP 1/2INF 1/3 2/3	- - - -	1 1 - -	- - 3 -	- - 1 1	- - - -	1 1 - -	2 2 - -	- - 1 1	- - 3 -	- - 2 2	- - - -	1 1 - -	2 2 - -	- - 1 1	- - 3 -	- - 2 2
Porte Türen Doors Portes Puertas		2	1	1	1	3	2	1	2	2	1	4	3	2	3	3	2

