SD 80 SC/M 70

R 22 A VERSION

SPARE PARTS LIST
CATALOGORIAMBI
CATALOGUE PIÈCES DÉTACHÉES
ERSATZTEILENKATALOG

REV. 01/1991

SD80 - SD80W - SC70 - SC70W - SM70 - SM70W

01 - 91

TAVOLA **1**

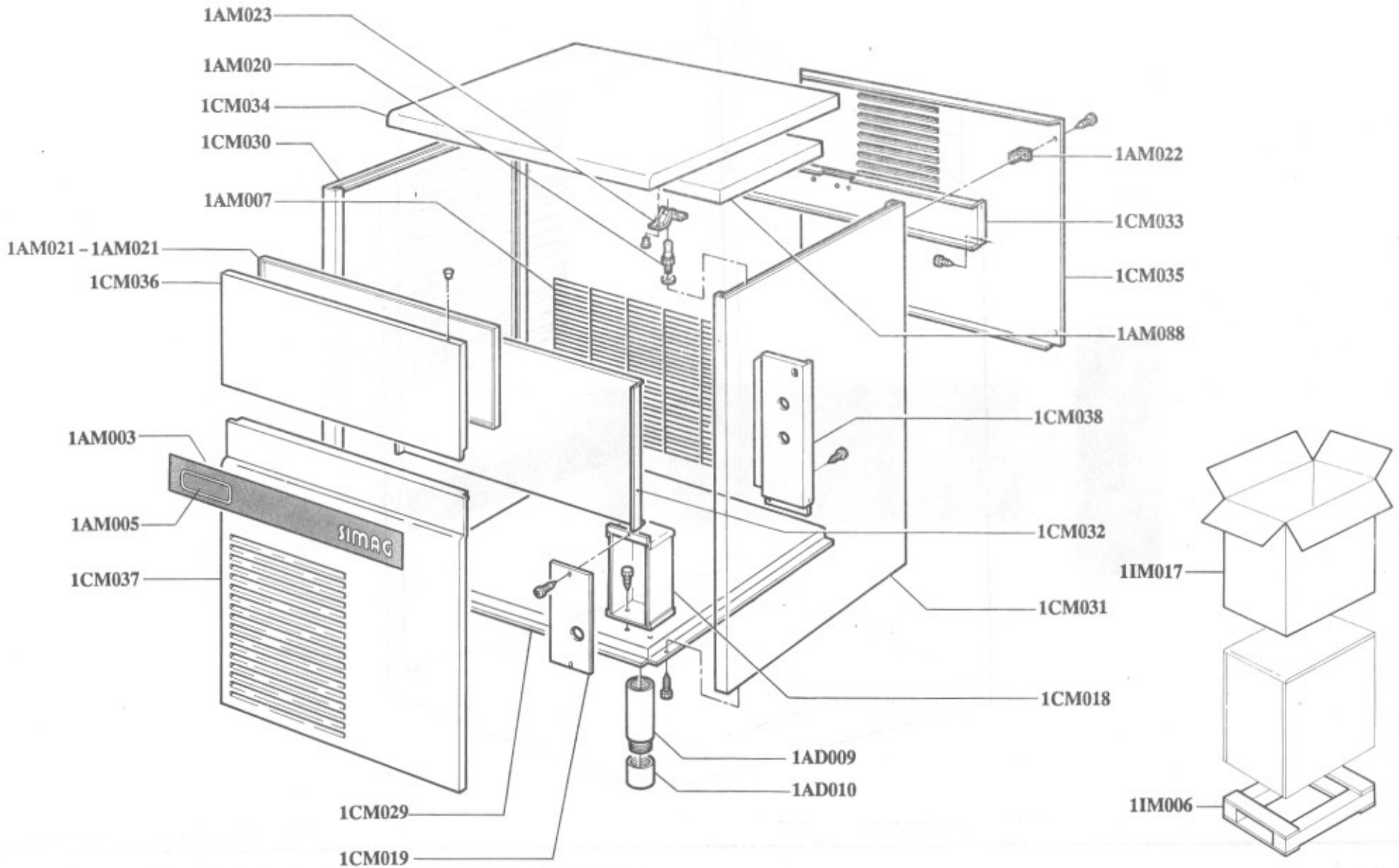

SD80 - SD80W - SC70 - SC70W - SM70 - SM70W

01 - 91

TAVOLA 1

COD.	DESCRIZIONE	DENOMINATION	DESCRIPTION	BESCHREIBUNG	DESCRIPCION
1AD009	Piede di supporto	*Pied*	Foot	*Gerätefuss*	Pie soporte
1AD010	Piede regolabile	*Pied règlable*	Levelling foot	*Gerätefuss*	Pie regulable
1AM003	Targa serigrafata	*Plaquette marque*	Name plate facia	*Markenschild*	Banda Simag
1AM005	Targhetta modello	*Plaquette d'identification*	Model badge	*Modellbezeichnung*	Etiqueta modelo
1AM007	Griglia posteriore	*Grille postérieure*	Rear grill	*Hinteres Belüftungssgitter*	Rejilla posterior
1AM020	Perno	*Axe*	Stud	*Stift*	Perno
1AM021	Controsportello	*Contreporte*	Door internal plate	*Hintere Seite Entnahmeklappe*	Contrapuerta
1AM022	Piastrine angolari	*Plaquette angulaires*	Retaining bracket	*Eckhalterung*	Ángulo
1AM023	Molla	*Ressort*	Retainer	*Feder*	Pinza perno
1AM088	Pannello isolante	*Panneau isolant*	Top panel insulation	*Isolierung*	Panel aislamiento
1CM018	Scatola elettrica	*Boîtier électrique*	Electrical box	*Schaltkasten*	Caja eléctrica
1CM019	Coperchio sc. elettrica	*Couvercle boîtier elec.*	Cover electrical box	*Deckel Schaltkasten*	Tapa caja eléctrica
1CM029	Piastra di base	*Plaque de base*	Base	*Grundplatte*	Base
1CM030	Fiancata sinistra	*Joue gauche*	Left side panel	*Linke Gehäuseseite*	Lateral izquierdo
1CM031	Fiancata destra	*Joue droite*	Right side panel	*Rechte Gehäuseseite*	Lateral derecho
1CM032	Traverso anteriore	*Traverse antérieure*	Front support	*Vordere Verbindungsstrebe*	Soporte frontal
1CM033	Traverso supp. pompa	*Traverse support pompe*	Pump support panel	*Halterung Pumpe*	Soporte sup. bomba
1CM034	Coperchio	*Couvercle*	Top panel	*Deckel*	Tapa superior
1CM035	Pannello posteriore	*Panneau postérieur*	Rear panel	*Hintere Abdeckung*	Panel posterior
1CM036	Sportello	*Porte*	Door	*Entnahmeklappe*	Puerta
1CM037	Pannello anteriore	*Panneau frontal*	Front panel	*Vordere Gehäuseabdeckung*	Panel frontal
1CM038	Supporto scarico	*Support vidange*	Exhaust support	*Auslaufhalterung*	Soporte conexiones
1IM006	Base imballo	*Socle*	Pallet	*Palette*	Palet
1IM017	Scatola imballo	*Caisse carton*	Carton	*Karton*	Embalaje

SD80 - SD80W - SC70 - SC70W - SM70 - SM70W

01 - 91

TAVOLA 2

COD.	DESCRIZIONE	DENOMINATION	DESCRIPTION	BESCHREIBUNG	DESCRIPCION
1AC012	Filtro aspirazione pompa	*Filtre aspiration pompe*	Pump feeding filter	*Pumpenansaugfilter*	Filtro asp. bomba
1AC013	Rondella	*Rondelle*	Washer	*Unterlegscheibe*	Arandela
1AC014	Rondella	*Rondelle*	Washer	*Unterlegscheibe*	Arandela
1AC016	Dado	*Ecrou*	Nut	*Mutter*	Tuerca
1AC017	Dado	*Ecrou*	Nut	*Mutter*	Tuerca
1AC029	Racc. aspirazione pompa	*Raccord aspiration pompe*	Pump feeding pipe-fitting	*Ansauganschlusstück*	Racord asp. bomba
1AC030	Racc. mandata pompa	*Raccord refoulement pompe*	Pump inlet water pipe-fitting	*Pumpenabflussanschlusstück*	Racord. imp. bomba
1ID006	Tubo mandata pompa	*Tuyau de refoulement pompe*	Pump inlet water pipe	*Pumpenabflusschlauch*	Tubo impul. bomba
1ID007	Tubo aspirazione pompa	*Tuyau d'aspiration pompe*	Pump feeding pipe	*Pumpenansaugschlauch*	Tubo asp. bomba
1ID009	Pompa	*Pompe*	Pump	*Pumpe*	Bomba
1ID010	Tappo per collettore	*Bouchon pour collecteur*	Plug manifold	*Stopfen*	Tapón colector
1ID011	Tubo alimentazione collettore	*Tuyau d'alimentation eau*	Spray bar feeding pipe	*Anschlusschlauch Kollektor*	Tubo aliment. dist.
1ID026	Spruzzatori	*Gicleurs*	Sprayers	*Sprühdüsen*	Aspersores
1ID042	Anello O.R.	*Joint torique*	O-ring	*O-ring*	Junta
1ID043	Isolamento pompa	*Coupelle pour pompe*	Pump cover insulation	*Pumpenisolierung*	Aislamiento bomba
1ZA046 SD80	Collettore	*Collecteur*	Spray bar	*Kollektor*	Colector
1ZA049 SC70	Collettore	*Collecteur*	Spray bar	*Kollektor*	Colector
1ZA052 SM70	Collettore	*Collecteur*	Spray bar	*Kollektor*	Colector

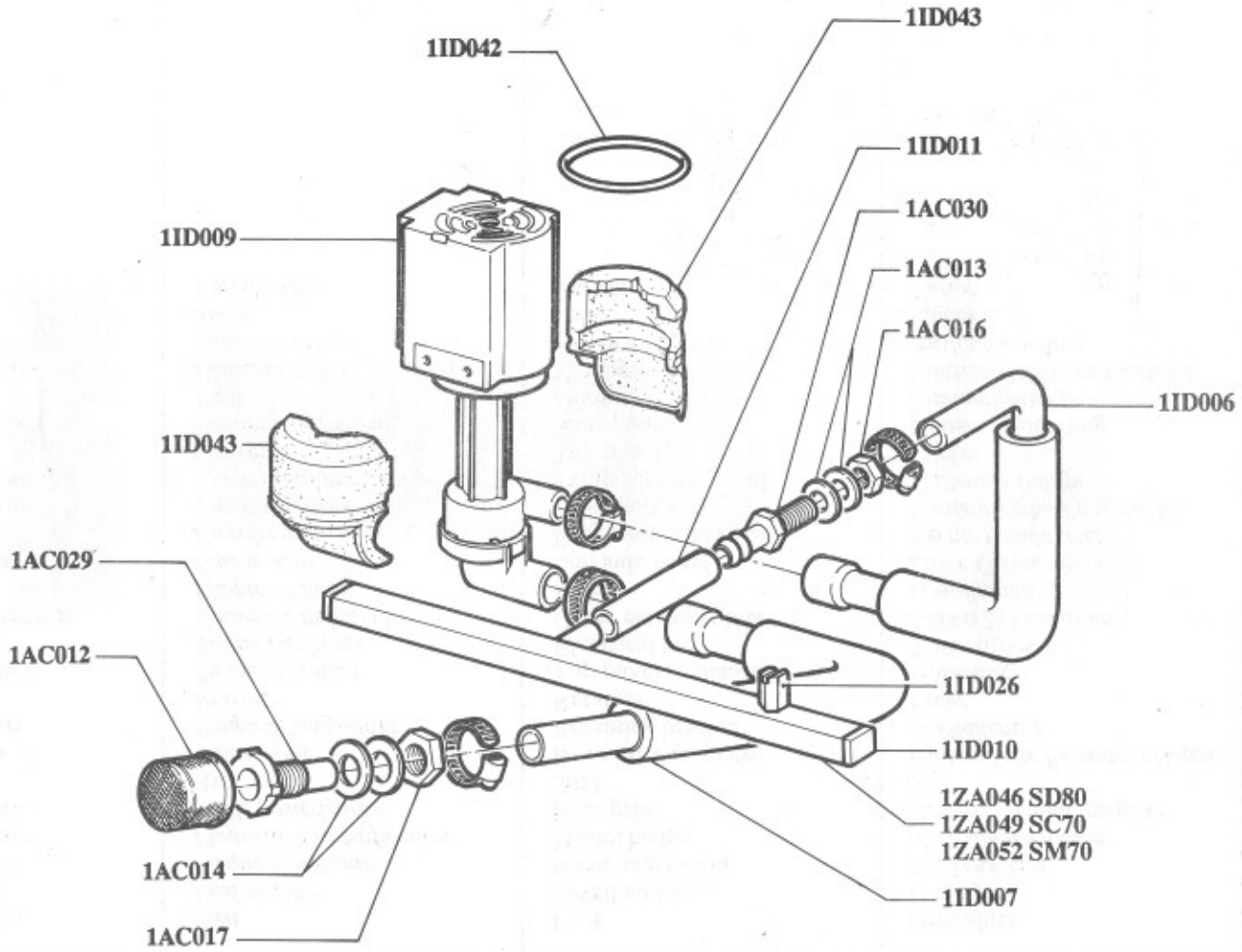
1ID042
1ID043
1ID011
1AC030
1AC013
1AC016
1ID009
1ID006
1ID043
1AC029
1AC012
1ID026
1ID010
1ZA046 SD80
1ZA049 SC70
1ZA052 SM70
1AC014
1ID007
1AC017

SD80 - SD80W - SC70 - SC70W - SM70 - SM70W

01 - 91

TAVOLA **2**

COD.	DESCRIZIONE	DENOMINATION	DESCRIPTION	BESCHREIBUNG	DESCRIPCION
1AC012	Filtro aspirazione pompa	*Filtre aspiration pompe*	Pump feeding filter	*Pumpenansaugfilter*	Filtro asp. bomba
1AC013	Rondella	*Rondelle*	Washer	*Unterlegscheibe*	Arandela
1AC014	Rondella	*Rondelle*	Washer	*Unterlegscheibe*	Arandela
1AC016	Dado	*Ecrou*	Nut	*Mutter*	Tuerca
1AC017	Dado	*Ecrou*	Nut	*Mutter*	Tuerca
1AC029	Racc. aspirazione pompa	*Raccord aspiration pompe*	Pump feeding pipe-fitting	*Ansauganschlusstück*	Racord asp. bomba
1AC030	Racc. mandata pompa	*Raccord refoulement pompe*	Pump inlet water pipe-fitting	*Pumpenabflussanschlusstück*	Racord. imp. bomba
1ID006	Tubo mandata pompa	*Tuyau de refoulement pompe*	Pump inlet water pipe	*Pumpenabflusschlauch*	Tubo impul. bomba
1ID007	Tubo aspirazione pompa	*Tuyau d'aspiration pompe*	Pump feeding pipe	*Pumpenansaugschlauch*	Tubo asp. bomba
1ID009	Pompa	*Pompe*	Pump	*Pumpe*	Bomba
1ID010	Tappo per collettore	*Bouchon pour collecteur*	Plug manifold	*Stopfen*	Tapón colector
1ID011	Tubo alimentazione collettore	*Tuyau d'alimentation eau*	Spray bar feeding pipe	*Anschlusschlauch Kollektor*	Tubo aliment. dist.
1ID026	Spruzzatori	*Gicleurs*	Sprayers	*Sprühdüsen*	Aspersores
1ID042	Anello O.R.	*Joint torique*	O-ring	*O-ring*	Junta
1ID043	Isolamento pompa	*Coupelle pour pompe*	Pump cover insulation	*Pumpenisolierung*	Aislamiento bomba
1ZA046 SD80	Collettore	*Collecteur*	Spray bar	*Kollektor*	Colector
1ZA049 SC70	Collettore	*Collecteur*	Spray bar	*Kollektor*	Colector
1ZA052 SM70	Collettore	*Collecteur*	Spray bar	*Kollektor*	Colector

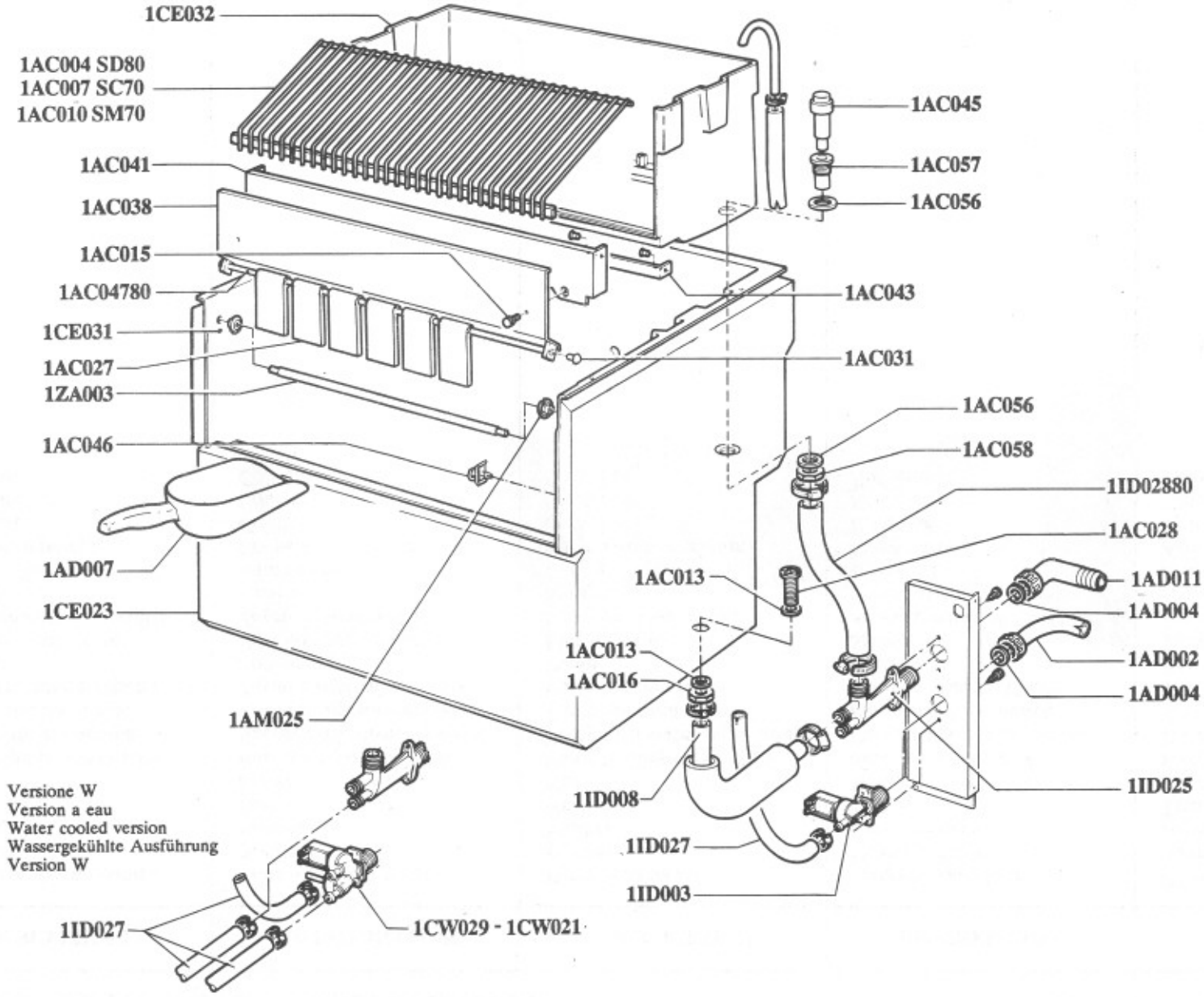
1CE032
1AC004 SD80
1AC007 SC70
1AC010 SM70
1AC041
1AC038
1AC015
1AC04780
1CE031
1AC027
1ZA003
1AC046
1AD007
1CE023
1AM025
1AC045
1AC057
1AC056
1AC043
1AC031
1AC056
1AC058
1ID02880
1AC028
1AC013
1AD011
1AD004
1AD002
1AD004
1AC013
1AC016
1ID008
1ID025
1ID027
1ID003
Versione W
Version a eau
Water cooled version
Wassergekühlte Ausführung
Version W
1ID027
1CW029 - 1CW021

SD80 - SD80W - SC70 - SC70W - SM70 - SM70W

01 - 91

TAVOLA 3

COD.	DESCRIZIONE	DENOMINATION	DESCRIPTION	BESCHREIBUNG	DESCRIPCION
1AC004 SD80	Griglia scorrimento cubetti	*Grille glissement glaçons*	Cube deflector	*Abgleitgrill*	Rejilla caida cubitos
1AC007 SC70	Griglia scorrimento cubetti	*Grille glissement glaçons*	Cube deflector	*Abgleitgrill*	Rejilla caida cubitos
1AC010 SM70	Griglia scorrimento cubetti	*Grille glissement glaçons*	Cube deflector	*Abgleitgrill*	Rejilla caida cubitos
1AC013	Rondella	*Rondelle*	Washer	*Unterlegscheibe*	Arandela
1AC015	Vite godronata	*Vis moletée*	Knurled screw	*Schraube*	Tornillo
1AC016	Dado	*Ecrou*	Nut	*Mutter*	Tuerca
1AC027	Bandierina	*Lamelle*	Spray curtain flap	*Abdeckklappe*	Aleta
1AC028	Racc. scarico contenitore	*Raccord vidange conteneur*	Bin exhaust pipe fitting	*Anschlüsstück Behälter*	Racord desag. deposito
1AC031	Bottone	*Bouton*	Bar pins	*Befestigung Achse*	Tapón
1AC038	Supporto bandierine	*Support lamelles*	Spray curtain support	*Abdeckklappen Halterung*	Soporte aletas
1AC041	Supporto evaporatore	*Support évaporateur*	Evaporator support	*Verdampferauflage*	Soporte evaporador
1AC043	Supporto cella	*Support chambre*	Bin support	*Halterung Innenbehälter*	Soporte cuba
1AC045	Troppo pieno	*Trop-plein*	Overflow exhaust pipe	*Überlauf*	Rebosadero
1AC046	Fermatubo	*Attache de tube*	Pipe fixing	*Behälterthermostathalter.*	Fijación tubos
1AC04780	Tubo ottone	*Tube en laiton*	Spray curtain bar	*Abdeckklappenhalter.*	Barra aletas
1AC056	Rondella	*Rondelle*	Washer	*Unterlegscheibe*	Arandela
1AC057	Raccordo scarico t. pieno	*Raccord écoulem. trop-plein*	Overflow exhaust	*Überlaufrohr*	Racord desag. rebosad
1AC058	Dado	*Ecrou*	Nut	*Mutter*	Tuerca
1AD002	Tubo alimentazione acqua	*Tuyau d'alimentation eau*	Water supply pipe	*Wasseranschlusschlauch*	Tubo aliment. agua
1AD004	Guarnizione	*Joint*	Gasket	*Dichtung*	Junta
1AD007	Sessola	*Sasse*	Ice scoop	*Eisschaufel*	Pala
1AD011	Curva con ghiera	*Coude avec bague*	Elbow with ring nut	*Krümmer*	Codo
1AM025	Passatubo	*Passe-tuyau*	Retainer for door bar	*Halterung*	Pasatubo
1CE023	Isolamento cella	*Isolation*	Insulation	*Isolierung*	Aislamiento
1CE031	Cella esterna	*Chambre extérieure*	Bin	*Zelle extern*	Cuba
1CE032	Cella interna	*Chambre intérieure*	Bin	*Zelle intern*	Cubeta interna
1CW021	Regolatore	*Regolateur*	Regulator	*Regler*	Restrictor
1CW029	Elettrovalvola doppia	*Electrovanne double*	Double electric valve	*Elektroventil*	Electroválvula doble
1ID003	Elettrovalvola	*Electrovanne*	Electric valve	*Electromagnetventil*	Electroválvula
1ID008	Tubo scarico contenitore	*Tuyau widange conteneur*	Bin exhaust pipe	*Behälterauslaufschlauch*	Tubo desag. depósito
1ID025	Scarico acqua	*Ecoulement eau*	Water exhaust	*Wasserablauf*	Desagüe
1ID027	Tubo	*Tube.*	Pipe	*Schlauch*	Tubo
1ID02880	Tubo	*Tube*	Pipe	*Schlauch*	Tubo
1ZA003	Asta sportello	*Tige porte*	Door support bar	*Klappenachse*	Tubo soporte puerta

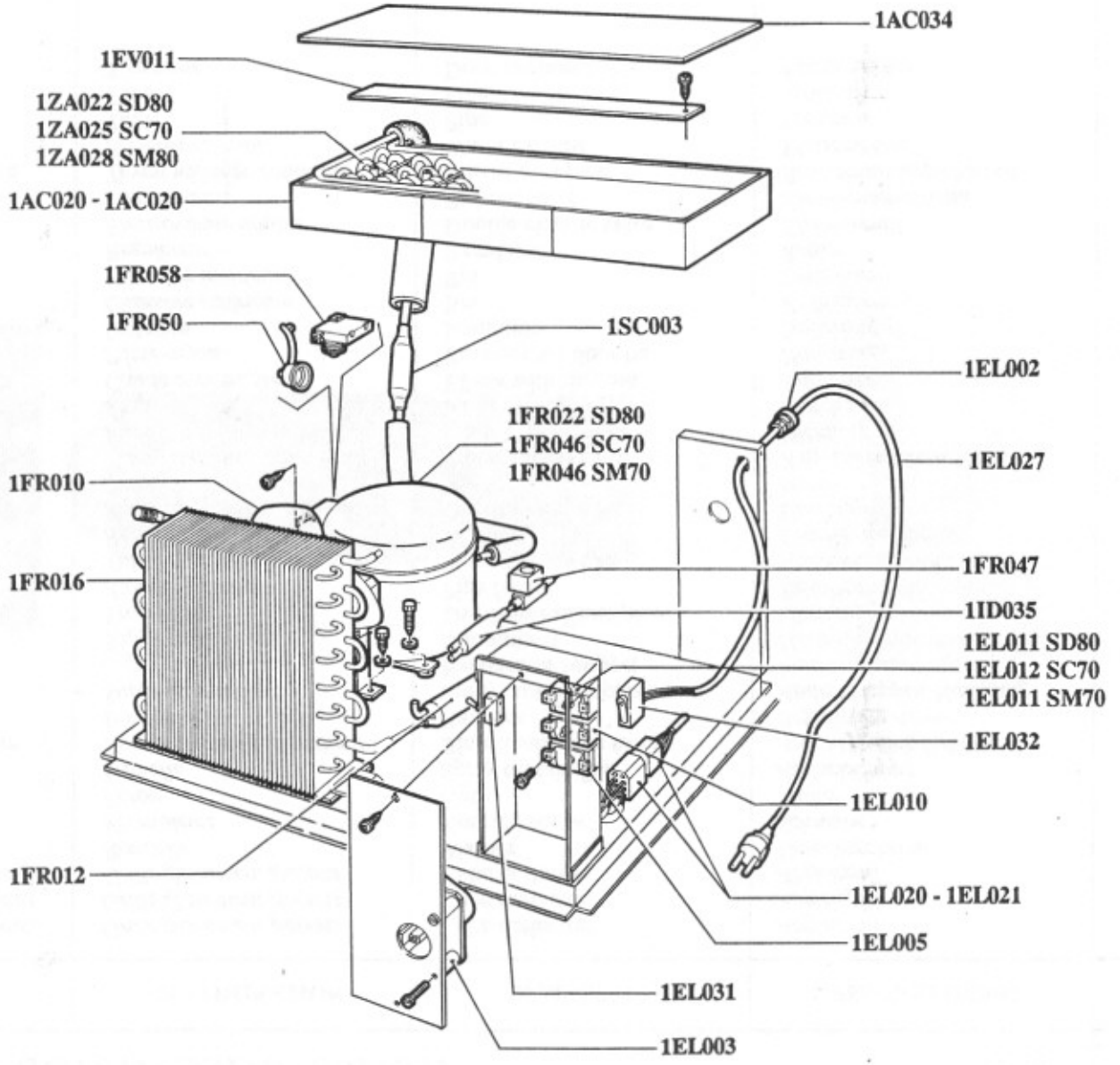
1AC034
1EV011
1ZA022 SD80
1ZA025 SC70
1ZA028 SM80
1AC020 - 1AC020
1FR058
1FR050
1SC003
1EL002
1FR022 SD80
1FR046 SC70
1FR046 SM70
1EL027
1FR010
1FR016
1FR047
1ID035
1EL011 SD80
1EL012 SC70
1EL011 SM70
1EL032
1EL010
1FR012
1EL020 - 1EL021
1EL005
1EL031
1EL003

SD80 - SC70 - SM70

01 - 91

TAVOLA 4

COD.	DESCRIZIONE	DENOMINATION	DESCRIPTION	BESCHREIBUNG	DESCRIPCION
1AC020	Guarnizione evaporatore	*Joint d'évaporateur*	Evaporator packing	*Verdampferdichtung*	Bandeja evaporador
1AC034	Coprievaporatore	*Cache-évaporateur*	Evaporator top	*Verdampferabdeckung*	Tapa evaporador
1EL002	Fissacavo	*Serre-câble*	Cable terminal ring	*Kabelklemme*	Tuerca fijación cab.
1EL003	Timer	*Minuterie*	Timer	*Timer*	Temporizador
1EL005	Pressostato	*Pressostat*	Pressure gauge	*Druckwächter*	Presostato
1EL010	Termostato contenitore	*Thermostat conteneur*	Bin thermostat	*Behälterthermostat*	Termostato depósito
1EL011 SD80	Termostato evaporatore	*Thermostat évaporateur*	Evaporator thermostat	*Verdampferthermostat*	Termostato evaporador
1EL011 SM70	Termostato evaporatore	*Thermostat évaporateur*	Evaporator thermostat	*Verdampferthermostat*	Termostato evaporador
1EL012 SC70	Termostato evaporatore	*Thermostat évaporateur*	Evaporator thermostat	*Verdampferthermostat*	Termostato evaporador
1EL020	Cablaggio	*Câblage*	Wiring	*Verkabelung*	Cableado
1EL021	Cablaggio	*Câblage*	Wiring	*Verkabelung*	Cableado
1EL027	Cavo alimentazione	*Câble d'alimentation*	Electric cable	*Kabel*	Cable alimentación
1EL031	Interruttore	*Interrupteur*	Switch	*Schalter*	Interruptor limpieza
1EL032	Interruttore luminoso	*Interrupteur lumineux*	Switch	*Schalter*	Interruptor ON/OFF
1EV011	Piastrina fiss. evaporatore	*Plaque fixation évaporateur*	Evapor. fastening plate	*Befestigung Verdampfer*	Fijación evaporador
1FR010	Motoventilatore	*Moto-ventilateur*	Electric fan	*Lüfter*	Motoventilador
1FR012	Filtro	*Filtre*	Filter	*Filter*	Filtro
1FR016	Condensatore	*Condenseur*	Air condenser	*Kondensator*	Condensador
1FR022 SD80	Compressore	*Compresseur*	Compressor	*Kompressor*	Compresor
1FR046 SC70	Compressore	*Compresseur*	Compressor	*Kompressor*	Compresor
1FR046 SM70	Compressore	*Compresseur*	Compressor	*Kompressor*	Compresor
1FR047	Elettrovalvola gas	*Electrovanne gaz*	Gas electric valve	*Gas Elektromagnetventil*	Electroválvula gaz
1FR050	Protettore termico	*Protection thermique*	Thermic protector	*Thermoschutz*	Protector térmico
1FR058	Relè avviamento	*Relais démarrage*	Starting relay	*Anlaufrelais*	Relé arranque
1ID035	Filtro meccanico	*Filtre mécanique*	Filtre	*Filter*	Filtro
1SC003	Boiler	*Boiler*	Heat exhanger	*Austauscher*	Intercambiador
1ZA022 SD80	Evaporatore	*Evaporateur*	Evaporator	*Verdampfer*	Evaporador
1ZA025 SC70	Evaporatore	*Evaporateur*	Evaporator	*Verdampfer*	Evaporador
1ZA028 SM70	Evaporatore	*Evaporateur*	Evaporator	*Verdampfer*	Evaporador

SD80W - SC70W - SM70W

01 - 91

TAVOLA 5

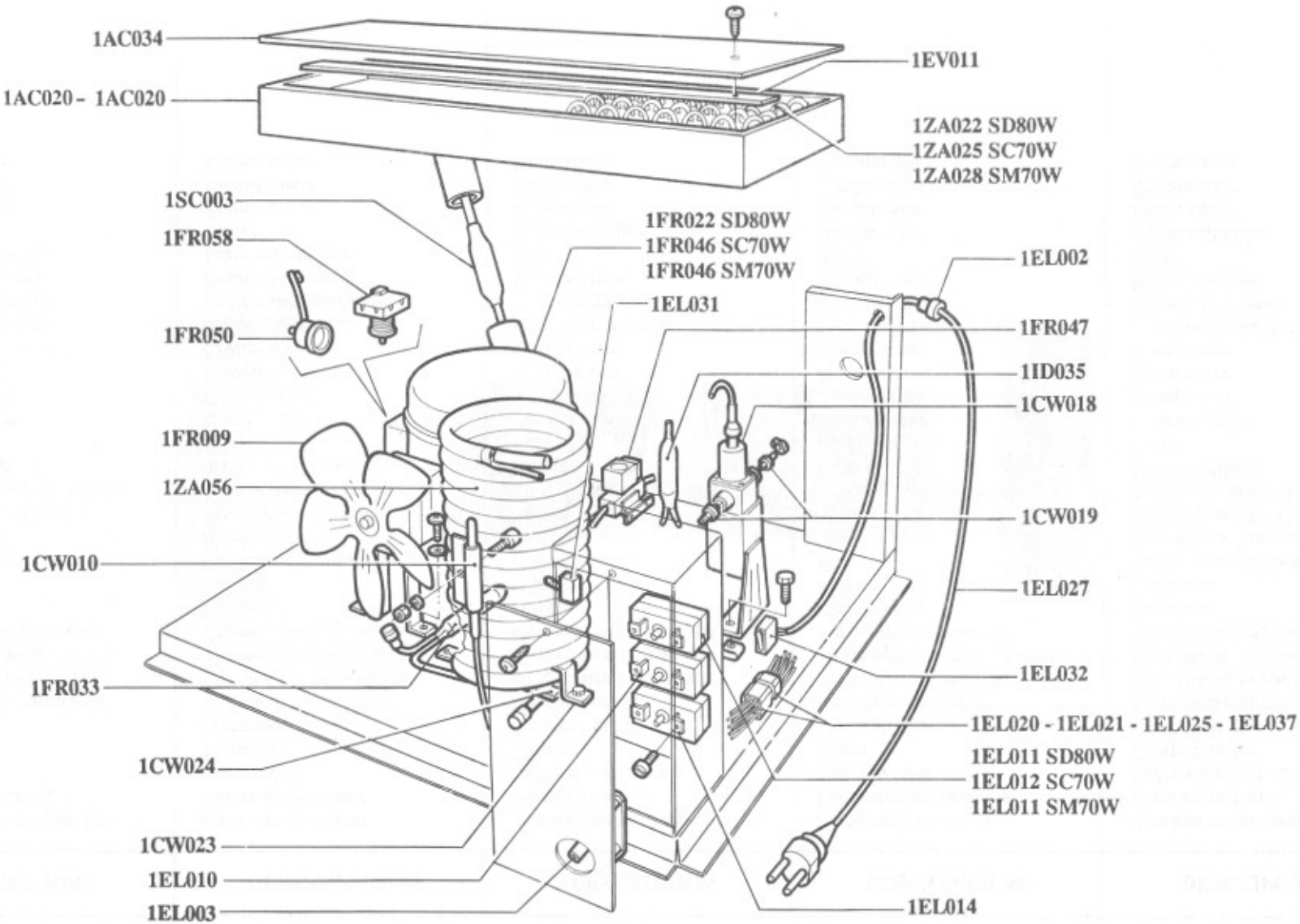

SD80W - SC70W - SM70W

01 - 91

TAVOLA 5

COD.	DESCRIZIONE	DENOMINATION	DESCRIPTION	BESCHREIBUNG	DESCRIPCION
1AC020	Guarnizione evaporatore	*Joint d'évaporateur*	Evaporator packing	*Verdampferdichtung*	Bandeja evaporador
1AC034	Coprievaporatore	*Cache-évaporateur*	Evaporator top	*Verdampferabdeckung*	Tapa evaporador
1CW010	Piastrina bulbo termostato	*Plaquette*	Condenser thermostat bracket	*Thermostatfühler Halterung*	Fij. bulbo termostato
1CW018	Valvola pressostatica	*Soupape pressostatique*	Water valve	*Wasserventil*	Valvula presostatica
1CW019	Portagomma	*Support caoutchouc*	Rubber fixing	*Halterung*	Junta de goma
1CW023	Squadretta fiss. condensatore	*Equerre fixation cond.*	Condenser support	*Kondensator Halterung*	Escuadra fij. cond.
1CW024	Squadretta per condensatore	*Equerre fixation cond.*	Condenser support	*Kondensator Halterung*	Escuadrafij. cond.
1EL002	Fissacavo	*Serre-câble*	Cable terminal ring	*Kabelklemme*	Tuerca fij. cab.
1EL003	Timer	*Minuterie*	Timer	*Timer*	Temporizador
1EL010	Termostato contenitore	*Thermostat conteneur*	Bin thermostat	*Behälterthermostat*	Termostato depósito
1EL011 SD80W	Termostato evaporatore	*Thermostat évaporateur*	Evaporator thermostat	*Verdampferthermostat*	Termostato evaporador
1EL011 SM70W	Termostato evaporatore	*Thermostat évaporateur*	Evaporator thermostat	*Verdampferthermostat*	Termostato evaporador
1EL012 SC70W	Termostato evaporatore	*Thermostat évaporateur*	Evaporator thermostat	*Verdampferthermostat*	Termostato evaporador
1EL014	Termostato condensazione	*Thermostat condensation*	Condenser thermostat	*Verflüssigerthermostat*	Termostato condensador
1EL020	Cablaggio	*Câblage*	Wiring	*Verkabelung*	Cableado
1EL021	Cablaggio	*Câblage*	Wiring	*Verkabelung*	Cableado
1EL025	Cablaggio	*Câblage*	Wiring	*Verkabelung*	Cableado
1EL027	Cavo alimentazione	*Câble d'alimentation*	Electric cable	*Kabel*	Cable alimentación
1EL031	Interruttore	*Interrupteur*	Switch	*Schalter*	Interruptor limpieza
1EL032	Interruttore luminoso	*Interrupteur lumineux*	Switch	*Schalter*	Interruptor ON/OFF
1EL037	Cablaggio	*Câblage*	Wiring	*Verkabelung*	Cableado
1EV011	Piastrina fiss. evaporatore	*Plaque fixation evaporat.*	Evaporat. fastening plate	*Befestigung Verdampfer*	Fijación evaporador
1FR009	Motoventilatore	*Moto-ventilateur*	Electric fan	*Lüfter*	Motoventilador
1FR022 SD80W	Compressore	*Compresseur*	Compressor	*Kompressor*	Compresor
1FR033	Filtro	*Filtre*	Filter	*Filter*	Filtro
1FR046 SC70W	Compressore	*Compresseur*	Compressor	*Kompressor*	Compresor
1FR046 SM70W	Compressore	*Compresseur*	Compressor	*Kompressor*	Compresor
1FR047	Elettrovalvola gas	*Electrovanne gaz*	Gas valve	*Gasventil*	Electroválvula
1FR050	Protettore termico	*Protection thermique*	Thermic protector	*Thermoschutz*	Protector térmico
1FR058	Relè avviamento	*Relais de démarrage*	Starting relay	*Anlaufrelais*	Relé arranque
1ID035	Filtro meccanico	*Filtre mécanique*	Filter	*Filter*	Filtro
1SC003	Boiler	*Boiler*	Heat exchanger	*Austauscher*	Intercambiador
1ZA022 SD80W	Evaporatore	*Évaporateur*	Evaporator	*Verdampfer*	Evaporador
1ZA025 SC70W	Evaporatore	*Évaporateur*	Evaporator	*Verdampfer*	Evaporador
1ZA028 SM70W	Evaporatore	*Évaporateur*	Evaporator	*Verdampfer*	Evaporador
1ZA056	Condensatore	*Condenseur*	Water condenser	*Verflüssiger*	Condensador