SIMAG

SD 80

"J" SERIES

R 134 A VERSION

SPARE PARTS LIST
CATALOGO RICAMBI
CATALOGUE PIÈCES DÉTACHÉES
ERSATZTEILENKATALOG

REV. 07/2006

SD80A - SD80W

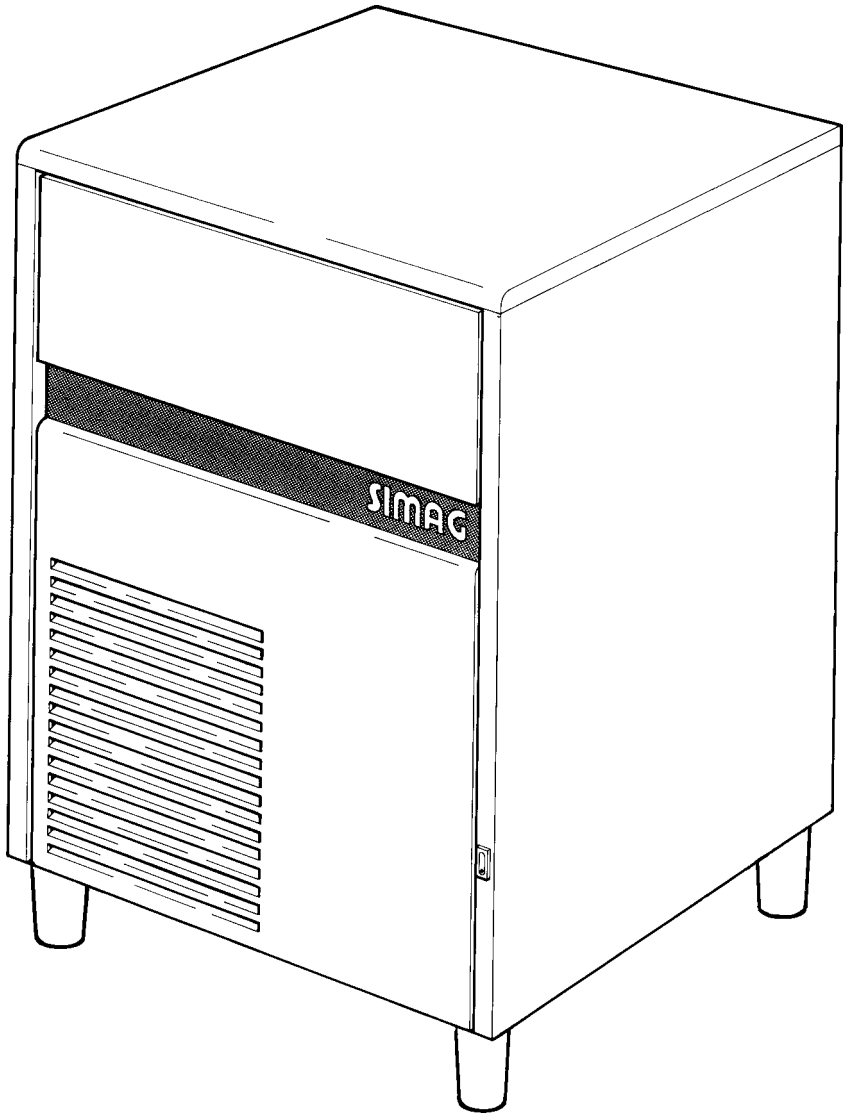

SD80A - SD80W

TAVOLA 1

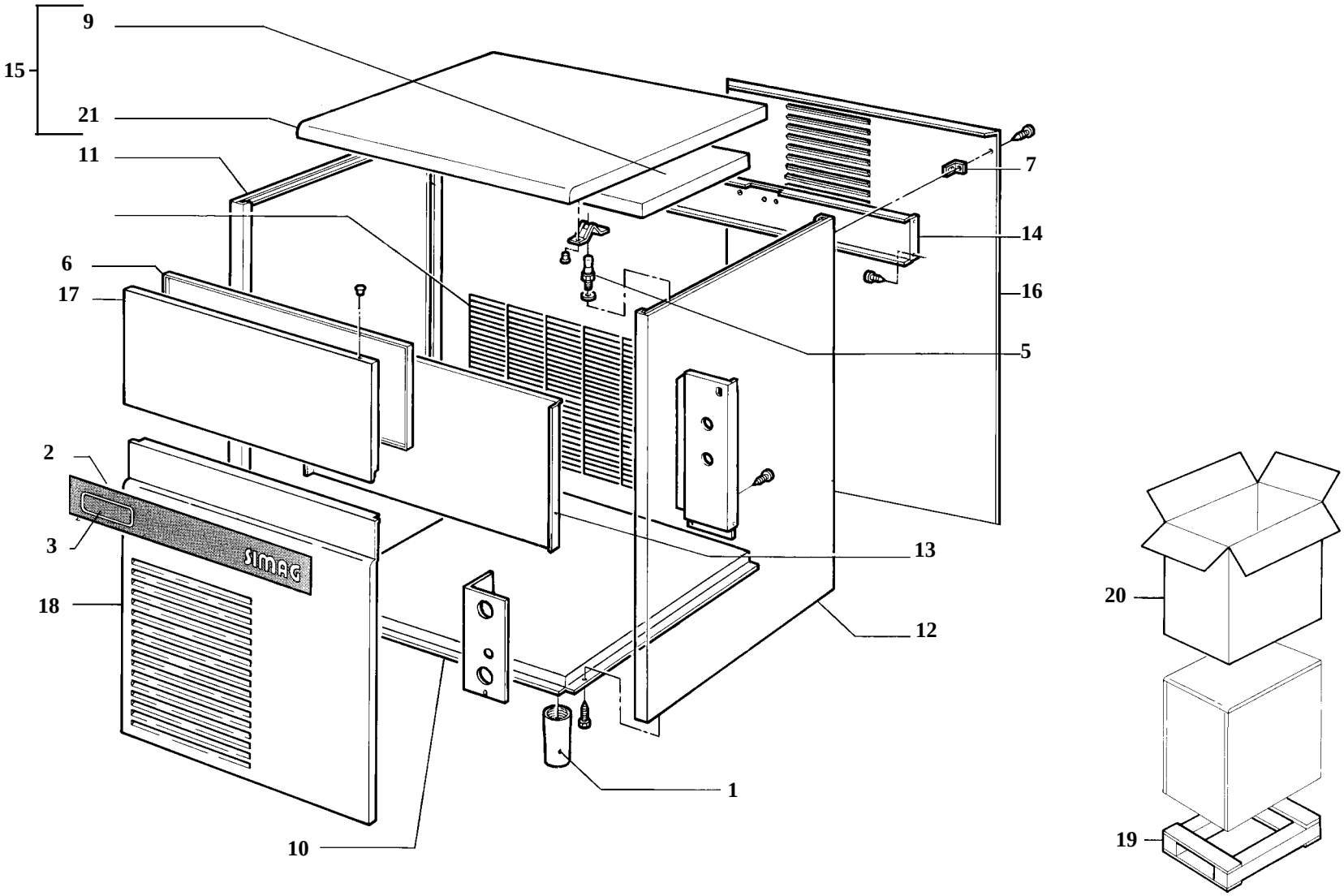

SD80A - SD80W

TAVOLA 1

N	COD.	DESCRIZIONE	*DENOMINATION*	DESCRIPTION	*BESCHREIBUNG*
1	**660638 00**	Piede regolabile	*Pied règlable*	Livelling foot	*Gerätefuss*
2	**650805 00**	Targa serigrafata	*Plaquette marque*	Name plate facia	*Markenschild*
3	**650805 16**	Targhetta modello	*plaquette d'identification*	Model badge	*Modellbezeichnung*
5	**650790 00**	Perno	*Axe*	Stud	*Stift*
6	**660648 00**	Controsportello	*Contreporte*	Door internal plate	*Hintere seite entnahmeklappe*
7	**650806 00**	Perno posteriore	*Axe arriere*	Rear stud	*Träger - Hinten*
9	**Z1AM088**	Pannello isolante	*Panneau isolant*	Top panel insulation	*Isolation*
10	**781406 09**	Assieme basamento	*Ensemble chassis*	Base assy	*Chassis einheit*
11	**721853 00**	Fiancata sinistra	*Joue*	Left side panel	*Linke gehäuseseite*
12	**721852 00**	Fiancata destra	*droite*	Right side panel	*Rechte gehäuseseite*
13	**702330 00**	Traverso ant.	*Traverse antérieure*	Front support	*Vordere verbindungsstrebe*
14	**704289 00**	Traverso supp. pompa	*Traverse support pompe*	Pump support panel	*Halterung pumpe*
15	**781432 03**	Assieme coperchio	*Ens. couvercle*	Top panel assy	*Deckel komplett*
16	**702331 00**	Pannello posteriore	*Panneau postérieur*	Rear panel	*Hintere abdeckung*
17	**060491 25**	Sportello	*Porte*	Door	*Entnahmeklappe*
18	**721855 00**	Pannello anteriore	*Panneau frontal*	Front panel	*Vordere gehäuseabdeckung*
19	**680427 00**	Base imballo	*Socle*	Pallet	*Palette*
20	**680149 04**	Scatola imballo	*Caisse carton*	Carton	*Karton*
21	**721851 00**	Coperchio	*Couvercle*	Top panel	*Deckel*

SD80A - SD80W

TAVOLA 2

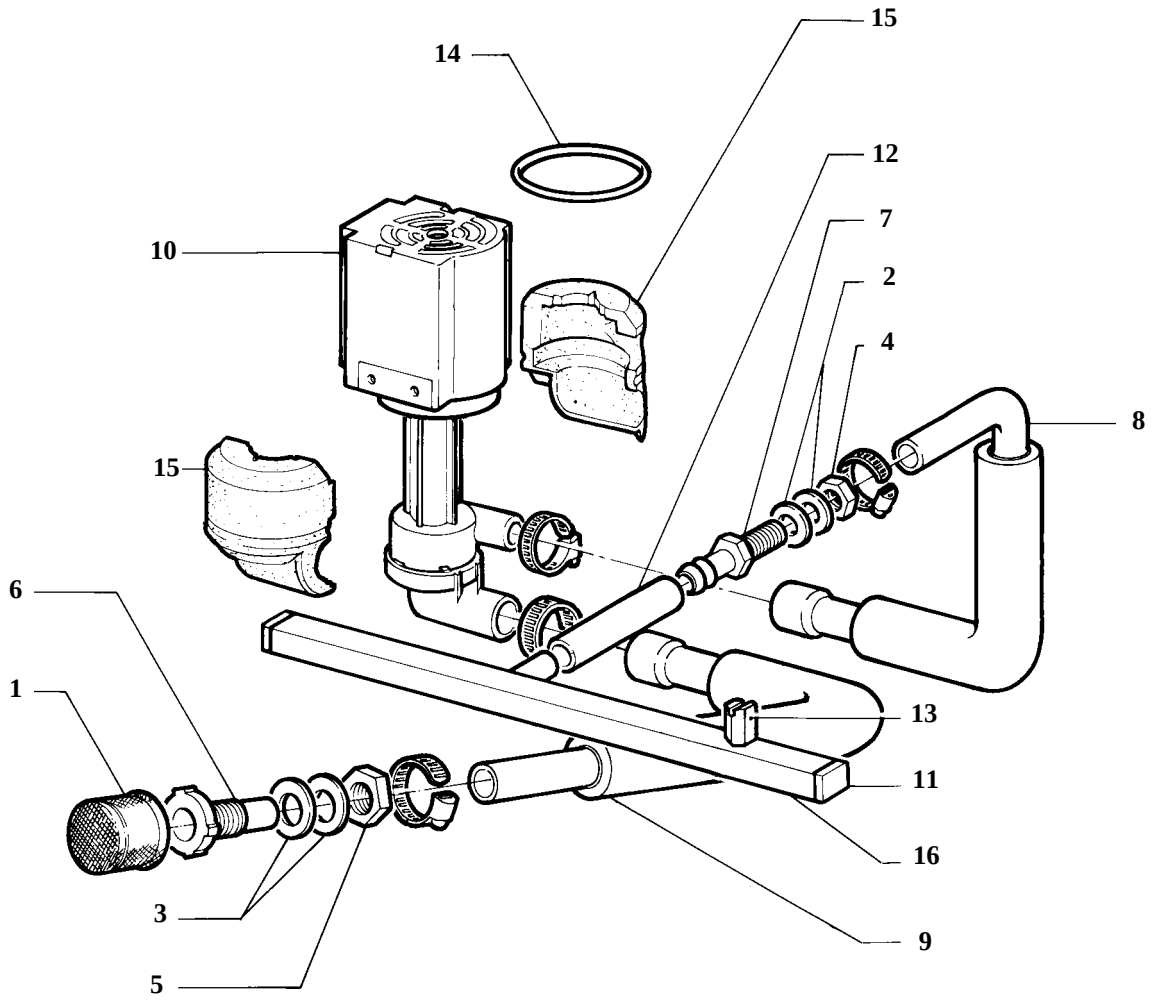

SD80A - SD80W					TAVOLA 2
N	**COD.**	**DESCRIZIONE**	***DENOMINATION***	**DESCRIPTION**	***BESCHREIBUNG***
1	**Z1AC012**	Filtro aspirazione pompa	*Filtre aspiration pompe*	Pump feeding filter	*Pumpenansaugfilter*
2	**Z1AC013**	Rondella	*Rondelle*	Washer	*Unterlegscheibe*
3	**Z1AC014**	Rondella	*Rondelle*	Washer	*Unterlegscheibe*
4	**Z1AC016**	Dado	*Ecrou*	Nut	*Mutter*
5	**Z1AC017**	Dado	*Ecrou*	Nut	*Mutter*
6	**Z1AC029**	Racc. aspirazione pompa	*Raccord aspiration pompe*	Pump feelding pipe-fitting	*Ansauganschlusstück*
7	**Z1AC030**	Racc. mandata pompa	*Raccord refoulement pompe*	Pump inlet water pipe-fitting	*Pumpenabflussanschlusstück*
8	**Z1ID006**	Tubo mandata pompa	*Tuyau de refoulement pompe*	Pump inlet water pipe	*Pumpenabflusschlauch*
9	**610189 01**	Tubo aspirazione pompa	*Tuyau d'aspiration pompe*	Pump feeding pipe	*Pumpenagsaugschlauch*
10	**620415 00**	Assieme pompa	*Ensemble pompe a eau*	Water pump assy	*Wasserpumpe*
11	**660557 00**	Tappo per collettore	*Bouchon pour collecteur*	Plug manifold	*Stopfen*
12	**281830 04**	Tubo alimentazione collettore	*Tuyau d'alimentation eau*	Spray bar feeding pipe	*Anschlusschlauch Kollektor*
13	**660558 00**	Spruzzatori	*Gicleurs*	Sprayers	*Sprühdüsen*
14	**Z1ID042**	Anello O.R.	*Joint torique*	O-ring	*O-ring*
15	**Z1ID043**	Isolamento pompa	*Coupelle pour pompe*	Pump cover insulation	*Pumpenisolation*
16	**650665 08**	Collettore	*Collecteur*	Spray bar	*Kollektor*

SD80A - SD80W

TAVOLA 3

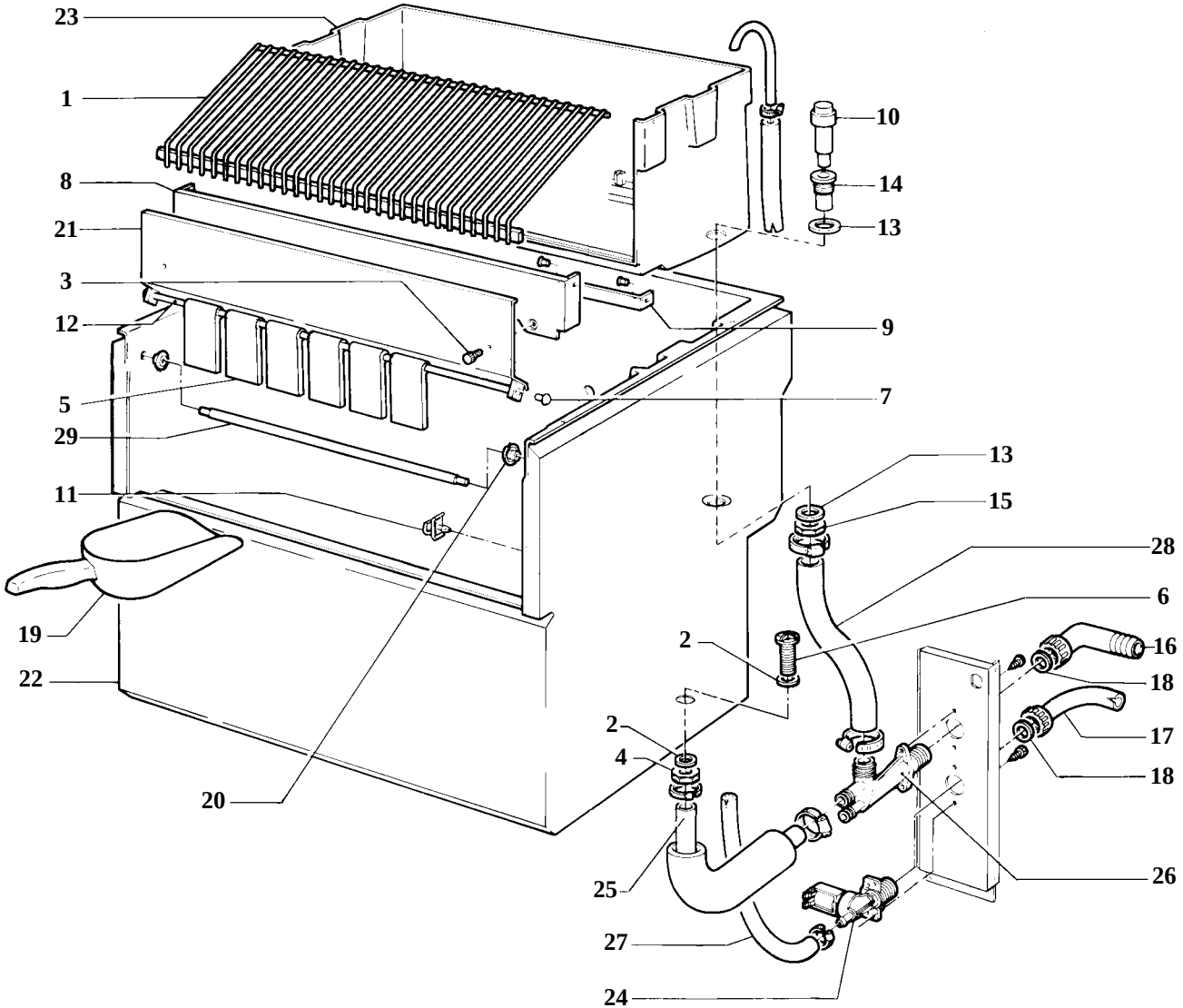

SD80A - SD80W					TAVOLA 3
N	**COD.**	**DESCRIZIONE**	***DENOMINATION***	**DESCRIPTION**	***BESCHREIBUNG***
1	**Z1AC004**	Griglia scorrimento cubetti	*Grille glissement glacons*	Cube deflector	*Abgleit grill*
2	**Z1AC013**	Rondella	*Rondelle*	Washer	*Unterlegscheibe*
3	**Z1AC015**	Vite godronata	*Vis moletée*	Knurled screw	*Schraube*
4	**Z1AC016**	Dado	*Ecrou*	Nut	*Mutter*
5	**660629 00**	Bandierina	*lamelle*	Spray curtain flap	*Abdeckklabbe*
6	**Z1AC028**	Racc. scarico contenitore	*Raccord vidange conteneur*	Bin exhaust pipe fitting	*Anschlüsstüch behälter*
7	**640041 29**	Guarnizione	*Joint torique*	O-ring	*Simmer ring*
8	**724325 00**	Supporto evaporatore	*Support évaporateur*	Evaporator support	*Verdanpferauflange*
9	**722146 01**	Supporto cella	*Support chambre*	Bin support	*Halterung Innenbehälter*
10	**660601 00**	Troppo pieno	*Trop-plein*	Overflow exhaust pipe	*Überlauf*
11	**470019 00**	Vite	*Vis*	Screw	*Schraube*
12	**734328 18**	Tubo ottone	*Tube en laiton*	Spray curtain bar	*Abdeckklappenhalter*
13	**Z1AC056**	Rondella	*Rondelle*	Washer	*Unterlegscheibe*
14	**Z1AC057**	Raccordo scarico t. pieno	*Raccord écoulem. trop-plein*	Overflow exhaust	*Überlaufrohr*
15	**Z1AC058**	Dado ottone M27	*Ecrou M27*	Nut M27	*Mutter M27*
16	**Z1AD011**	Curva con ghiera	*Coude avec bague*	Elbow with ring nut	*Krümmer*
17	**060513 00**	Tubo alimentazione acqua	*Tuyau d'alimentation eau*	Water Supply pipe	*Wasseranschlusschlauch*
18	**640076 13**	Guarnizione	*Joint*	Gasket	*Dichtung*
19	**650146 00**	Sessola	*Sasse*	Ice scoop	*Eisschaufel*
20	**Z1AM025**	Passatubo	*Passe-tuyau*	Retainer for door bar	*Halterung*
21	**060524 09**	Assieme tendina	*Ens. lamelles complet*	Curtain flap assy.	*Jalouise k<omplet*
22	**060524 04**	Kit cella completa	*Kit chambre complète*	Kit bin assy	*Kit zellz komplett*
23	**Z1CE032**	Cella interna	*Chambre extérieure*	Bin	*Zellz intern*
24	**650105 52**	Elettrovalvola	*Electrovanne*	Electric valve	*Electromagnetventil*
25	**610189 00**	Tubo scarico contenitore	*Tuyau widange conteneur*	Bin exhaust pipe	*Behälterauslaufschlauch*
26	**Z1ID025**	Scarico Acqua	*Ecoulement eau*	Water exhaust	*Wasserablauf*
27	**281900 01**	Tubo	*Tube*	Pipe	*Schlauch*
28	**Z1ID028**	Tubo	*Tube*	Pipe	*Schlauch*
29	**Z1AM018**	Asta sportello	*Tige porte*	Door support bar	*Klappenachse*

SD80A

TAVOLA 4

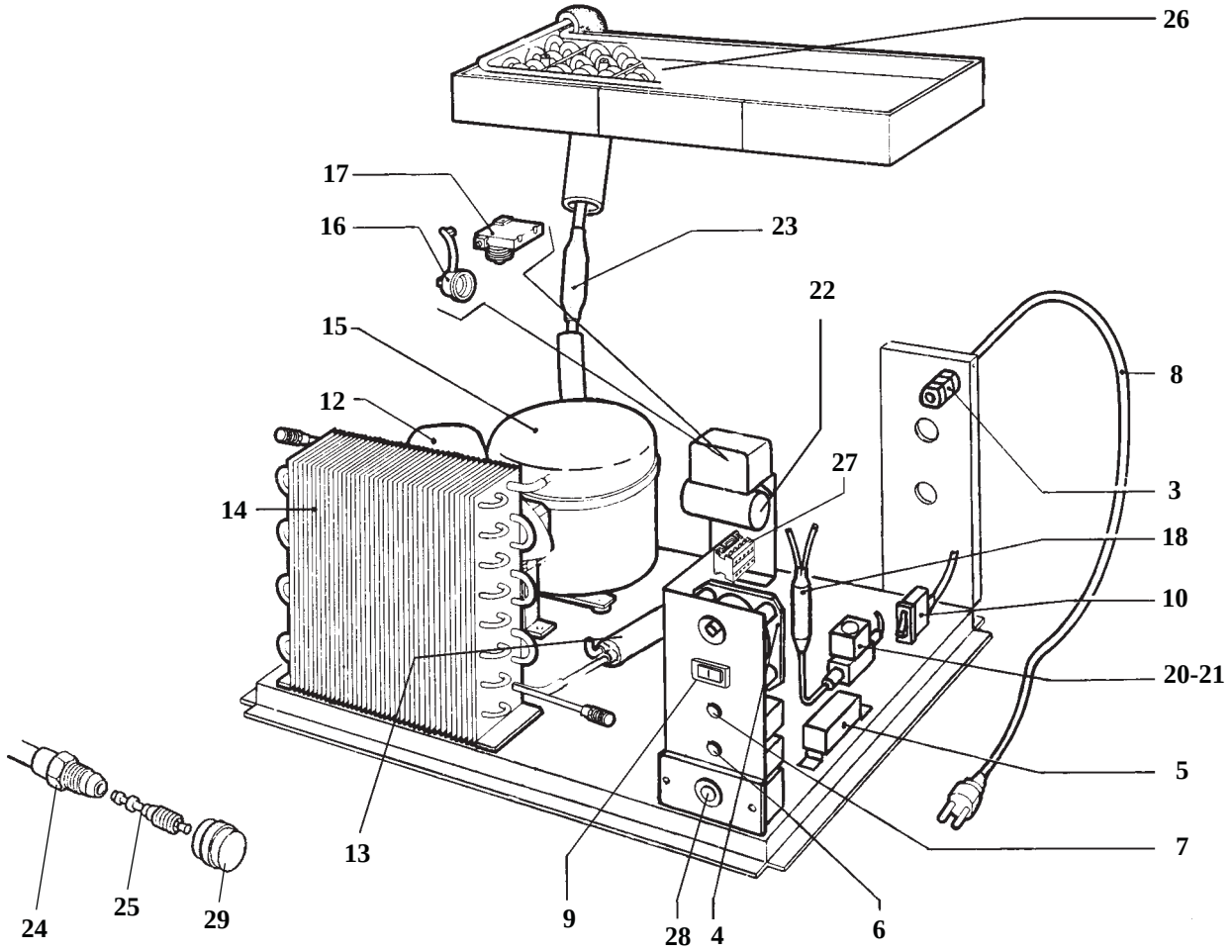

SD80A					TAVOLA 4
N	**COD.**	**DESCRIZIONE**	***DENOMINATION***	**DESCRIPTION**	***BESCHREIBUNG***
3	**630107 00**	Fissacavo	*Serre-câble*	Cable terminal ring	*Kabelklemme*
4	**620441 00**	Timer	*Minuterie*	Timer	*Timer*
5	**620075 00**	Pressostato	*Pressostat*	Pressure gauge	*Druckwächter*
6	**630005 00**	Termostato contenitore	*Thermostat conteneur*	Bin thermostat	*Behälterthermostat*
7	**620201 01**	Termostato evaporatore	*Thermostat évaporateur*	Evaporator thermostat	*Verdampferthermostat*
8	**630136 00**	Cavo alimentazione	*Câble d'alimentation*	Electric cable	*Kabel*
9	**620442 02**	Commutatore	*Interupteur*	Switch	*Umschalter*
10	**620453 00**	Interruttore luminoso	*Interrupteur lumineux*	Switch	*Schalter*
12	**620419 02**	Motoventilatore	*Moto-ventilateur*	Electric fan	*Lüfter*
13	**630137 01**	Filtro	*Filtre*	Filter	*Filter*
14	**620405 00**	Condensatore	*Condenseur*	Air condenser	*Kondensator*
15	**670099 02**	Compressore	*Compresseur*	Compressor	*Kompressor*
16	**620058 39**	Protettore termico	*Protection thermique*	Thermic protector	*Thermoschutz*
17	**620057 44**	Relè avviamento	*Relais démarrage*	Startin relay	*Anlaufrelais*
18	**630003 06**	Filtro meccanico	*Ens.*	Filtre	*Filter*
20	**620306 27**	Corpo valvola	*Corps de vanne*	Valve body	*Vertilgehäuse*
21	**620306 48**	Bobina gas	*Bobine*	Coil	*Heissgas ventilspule*
22	**620167 01**	Condensatore di spunto	*Cpacité demarrage*	Start Capacitor	*Stert Kondensator*
23	**784444 06**	Assieme accumulatore	*Ens. accumulateur*	Accummulator	*Sammler*
24	**650109 00**	Corpo valvola	*Corps de vanne*	Valve body	*Ventilgehause*
25	**670012 00**	Pistoncino valvola	*Piston*	Valve piston	*Ventilkolben*
26	**784482 00**	Evaporatore	*Evaporateur*	Evaporator	*Verdampfer platte*
27	**630119 02**	Contattore	*Contacteur*	Contactor	*Schaltschütz*
28	**620443 02**	Termostato di sicurezza	*Thermostat de securité*	Thermostat-safety	*Sicherheitsthermostat*
29	**650106 00**	Cappuccio valvola	*Capuchon de vanne*	Valve cap	*Ventil klappe*

SD80W	TAVOLA 5

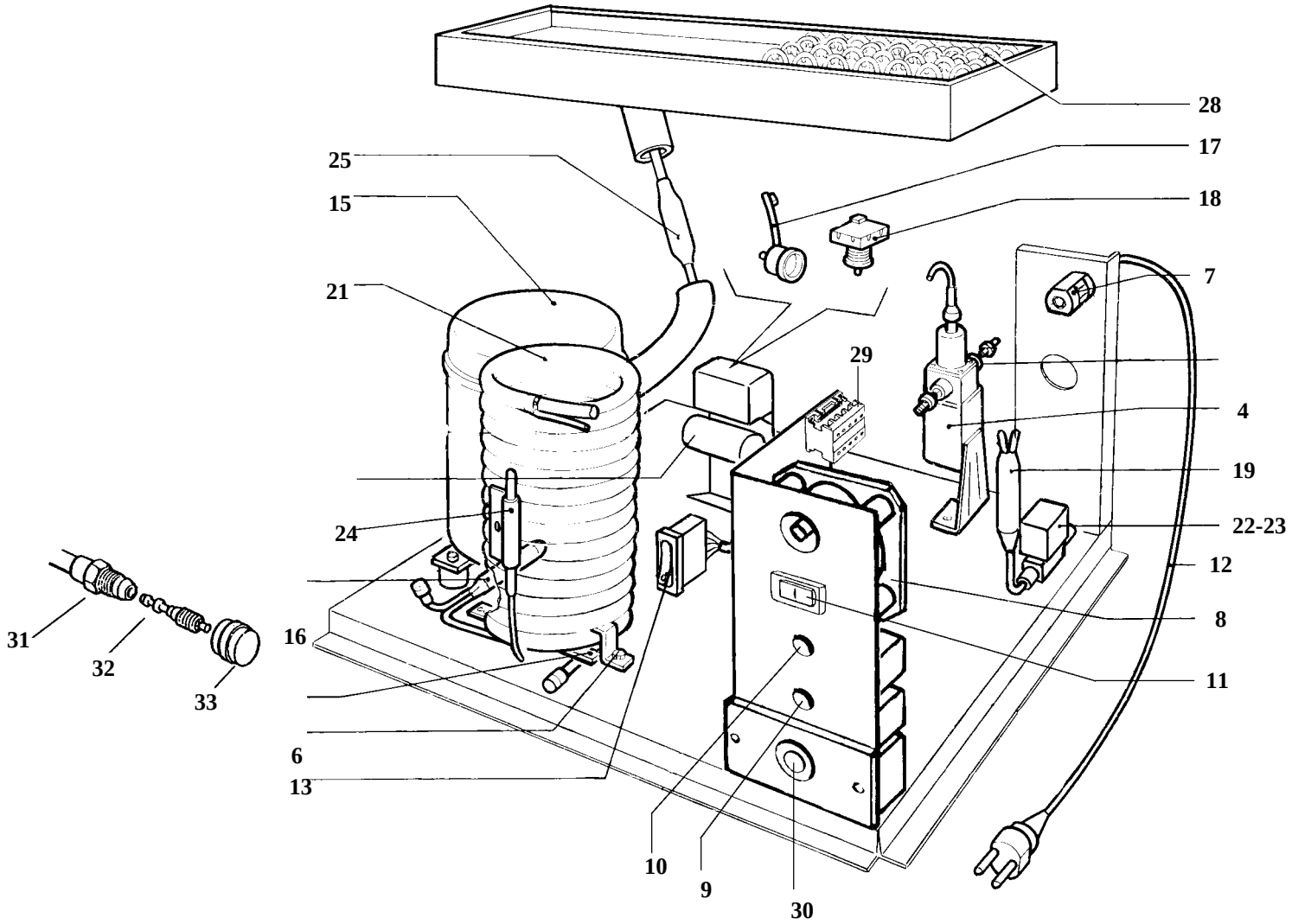

SD80W					TAVOLA 5
N	**COD.**	**DESCRIZIONE**	***DENOMINATION***	**DESCRIPTION**	***BESCHREIBUNG***
4	**620111 00**	Valvola pressostatica	*Soupape pressostatique*	Water valve	*Wasserventil*
5	**Z1CW023**	Squadretta fiss. cond.	*Equerre fixation cond.*	Condenser support	*Kondensator halterung*
6	**Z1CW024**	Squadretta per cond.	*Equerre fixation cond.*	Condenser support	*Kondensator halterung*
7	**630107 00**	Fissacavo	*Serre-câble*	Cable terminal ring	*Kabelklemme*
8	**620441 00**	Timer	*Minuterie*	Timer	*Timer*
9	**630005 00**	Termostato contenitore	*Thermostat conteneur*	Bin thermostat	*Behälterthermostat*
10	**620201 01**	Termostato evaporatore	*Thermostat évaporateur*	Evaporator thermostat	*Verdampferthermostat*
11	**620442 02**	Commutatore	*Interupteur*	Switch	*Umschalter*
12	**630136 00**	Cavo alimentazione	*Câble d'alimentation*	Electric cable	*Kabel*
13	**620453 00**	Interruttore luminoso	*Interrupteur lumineux*	Switch	*Schalter*
15	**670099 02**	Compressore	*Compresseur*	Compressor	*Kompressor*
16	**630137 01**	Filtro	*Filtre*	Filter	*Filter*
17	**620058 39**	Protettore termico	*Protection thermique*	Thermic protector	*Thermoschutz*
18	**620057 44**	Relé avviamento	*Relais de démarrage*	Starting relay	*Anlaufrelais*
19	**630003 06**	Filtro meccanico	*Filtre mécanique*	Filter	*Filter*
21	**620331 00**	Condensatore ad acqua	*Condenseur a eau*	Water condenser	*Wasser kondensator*
22	**620306 27**	Corpo valvola	*Corps de vanne*	Valve body	*Vertilgehäuse*
23	**620306 48**	Bobina gas	*Bobine*	Coil	*Heissgas ventispule*
24	**620167 01**	Condensatore di spunto	*Cpacité demarrage*	Start capacitor	*Stert Kondensator*
25	**784444 06**	Accumulatore	*Accumulateur*	Accumulator	*Sammler*
27	**670012 00**	Pistoncino per valvola	*Piston*	Valve piston	*Ventilkolben*
28	**784482 00**	Piastra evaporatore	*Evaporateur*	Evaporator	*Verdampfer komplett*
29	**630119 02**	Contattore	*Contacteur*	Contactor	*Schaltschütz*
30	**620443 02**	Termostato di sicurezza	*Thermostat de securité*	Thermostat-safety	*Scherheits thermostat*
31	**650109 00**	Corpo valvola	*Corps de vanne*	Valve body	*Ventilgehause*
32	**670012 00**	Pistoncino valvola	*Piston*	Valve piston	*Ventilkolben*
33	**650106 00**	Cappuccio valvola	*Capuchon de vanne*	Valve cap	*Ventilklappe*

SD80 - TABELLA COMPRESSORI - *TABLEAU COMPRESSEUR* - COMPRESSOR CHART - *KOMPRESSOR KARTE*							
Modello *Modele* Model *Modell*	Tensione *Volts* Tension *Spannung*	Mod. Compressore *Type compresseur* Compressor model *Kompressor typ*	Compressore *Compresseur* Compressor *Kompressor*	Relé *Relais* Relay *Relais*	Protettore *Protecteur* Protector *Schutzgerat*	Capacità d'avv. *Capacité/demarrage* Start capacitor *Start kondensator*	
SD80	**115/60/1**	-	-	-	-	-	
SD80	**230/60/1**	**CAJ4461Y**	**670099 07**	**620057 48**	**620058 78**	**620167 01**	
SD80	**230/50/1**	**CAJ4461Y**	**670099 02**	**620057 44**	**620058 39**	**620167 01**	

SD80 - TABELLA COMPONENTI ELETTRICI - *TABLEAU COMPOSANTS ELECTRIQUE* **ELECTRIC COMPONENTS CHART - *ELEKTRISCHEKARTE***							
Modello *Modele* Model *Modell*	Tensione *Volts* Tension *Spannung*	Pompa *Pompe a eau* Water pump *Wasser pumpe*	Motore ventilatore *Moteur ventilateur* Fan motor only *Lufter motor*	Valv. ingr. acqua *V.e.m. arriveé eau* Water inlet valve *Wasserein. ventil*	Valvola gas caldo *V.E.M. gaz chauds* Hot gas valve *Heissgaz ventil*	Timer *Minuterie* Timer *Timer*	Contattore *Contacteur* Contactor *Schaltschutz*
SD80	**115/60/1**	-	-	-	-	-	-
SD80	**230/60/1**	**620415 01**	**620419 02**	**650105 52** (Air/Water)	**620306 48** - Coil **620306 27** - Body	**620441 00**	**630119 02**
SD80	**230/50/1**	**620415 00**	**620419 02**	**650105 52** (Air/Water)	**620306 48** - Coil **620306 27** - Body	**620441 00**	**630119 02**

SIMAG
ICE MACHINES

www.simag.it

SIMAG
via Risorgimento, 4
20017 Mazzo di Rho (MI) - Italy
Tel. +39 02 93900215 (Commerciale - Sales Dept.)
Tel. +39 02 93960357 (Assistenza - Service Dept.)
Fax +39 02 93900226 (Commerciale - Sales Dept.)
Fax +39 02 93960366 (Assistenza - Service Dept.)
e-mail: sales@simag.it
e-mail: service@simag.it

Singapore Office
SIMAG FAR EAST
627A Aljunied Road
04-04 Biztech Centre
Singapore 389842
Tel. ++65 6738 5393
Fax ++65 6738 1959
e-mail: scotsice@singnet.com.sg

Certified ISO 9001
TOTAL QUALITY