FAGOR

FAGOR INDUSTRIAL

DESPIECE TÉCNICO
TECHNICAL PARTS

Lavavajillas
Dishwasher

MODELOS
COP-174W / HRS

Febrero 2015 February
Revisado Noviembre 2017 November Revised



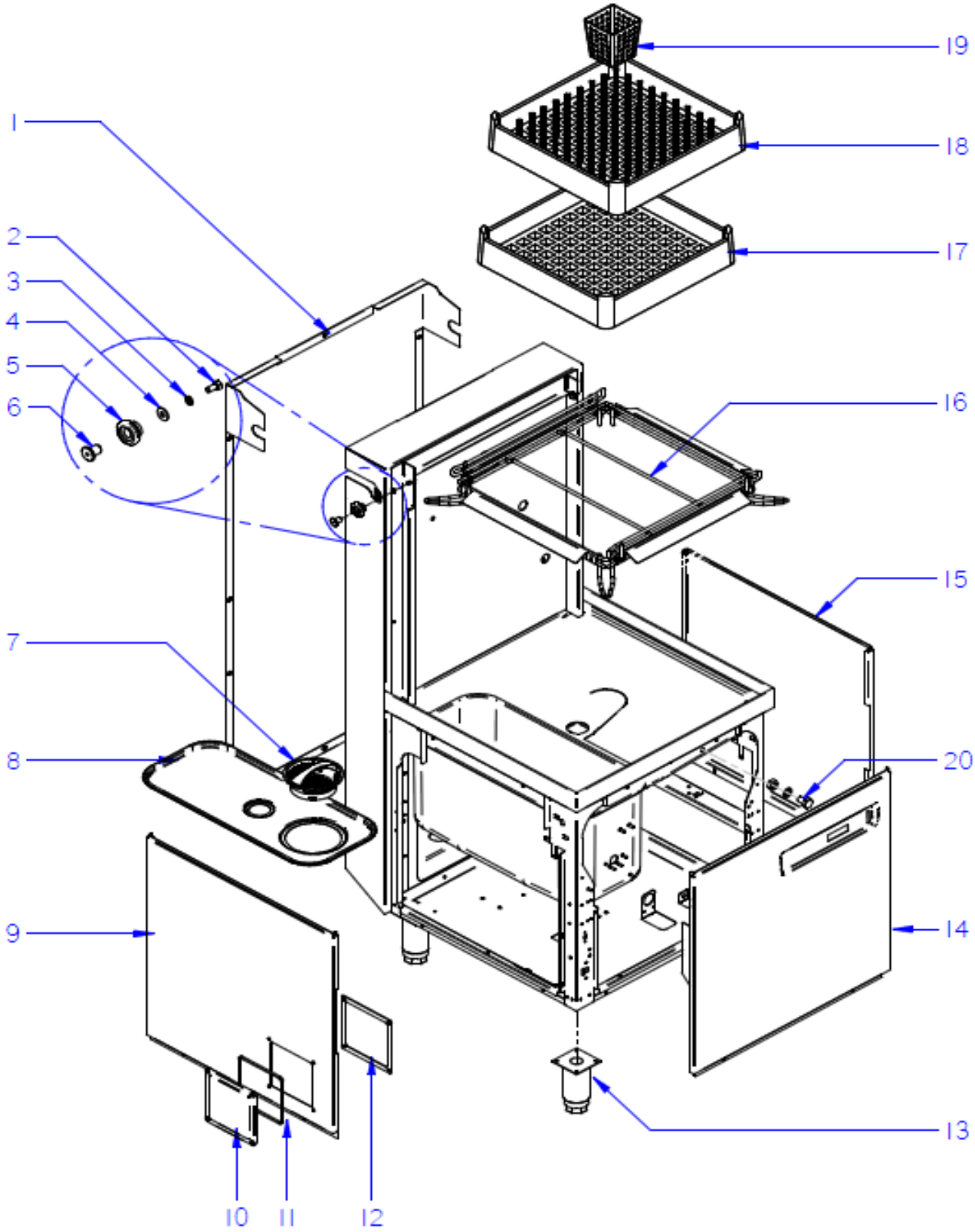

Drawing Nr.	Signature	Date	MUEBLE / FRAME	Sheet
C-3372	Iban R.	jul-15	COP-174W	1

FAGOR

ZONA / ZONE	ARMAZON / FRAME	LÁMINA / DRAWING	C-3372	FAGOR

ITEM	REFERENCIA REFERENCE	DENOMINACIÓN	DENOMINATION	COP-174W	COP-174W HRS						RECOMMENDED	ELIMINADO ELIMINATED	INTRODUCIDO INTRODUCED	NOTAS / NOTES
1	12110635	PANEL POSTERIOR CAPOTA	REAR PANEL	1	-									
1	12111483	PANEL POSTERIOR CAPOTA HRS	REAR PANEL HRS	-	1									
2	12010128	Tr c/hex INOX M8x16MM DIN933	M8x16MM DIN933 STAIN. HEX. SCREW	1	1									
3	12010272	Ar grower INOX 8mm DIN127	8mm DIN127 STAINLESS GROWER RET	2	2									
4	12059586	ARAN M8 INOX DIN9021	M8 DIN9021 STAINLESS RETAINER	2	2									
5	12047509	RODILLO ELEVACIÓN CAPÓ	HOOD ELEVATION ROLLER	2	2									
6	12047510	CASQUILLO RODILLO ELEVACIÓN	ELEVATION ROLLER BUSHING	2	2									
7	12048609	CESTILLO RECOGEDOR CONCEPT	CONCEPT DUSTPAN BASKET	1	1									
8	12047947	BANDEJA FILTRO CONCEPT	CONCEPT FILTER TRAY	1	1									
9	12120608	PANEL LATERAL DCHO.	RIGHT SIDE PANEL	1	1									
10	12095220	TAPA PLÁSTICO CAJA CONEXIONES	CONNECTION BOX PLASTIC COVER	1	1									
11	12096947	JUNTA TAPA	COVER SEAL	1	1									
12	12103501	JUNTA EPDM CAJA CONEXIONES	CONNECTION BOX EPDM SEAL	1	1									
13	12048723	PATA PLÁSTICO CAPOTA	HOOD PLASTIC LEG	4	4							08.05.15		
13	12009104	PATA REGULABLE	ADJUSTABLE LEG	4	4								08.05.15	
14	12119680	PANEL FRONTAL CONCEPT	CONCEPT FRONT PANEL	1	1									
15	12120609	PANEL LATERAL IZQDO.	LEFT SIDE PANEL	1	1									
16	12045909	BASE CESTILLO VARILLA COMPLETO	COMPLETE WIRE BASKET BASE	1	1									
17	12025011	CESTILLO BASE CT-10	CT-10 BASE BASKET	1	1									
18	12024990	CESTILLO PLATOS CP-16-18	CP-16-18 PLATES BASKET	1	1									
19	12023745	CESTILLO CUBIERTOS	CUTLERY BASKET	1	1									
20	12127398	CONJUNTO TAPÓN DD	DD CAP ASSEMBLY	1	1									

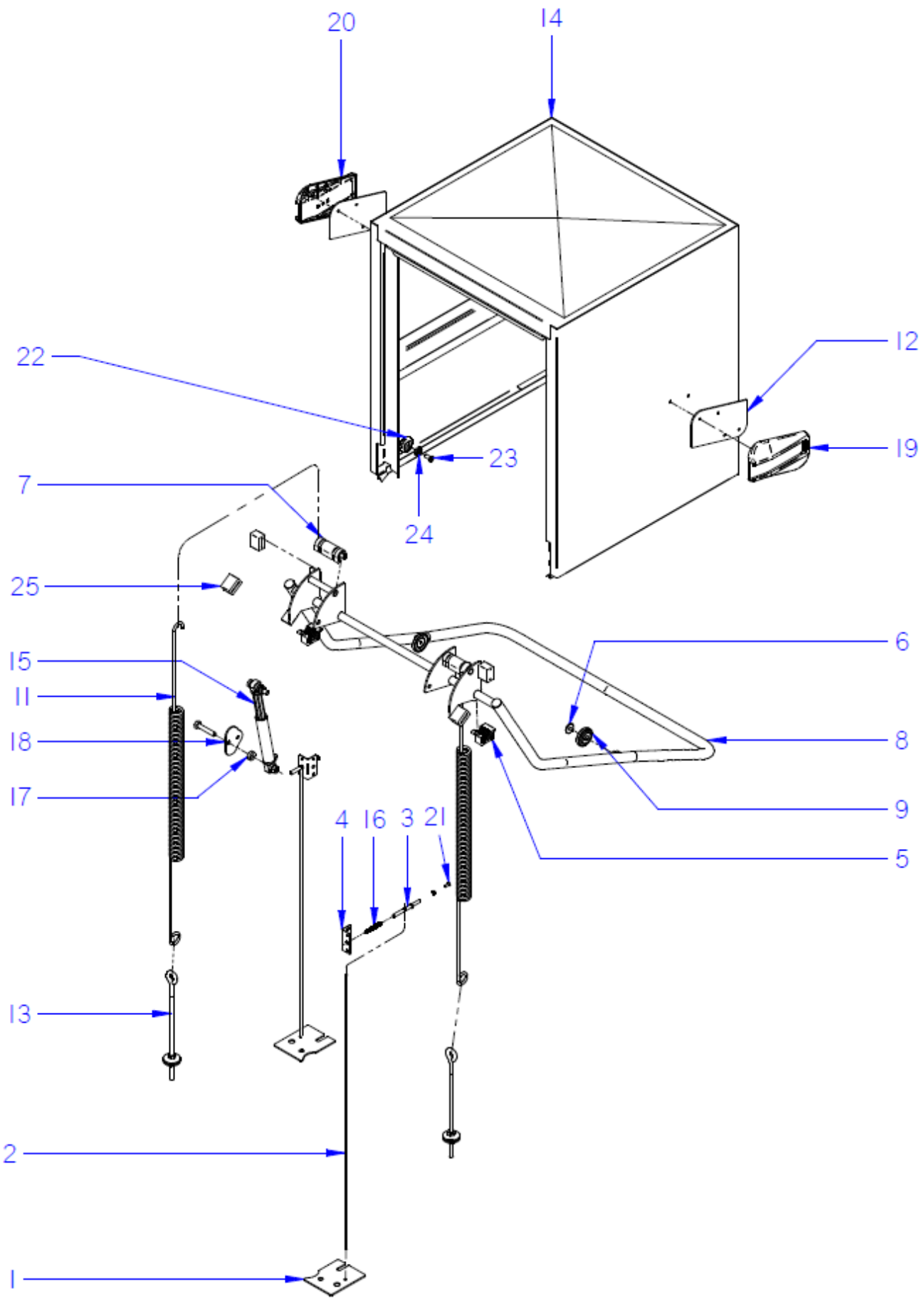

Drawing Nr.	Signature	Date	ASA-CAPOTA / HANDLE-HOOD	Sheet
C-3373	Iban R.	jul-15	LAVAVAJILLAS COP-174W DISHWASHER	3

FAGOR

ZONA / ZONE	ASA-CAPOTA / HANDLE-HOOD	LÁMINA / DRAWING	C-3373	FAGOR

ITEM	REFERENCIA REFERENCE	DENOMINACIÓN	DENOMINATION	COP-174W	COP-174W HRS						RECOMMENDED	ELIMINADO ELIMINATED	INTRODUCIDO INTRODUCED	NOTAS / NOTES
1	12096877	SOPORTE BLOQUEO SEGURIDAD	SECURITY LOCK SUPPORT	2	2							22/10/2015		
2	12096881	VARILLA BLOQUEO SEGURIDAD	SECURITY LOCK ROD	2	2							22/10/2015		
3	12096882	EJE BLOQUEO SEGURIDAD	SECURITY LOCK SHAFT	2	2							22/10/2015		
4	12096883	TAPA BLOQUEO SEGURIDAD	SECURITY LOCK COVER	2	2							22/10/2015		
5	12098128	SOPORTE DE GIRO EJE ASA	HANDLE AXIS ROD SUPPORT	2	2									
6	12047537	TOPE GOMA BIELA	CONNECTING ROD RUBBER BLOCK	4	4									
7	12096710	CASQUILLO APOYO MUELLE	SPRING SUPPORT BUSHING	2	2									
8	12098150	SISTEMA ELEVACION CAPOTA ADV.	HOOD ASCENT SYSTEM ADVANCE	1	1									
9	12098068	RODILLO ASA CAPOTA EVO	EVO HOOD HANDLE ROLLER	2	2									
10	12098073	TORNILLO RODILLO ASA EVO	HANDLE ROLLER SCREW	2	2									
11	12048836	MUELLE CAPOTA K7.5	HOOD SPRING K7.5	2	2									
12	12093162	JUNTA PLANA CARRIL	GUIDE'S PLANE SEAL	2	2									
13	12048915	GANCHO ROSCADO M10-L315	THREADED HOOK M10-L315	2	2									
14	12091140	CONJUNTO CAPO SIMPLE PARED	SIMPLE WALL HOOD ASSEMBLED	1	1									
15	12024980	AMORTIG. RD10FK 140N SUSPA	SHOCK ABSORVER RD10FK 140N	1	1									
16	12110409	MUELLE SIS. BLOQUEO CAPOTA	HOOD'S LOCK SYSTEM SPRING	2	2							22/10/2015		
17	12025255	CASQUILLO RODANTE	ROLLING BUSHING	1	1									
18	12098217	SOPORTE AMORTIGUADOR	SHOCK ABSORVER SUPPORT	1	1									
19	12091573	CARRIL IZDO CAPOTA	HOOD'S LEFT GUIDE	1	1									
20	12091933	CARRIL DCHO CAPOTA	HOOD'S RIGHT GUIDE	1	1									
21	12010242	TORNILLO ESPECIAL M-5X13	SPECIAL SCREW M-5X13	2	2							22/10/2015		
22	12047509	RODILLO ELEVACIÓN	RISING ROLLER	4	4									
23	12098022	TORNILLO RODILLO	ROLLER SCREW	2	2									
24	12098021	TOPE RODILLO	ROLLER BLOCK	2	2									

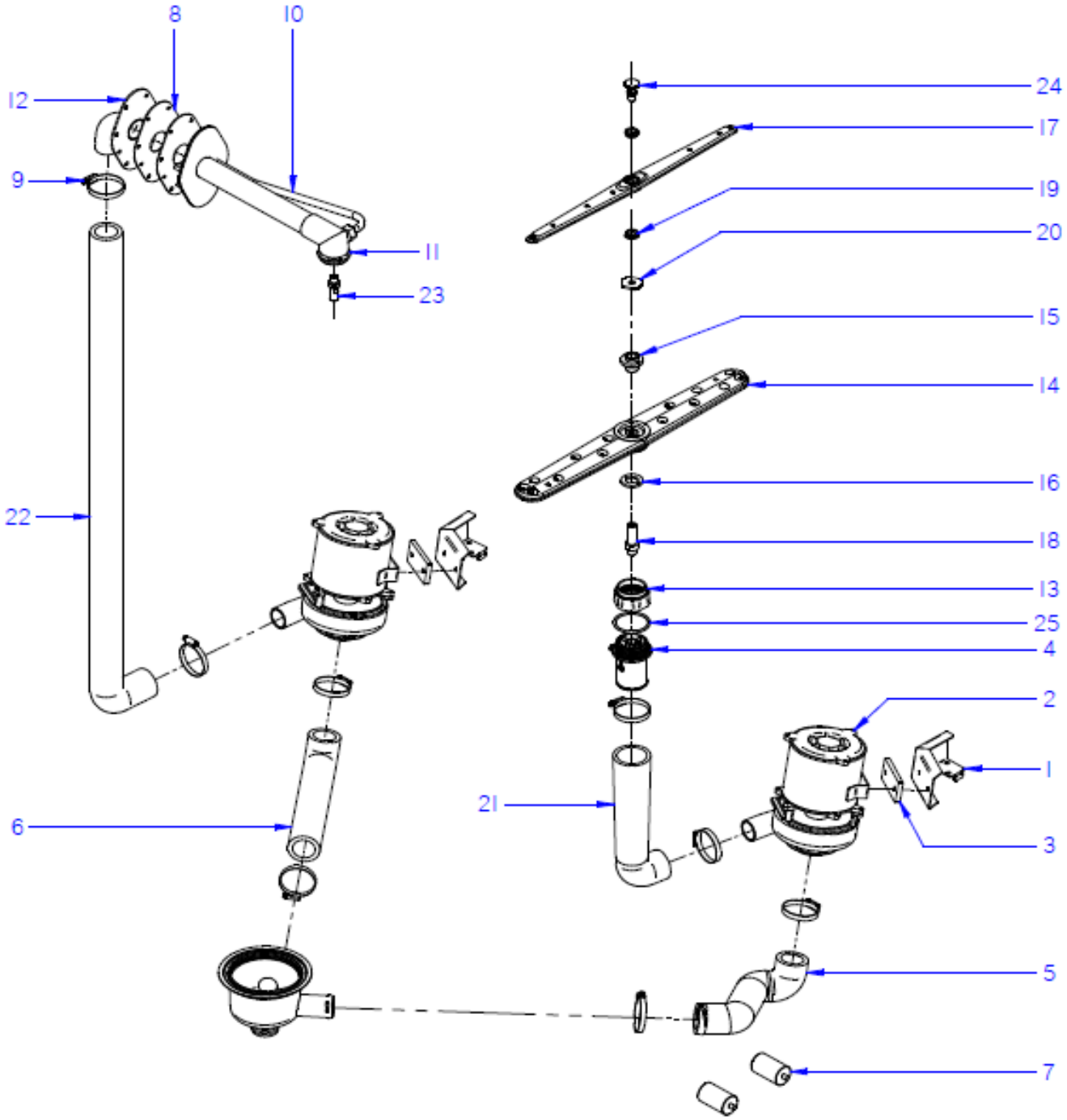

Drawing Nr.	Signature	Date	LAVADO 2 BOMBAS / WASHING 2 PUMPS	Sheet
C-3374	Iban R.	feb-15	LAVAVAJILLAS COP-174W DISHWASHER	5

FAGOR

ZONA / ZONE	PARTE FUNCIONAL LAVADO / WASHING FUNCTIONAL PART	LÁMINA / DRAWING	C-3374	FAGOR

ITEM	REFERENCIA REFERENCE	DENOMINACIÓN	DENOMINATION	COP-174W	COP-174W HRS						RECOMMENDED	ELIMINADO ELIMINATED	INTRODUCIDO INTRODUCED	NOTAS / NOTES
1	12046160	SOPORTE BOMBA LAVADO	WASHIG PUMP SUPPORT	2	2									
2	12102834	MOTOBOMBA 590KW 60Hz	WASHIG PUMP 590KW 60Hz	2	2						X			
3	12023556	BASE BOMBA LAVADO 1003016	WASHIG PUMP BASE 1003016	2	2									
4	12047910	SOP. DISTRIBUIDOR INFERIOR	LOWER SPRY-ARM SUPPORT	1	1									
5	12047688	CONDUCTO ASPIRACION 2 BOMB.	2 PUMP SUCTION PIPE	1	1									
6	12046162	CONDUCTO ASPIRACION	SUCTION PIPE	1	1									
7	12024376	CONDENSADOR 10MF	10MF CONDENSER	2	2						X			
8	12124505	JUNTA CIERRE BRAZO INOX	STAINLESS STEEL ARM SEAL	2	2									
9	12009962	ABRAZADERA 40-60	40-60 CLAMP	8	8									
10	12103247	BRAZO LAVAD-ACLAR. CAPOTA	WASH-RINSE ARM	1	1									
11	12024934	SOPORTE DISTRIBUIDOR RUPERIOR	UPPER SPRY-ARM SUPPORT	1	1									
12	12103243	BRIDA POSTERIOR BRAZO INOX	S.STEEL ARM BACK FLANGE	1	1									
13	12048171	ADAPTADOR RAMAS LAVADO 2 BOMB.	WASHING ARMS ADAPTER 2 PUMPS	1	1									
14	12003421	DISTRIBUIDOR COMPLETO	COMPLETE SPRY-ARM	2	2									
15	12025116	CASQUILLO DISTRIBUIDOR	SPRY-ARM'S BUSHING	2	2									
16	12023674	ARANDELA AMARRE	TIGHTEN UP WASHER	2	2									
17	12102984	DISTRIB. ACLARADO CONCEPT PLUS	CONCEPT PLUS RINSE SPRY-ARM	2	2									
18	12112480	EJE LAVADO CAPOTA CONCEPT	WASHING SHAFT	1	1									
19	12041628	PROTECTOR FUGAS ACLARADO	RINSING LEAKAGE PROGTECTOR	4	4									
20	12043288	TURECA ESPECIAL	SPECIAL NUT	2	2									
21	12047689	CODO IMPULSION COP110	COP110 EXPULSION ELBOW	1	1									
22	12047690	ARBOL LAVADO COP110 2 BOMBAS	COP110 2 PUMPS WASHING TREE	1	1									
23	12113860	EJE LAVADO ACLARADO CONCEPT W	RINSING SHAFT CONCEPT W	1	1									
24	12043422	EJE ACLARADO	RINSING SHAFT	2	2									
25	12049052	Junta 53,57x3,53	53,57x3,53 SEAL	1	1									

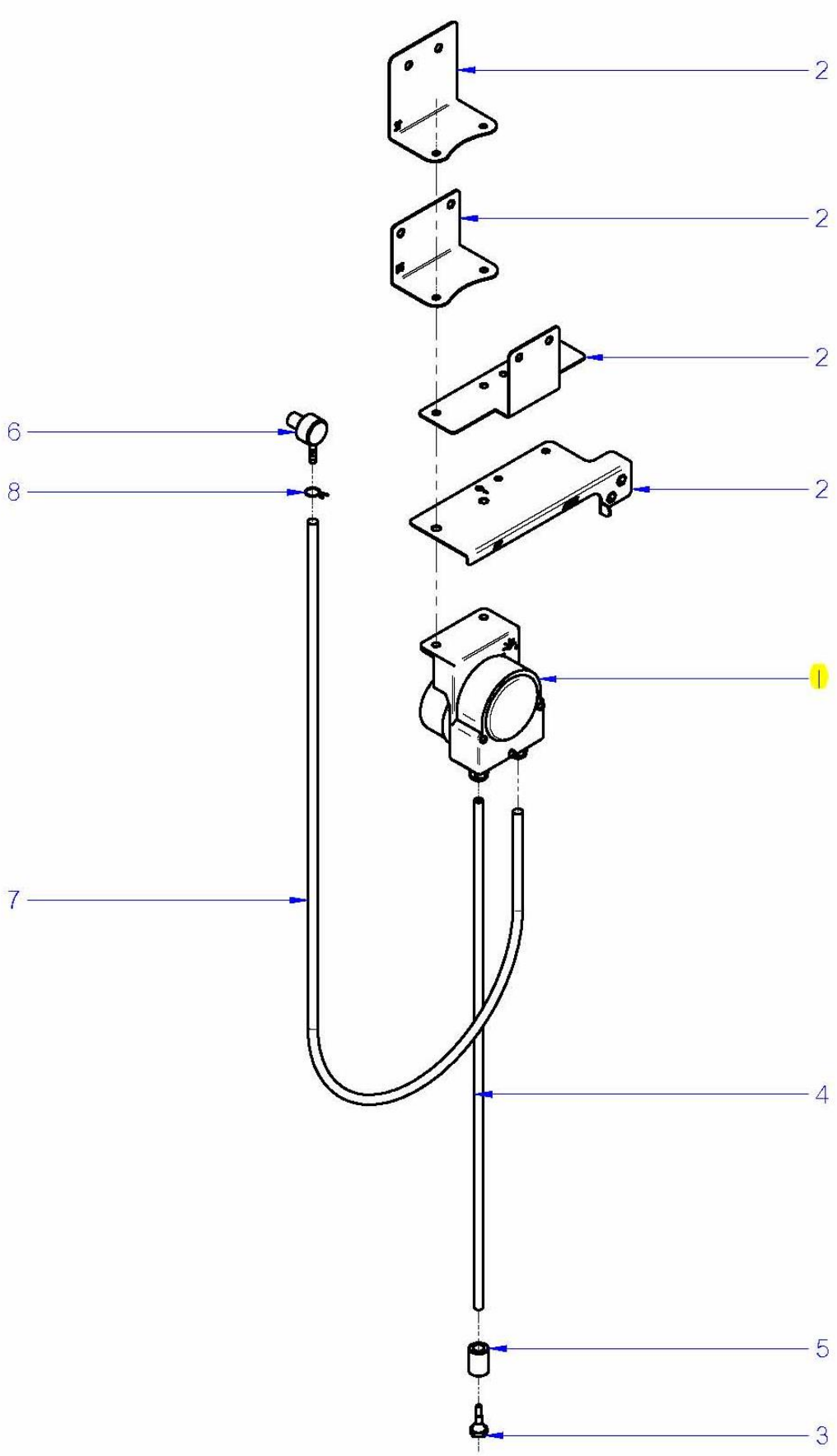

Drawing Nr.	Signature	Date	KIT DOSIF. DETERG. / DET. DISPENSER KIT	Sheet
C-3375	Iban R.	feb-15	LAVAVAJILLAS COP-174W DISHWASHER	7

FAGOR

ZONA / ZONE	KIT DOSIFICADOR DETERGENTE / DETERG. DISPENSER KIT	LÁMINA / DRAWING	C-3375	FAGOR

ITEM	REFERENCIA REFERENCE	DENOMINACIÓN	DENOMINATION	COP-174W	COP-174W HRS						RECOMMENDED	ELIMINADO ELIMINATED	INTRODUCIDO INTRODUCED	NOTAS / NOTES
	19022347	**KIT DOSIFICADOR DETERGENTE EVO**	**DETERGENT DISPENSER KIT EVO**											
1	12024216	DOSIF. DGTE REGULABLE G300	DETERG. REGUL. DISPENSER	1	1						X	01/03/2016		
1	12133011	DGTE REGULABLE SEKO	SEKO DETERG. REGUL.	1	1						X		01/03/2016	
2	12120598	SOP. DOSIFICADORES CAPOTA	DISPENSERS SUPPORT	1	1							01/03/2016		CAPOTA - PASS-THOUGH
2	12132202	SOP. DOSIFICADORES	DISPENSERS SUPPORT	1	1								01/03/2016	CAPOTA - PASS-THOUGH
2	12046465	SOPORTE BOMBA PERISTALTICA	PERISTALTIC PUMP SUPPORT	1	1									LAVAVASOS 400
2	12049139	SOPORTE DOS. DETERGENTE 12	DISPENSERS SUPPORT	1	1									LAVAVASOS 350
2	12102040	SOP. DOSIF. DETERGENTE AF	DISPENSERS SUPPORT FRONT LOAD.	1	1									AP.FRONTAL - FRONT LOADING
3	12011355	FILTRO ASPIRACION	SUCTION FILTER	1	1									
4	12024139	CONDUCTO ASPIRACIÓN AZKOY	AZKOY SUCTION PIPE	1	1									
5	12164632	PESO FILTRO	FILTER'S WEIGHT	1	1									
6	12024531	INYECTOR DETERGENTE INOX	DETERGENT INJECTOR	1	1									
7	11000079	CONDUCTO DOSIF. TRANSP 6X4	DISPENSER TRANSPARENT PIPE	1	1									
8	12023707	BRIDA ELASTICA TUBO	ELASTIC CLAMP FOR PIPES	1	1									
	12024314	CABLEADO DOSIF. DETERGENTE	DETERGENT DISPENSER WIRING	1	1									

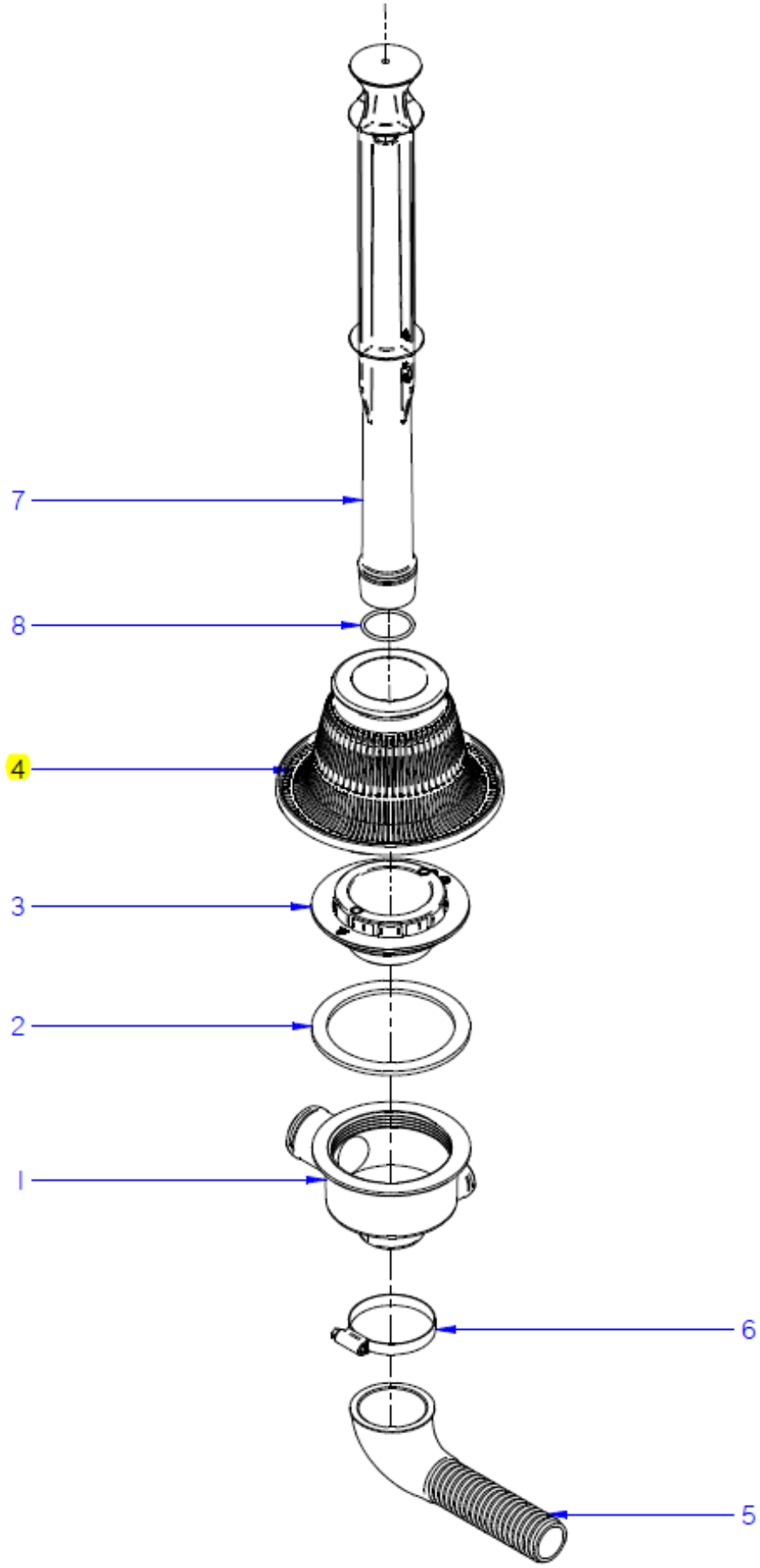

Drawing Nr.	Signature	Date	DESAGÜE / DRAIN	Sheet
C-3376	Iban R.	ene-15	LAVAVAJILLAS COP-174W DISHWASHER	9

FAGOR

ZONA / ZONE	DESAGÜE / DRAIN	LÁMINA / DRAWING	C-3376	FAGOR

ITEM	REFERENCIA REFERENCE	DENOMINACIÓN	DENOMINATION	COP-174W	COP-174W HRS						RECOMMENDED	ELIMINADO ELIMINATED	INTRODUCIDO INTRODUCED	NOTAS / NOTES
1	12048037	CUBETA 2 BOMBAS CAPOTA	PASS-THROUGH PAIL 2 PUMPS	1	1									
2	12048717	JUNTA TORICA O-126,35X5,33	O-RING O-126,35X5,33	1	1									
3	12048039	AMARRE CUBETA CAPOTA	PASS-THROUGH PAIL FASTENING	1	1									
4	12049652	FILTRO COMPLETO CONCEPT	COMPLETE FILTER CONCEPT	1	1									
5	12024473	MANGUERA DESAGÜE	DRAINING PIPE	1	1						X			
6	12009962	ABRAZADERA 40-60	40-60 CLAMP	1	1									
7	12048102	ALIVIADERO CONCEPT CAPOTA	PASSTHROUGH CONCEPT SPILLWAY	1	1									
8	12048748	JUNTA TORICA ALIVIADERO 37-32-2,5	SPILLWAY O-RING 37-32-2,5	1	1									

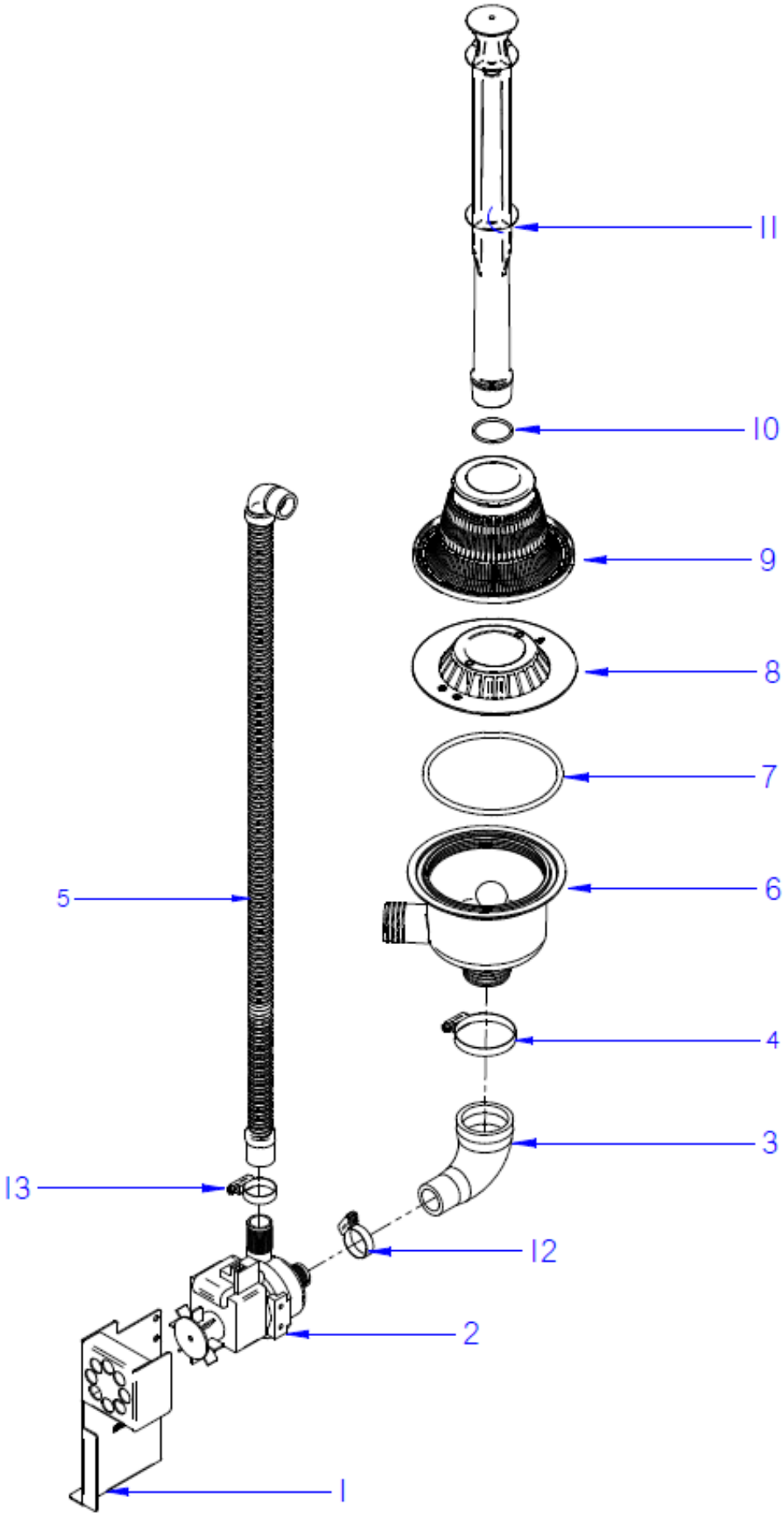

Drawing Nr.	Signature	Date	DESAGÜE / DRAIN	Sheet
C-3298	Iban R.	ene-15	LAVAVAJILLAS COP-174W DISHWASHER	11

FAGOR

ZONA / ZONE	KIT BOMBA DESAGÜE / DRAINING PUMP KIT	LÁMINA / DRAWING	C-3298	FAGOR

ITEM	REFERENCIA REFERENCE	DENOMINACIÓN	DENOMINATION	COP-174W	COP-174W HRS						RECOMMENDED	ELIMINADO ELIMINATED	INTRODUCIDO INTRODUCED	NOTAS / NOTES
	19022349	**KIT BOMBA DESAGÜE CONCEPT**	**CONCEPT DRAINING PUMP KIT**											
1	12096889	SOPORTE BOMBA CONCEPT	DRAINING PUMP'S SUPPORT	1	1									
2	12023456	BOMBA DESAGUE	DRAINING PUMP	1	1						X			
3	12049606	CODO BOMBA DESAGÜE	DRAINING PUMP'S ELBOW	1	1									
4	12009962	ABRAZADERA 40-60	40-60 CLAMP	1	1									
5	12023666	MANGUERA DESAGÜE	DRAINING PIPE	1	1						X			
6	12048037	CUBETA 2 BOMBAS CAPOTA	PASS-THROUGH PAIL 2 PUMPS	1	1									
7	12048717	JUNTA TORICA O-126,35X5,33	O-RING O-126,35X5,33	1	1									
8	12048039	AMARRE CUBETA CAPOTA	PASS-THROUGH PAIL FASTENING	1	1									
9	12049652	FILTRO COMPLETO CONCEPT	COMPLETE FILTER CONCEPT	1	1									
10	12048748	JUNTA TORICA ALIVIADERO 37-32-2,5	SPILLWAY O-RING 37-32-2,5	1	1									
11	12048102	ALIVIADERO CONCEPT CAPOTA	PASSTHROUGH CONCEPT SPILLWAY	1	1									
12	12009997	ABRAZADERA 25-40	25-40 CLAMP	1	1									
13	12010023	ABRAZADERA 20-32	20-32 CLAMP	1	1									

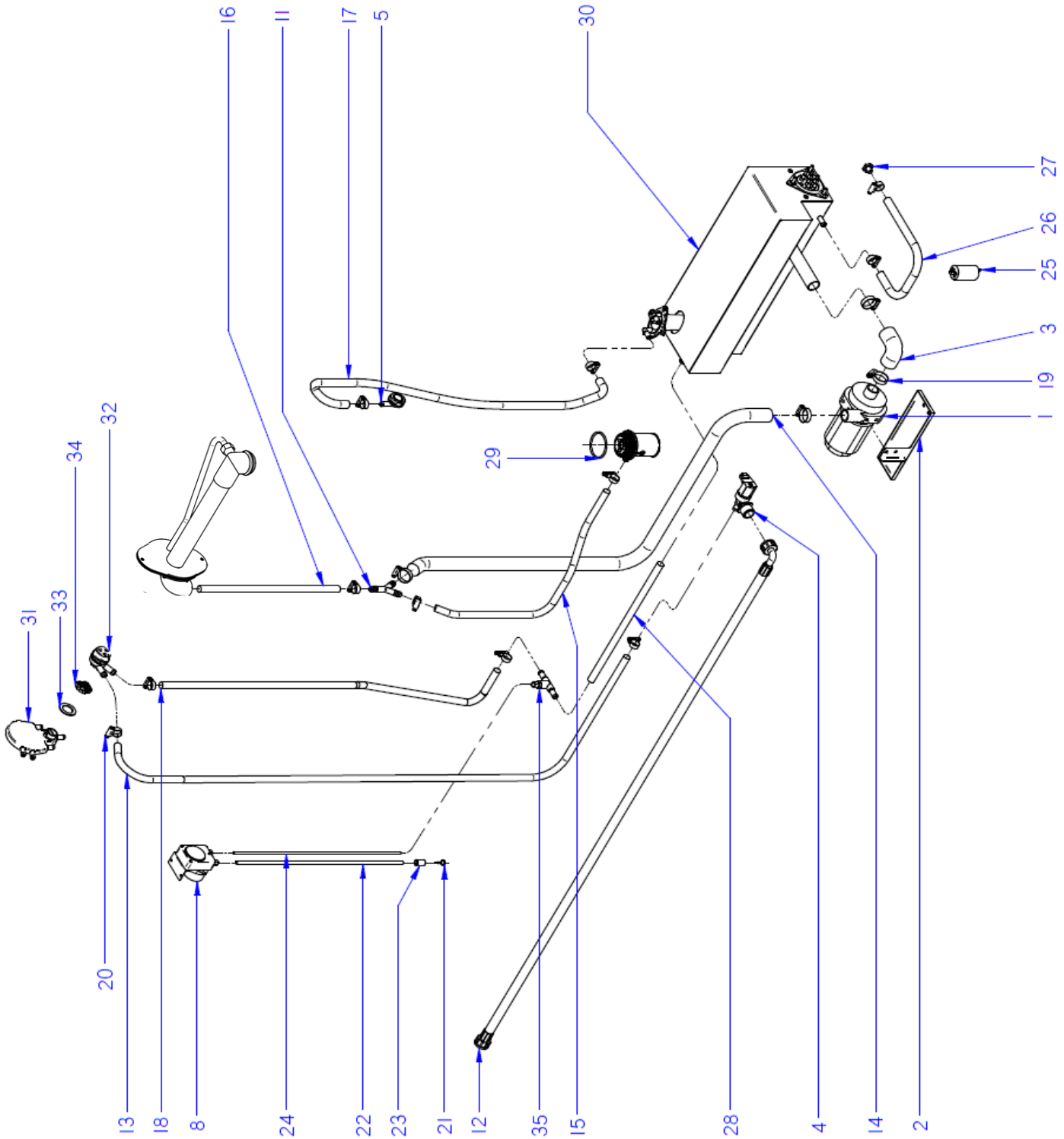

Drawing Nr.	Signature	Date	ACLARADO / RINSING	Sheet
C-3377	Iban R.	feb-15	LAVAVAJILLAS COP-174W DISHWASHER	13

FAGOR

ZONA / ZONE	PARTE FUNCIONAL ACLARADO / FUNCTIONAL RINSE PART	LÁMINA / DRAWING	C-3377	FAGOR

ITEM	REFERENCIA REFERENCE	DENOMINACIÓN	DENOMINATION	COP-174W	COP-174W HRS						RECOMMENDED	ELIMINADO ELIMINATED	INTRODUCIDO INTRODUCED	NOTAS / NOTES
1	12024233	BOMBA ACLARADO HANNING	HANNING RINSING PUMP	1	1						X			
2	12110537	SOPORTE BOMBA ACLARADO	RINSING PUMP'S SUPPORT	1	1									
3	12041928	CONDUCTO CALDERIN-BOMBA	BOILER-PUMP HOSE	1	1									
4	12095427	E.V SIMPLE 220V SALIDA A 90º	SIMPLE E.V 90º EXIT	1	1						X			
5	12097453	CONDUCTO AIREACION CALDERIN	BOILER VENTILATION ELBOW	1	1									
8	12133011	KIT DOSIFICADOR ABRILLANTADOR	KIT RINSE DISPENSER	1	1						X			
11	12023511	RACORD EN Y	"Y" SHAPED RACCORD	1	1									
12	12024115	MANGUERA ENTRADA AGUA	WATER SUPPLY HOSE	1	1									
13	12114353	TUBO WRAS	WRAS PIPE	1	1									
14	12046080	COND. IMPULSION ACLARADO	RINSING EXPULSION PIPE	1	1									
15	11000083	TUBO GOMA NEGRA D 17x10	D 17x10 BLACK RUBBER PIPE	1	1									
16	11000083	TUBO GOMA NEGRA D 17x10	D 17x10 BLACK RUBBER PIPE	1	1									
17	11000083	TUBO GOMA NEGRA D 17x10	D 17x10 BLACK RUBBER PIPE	1	1									
18	12114353	TUBO WRAS	WRAS PIPE	1	1									
19	12010023	ABRAZADERA 20-32	20-32 CLAMP	4	4									
20	12010036	ABRAZADERA 12-20	12-20 CLAMP	14	14									
21	12011355	FILTRO ASPIRACION	SUCTION FILTER	1	1									
22	12024139	CONDUCTO ASPIRACIÓN AZKOY	AZKOY SUCTION PIPE	1	1									
23	12024353	PESO FILTRO	FILTER WEIGHT	1	1									
24	11000079	CONDUCTO DOSIF. TRANSP 6X4	DISPENSER TRANSPARENT PIPE	1	1							08/03/2106		
24	12023600	TUBO EPDM TRENZADO 6x12	TWISTED EPDM HOSE 6x12	1	1								08/03/2106	
25	12023600	CONDENSADOR 5 µF	5 µf CONDENSER	1	1						X			
26	11000083	TUBO GOMA NEGRA D 17x10	BLACK RUBBER PIPE D 17x10	1	1									
27	12041528	TAPON M10x1.5	M10x1.5 CAP	1	1									
28	11000083	TUBO GOMA NEGRA D 17x10	BLACK RUBBER PIPE D 17x10	1	1									
29	12049052	JUNTA 53,57x3,53 SOP DISTR. INF.	53,57x3,53 O-RING	1	1									
30	12091690	CALDERIN RECTANGULAR	SQUARE BOILER	1	1									
31	12091121	AIR BREAK	AIR BREAK	1	1									
32	12024568	VALVULA ANTIRRETORNO	NON-RETURN VALVE	1	1						X			
33	12091122	JUNTA AIR BREAK	AIR BREAK'S SEAL	1	1									
34	12104339	TUERCA AIR BREAK	AIR BREAK'S NUT	1	1									
35	12040714	RACOR EN T ANTIRRETORNO	T FITTING NON-RETURN	1	1							08/03/2106		
35	12025288	TOMA PRESION	PRESSURE FITTING	1	1								08/03/2106	

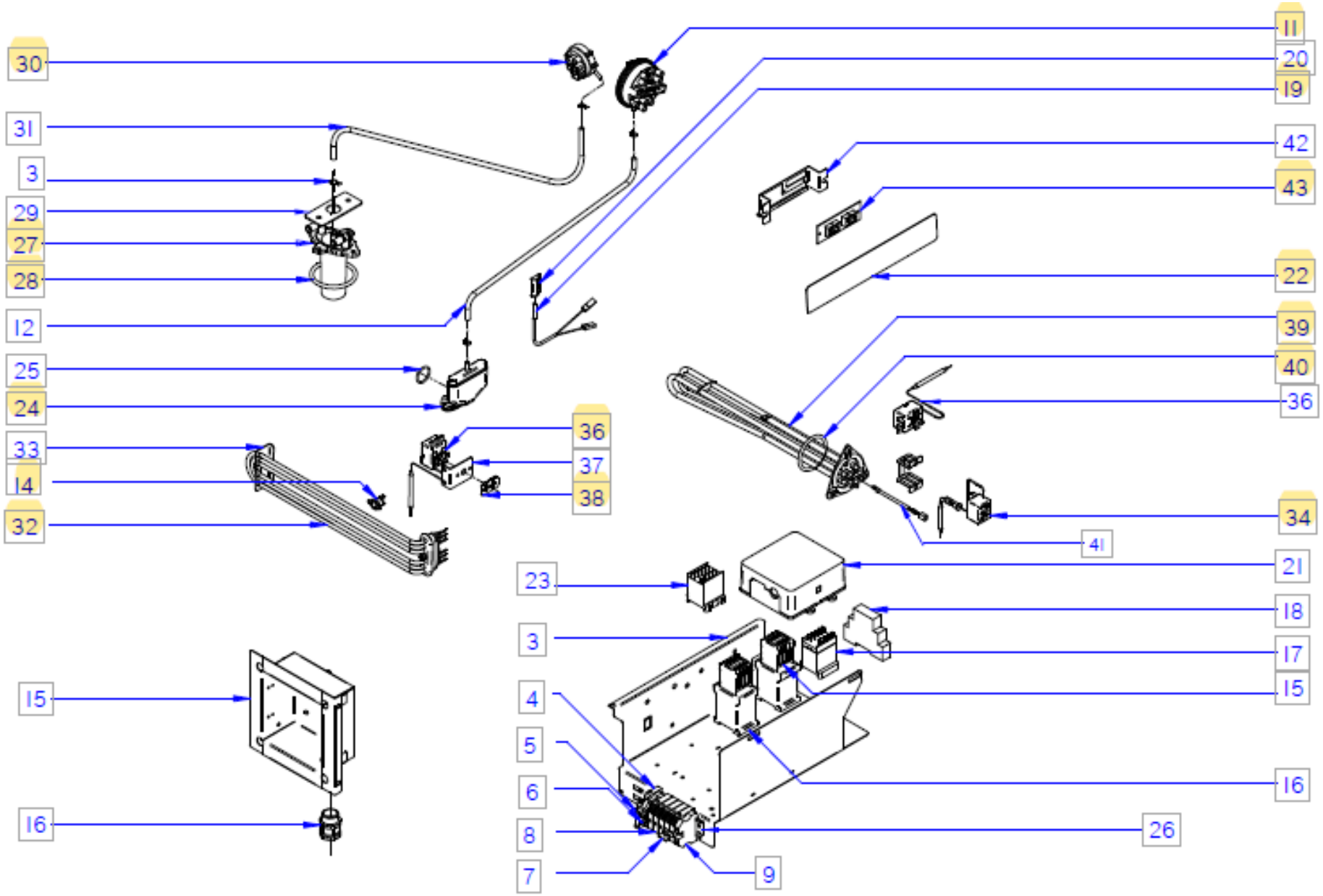

Drawing Nr.	Signature	Date	ELECTRICO / ELECTRIC	Sheet
C-3378	Iban R.	nov-15	COP-174W DISHWASHER	15

FAGOR

ZONA / ZONE	CONJUNTO ELECTRICO / ELECTRICAL PART	LÁMINA / DRAWING	C-3378	FAGOR

ITEM	REFERENCIA REFERENCE	DENOMINACIÓN	DENOMINATION	COP-174W	COP-174W HRS						RECOMMENDED	ELIMINADO ELIMINATED	INTRODUCIDO INTRODUCED	NOTAS / NOTES
1	12120601	BASE CAJA CONEXIONES	CONNECTIONS BOX BASE	1	1									
2	12009927	PRENSA ESTOPAS PG-21	PG-21 CABLE GLAND	1	1									
3	12047752	BASE CUADRO ELÉCTRICO	ELECTRIC BOARD CARD	1	1									
4	12024199	TOPE FINAL	FINAL END	1	1									
5	12025158	BORNAS PORTA FUSIBLES	FUSE HOLDER TERMINALS	1	1									
6	12025180	REGLETA BORNAJE 2 PISOS	2 LEVEL CONNECTION STRIP	1	1									
7	12103361	PUENTE BORNE 10mm2 2 VÍAS	10mm2 2 WAYS SPLICE BRIDGE	1	1									
8	12023373	BORNES 10 WDU-10203.O	10 WDU-10203.O TERMINAL	5	5									
9	12024743	BORNE TIER 10 WPE-10103.O	EARTH TERMINAL	1	1									
11	12123407	PRESOSTATO 0,01BAR SIMPLE UL	SIMPLE 0,01BAR PRESS. SWITCH UL	1	1						X			
12	11000066	TUBO GOMA NEGRO D 8x4	D 8x4 BLACK RUBBER PIPE	1	1									
13	12023707	BRIDA ELASTICA TUBO	ELASTIC CLAMP FOR PIPES	2	2									
14	12096597	TERM. SEG. 261B 110ºC FAST 90	SEC. THERM. 261B 110ºC FAST 90	1	1						X			
15	12111795	CONTACTOR 230V 50/60 Hz 20A	230V 50/60 Hz 20A CONTACTOR	1	1									
16	12130859	CONTACTOR AUXILIAR 250V 10 A UL	250V 10 A UL AUX. CONTACTOR	2	2									
17	12024011	CONTACTOR 230V 50/60 Hz	230V 50/60 Hz CONTACTOR	1	1									
18	12024079	RELE TEMP. 230V AC 50/60 Hz 8A	230V AC 50/60 Hz 8A TEMP RELAY	1	1									ONLY HRS
19	12024477	INTERRUPTOR MAGNETICO	MAGNETIC SWITCH	1	1						X			
20	12024066	AMARRE INTERRUP. MAGNETICO	MAGNETIC SWITCH'S SUPPORT	1	1									
21	12991036	TARJETA 5 RELES COMPLETA	5 RELAYS COMPLETE CARD	1	1									
22	12119176	EMBELLECEDOR COP-174	COP-174 STICKER	1	1						X	15/05/2017		
22	12159204	EMBELLECEDOR COP-174	COP-174 STICKER	1	1						X		15/05/2017	
23	12024012	CONTACTOR 3TF20 01-3AL2 230	3TF20 01-3AL2 230 CONTACTOR	1	1									
24	12093146	CAMPANA TANQUE	TUB'S PRESSURE CHAMBER	1	1						X			
25	12093145	JUNTA TORICA CAMPANA	PRESSURE CHAMBER'S O-RING	1	1									
26	12022303	GUIA CONTACTOR L-120	L-120 CONTACTOR GUIDE	1	1									
27	12091478	CAMPANA CALDERIN	BOILER'S PRESSURE CHAMBER	1	1						X			
28	12118822	JUNTA CAMPANA CALDERIN	BOILER'S P.CHAMBERS SEAL	1	1						X			
29	12101852	CHAPA REFUERZA CAMPANA	P. CHAMBER STRENGTHENER	1	1									
30	12048644	PRESOSTATO SIMPLE 1,40-6,30mbar	1,40/6,30mbar SIMPLE PRES.SWITCH	1	1						X			
31	11000066	TUBO GOMA NEGRO D 8x4	D 8x4 BLACK RUBBER PIPE	1	1									

ZONA / ZONE	CONJUNTO ELECTRICO / ELECTRICAL PART	LÁMINA / DRAWING	C-3378	FAGOR

ITEM	REFERENCIA REFERENCE	DENOMINACIÓN	DENOMINATION	COP-174W	COP-174W HRS						RECOMMENDED	ELIMINADO ELIMINATED	INTRODUCIDO INTRODUCED	NOTAS / NOTES
32	12045886	RESISTENCIA 4,5KW TRIPLE	TRIPLE RESISTOR 4,5KW	1	1						X			
33	12049715	SOPORTE RESISTENCIA TANQUE	TUB RESOSTOR SUPPORT	1	1									
34	12023830	LIMITADOR TECASA 125ºC	TECASA THERMOSTAT 125ºC	1	1						X			
35	12022151	AMARRE LIMITADOR TECASA	TECASA THERMOST. SUPPORT	1	1									
36	12046152	TERMOSTATO CALDERIN 85º TECASA	THERMOSTAT 85°C TECASA	1	1									
37	12102004	SOPORTE TERMOSTATO	THERMOSTAT SUPPORT	1	1									
38	12044848	REGULADOR A 60ºC Tt DE 85ºC	60ºC Tt DE 85ºC REGULATOR	1	1									
39	12092825	RESIST. 12KW 400MM TRIPLE UL	12kW 400MM TRIPLE RESISTOR	1	1						X			
40	12118319	JUNTA TÓRICA RESIS. CALDERIN	BOILER RESISTOR'S O-RING	1	1						X			
41	12025036	CONJUNTO SONDA 64kOHM NTC	64kOHM NTC THERMOSTAT	2	2									
42	12022219	SOPORTE COMPO. AD AF-LVS	COMPONENTS SUPPORT AD AF-LVS	1	1									
43	12024028	VISUALIZADOR 12V DC 4DIG. 7SEG.	12V DC 4DIG. 7SEG. DISPLAY	1	1						X			

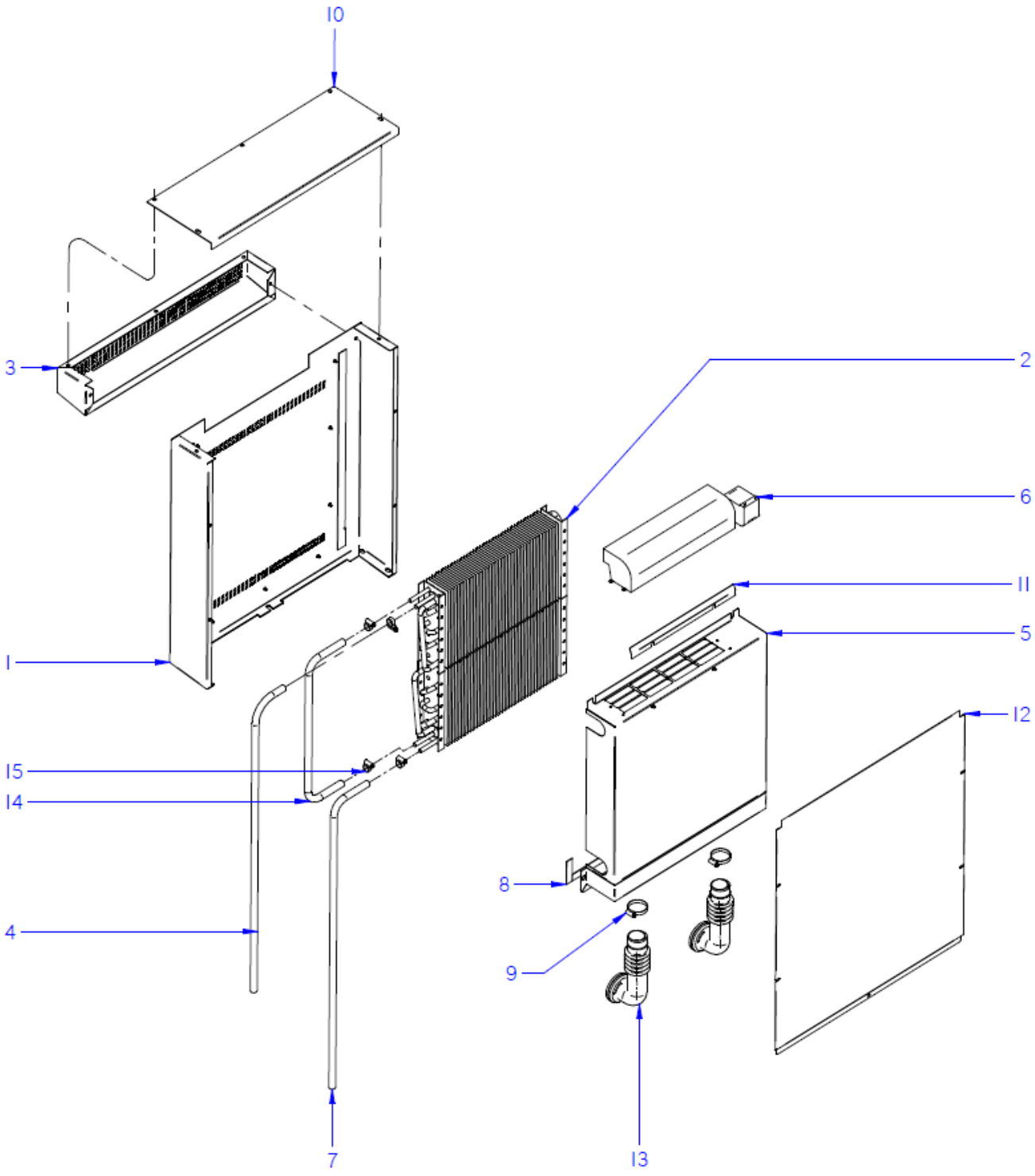

Drawing Nr.	Signature	Date	HEAT RECOVERY SYSTEM	Sheet
C-3379	Iban R.	feb-15	LAVAVAJILLAS COP-174W DISHWASHER	18

FAGOR

ZONA / ZONE	SISTEMA DE RECUPERACIÓN DE CALOR / HEAT RECOVERYING SYSTEM	LÁMINA / DRAWING	C-3379	FAGOR

ITEM	REFERENCIA REFERENCE	DENOMINACIÓN	DENOMINATION	COP-174W HRS							RECOMMENDED	ELIMINADO ELIMINATED	INTRODUCIDO INTRODUCED	NOTAS / NOTES
	12048348	**SIST. DE REC. DE CALOR COMPL.**	**HEAT RECOVERY SYSTEM**											
1	12120603	CUBIERTA EXTERIOR COMP. C.U.	C.U. EXTERNAL COVER	1										
2	12048309	SERPENTIN C.U.	C.U. COOLING COIL	2							X			
3	12120604	BISERA REJILLA C.U.	C.U. GRILLED CAP	1										
4	11000083	CONDUCTO HRS - AIRBREAK	HRS - AIRBREAK PIPE	1										
5	12048319	CUBIERTA INTERIOR COMPL. C.U.	C.U. INNER COVER COPLETE	1										
6	12048323	VENTILADOR TANGENCIAL C.U.	C.U. TANGENTIAL FAN	1										
7	11000083	CODUCTO EV - HRS	EV - HRS PIPE	1										
8	12111218	JUNTA LAVAVAJILLAS HRS	HRS DISHWASHER GASKET	1										
9	12009986	ABRAZADERA DIN 3017 W2 32-50L	DIN 3017 W2 32-50L CLAMP	2										
10	12048344	TAPA SUPERIOR C.U.	C.U. TOP COVER	1										
11	12048343	CHAPA DE AIRE C.U.	C.U. AIR SHEET	1										
12	12120605	TAPA POSTERIOR C.U.	C.U. BACK COVER	1										
13	12111213	CODO ENTRADA VAPOR HRS	HRS STEAM INLET ELBOW	2										
14	11000083	TUBO UNIÓN SERPENTINES	COOLING COILS CONNECTION PIPE	1										
15	12010036	ABRAZADERA 12-20	12-20 CLAMP	4										

ZONA / ZONE	VARIOS / VARIOUS	LÁMINA / DRAWING		FAGOR

ITEM	REFERENCIA REFERENCE	DENOMINACIÓN	DENOMINATION	COP-174W	COP-174W HRS						RECOMMENDED	ELIMINADO ELIMINATED	INTRODUCIDO INTRODUCED	NOTAS / NOTES
	12009946	CABLEADO TENSOR	TENSIONER WIRING	2	2									
	12114419	CABL. PORTAMAN. CO 21, 64, 120, W	C.PANEL CO 21, 64, 120, W WIRING	1	1									
	12120045	INSTALACIÓN ELÉCTR CO 120 W UL	CO 120 W UL ELECTRICAL WIRING	1	1									
	12119239	CABLEADO HRS	HRS WIRING	-	1									

ZONA / ZONE	RECOMENDADOS / RECOMMENDED		LÁMINA / DRAWING		FAGOR

ITEM	REFERENCIA REFERENCE	DENOMINACIÓN	DENOMINATION	COP-174W	COP-174W HRS							ELIMINADO ELIMINATED	INTRODUCIDO INTRODUCED	NOTAS / NOTES
2	12102834	MOTOBOMBA 590KW 60Hz	WASHIG PUMP 590KW 60Hz	2	2									C-3374
7	12024376	CONDENSADOR 10MF	10MF CONDENSER	2	2									C-3374
1	12024216	DOSIF. DGTE REGULABLE G300	DETERG. REGUL. DISPENSER	1	1							01/03/2016		C-3375
1	12133011	DGTE REGULABLE SEKO	SEKO DETERG. REGUL.	1	1								01/03/2016	C-3375
5	12115471	MANGUERA DESAGÜE	DRAINING PIPE	1	1									C-3376
1	12024233	BOMBA ACLARADO HANNING	HANNING RINSING PUMP	1	1									C-3377
4	12095427	E.V SIMPLE 220V SALIDA A 90º	SIMPLE E.V 90º EXIT	1	1									C-3377
8	12136886	KIT DOSIFICADOR ABRILLANTADOR	KIT RINSE DISPENSER	1	1									C-3377
25	12023600	CONDENSADOR 5 µF	5 µf CONDENSER	1	1									C-3377
32	12024568	VALVULA ANTIRRETORNO	NON-RETURN VALVE	1	1									C-3377
11	12123407	PRESOSTATO 0,01BAR SIMPLE UL	SIMPLE 0,01BAR PRESS. SWITCH UL	1	1									C-3378
14	12096597	TERM. SEG. 261B 110ºC FAST 90	SEC. THERM. 261B 110ºC FAST 90	1	1									C-3378
19	12024477	INTERRUPTOR MAGNETICO	MAGNETIC SWITCH	1	1									C-3378
22	12119176	EMBELLECEDOR COP-174	COP-174 STICKER	1	1							15/05/2017		C-3378
22	12159204	EMBELLECEDOR COP-174	COP-174 STICKER	1	1								15/05/2017	C-3378
24	12093146	CAMPANA TANQUE	TUB'S PRESSURE CHAMBER	1	1									C-3378
27	12091478	CAMPANA CALDERIN	BOILER'S PRESSURE CHAMBER	1	1									C-3378
28	12118822	JUNTA CAMPANA CALDERIN	BOILER'S P.CHAMBERS SEAL	1	1									C-3378
30	12048644	PRESOSTATO SIMPLE 1,40-6,30mbar	1,40/6,30mbar SIMPLE PRES.SWITCH	1	1									C-3378
31	12091121	AIR BREAK	AIR BREAK	1	1							13/11/2015		C-3378
32	12045886	RESISTENCIA 4,5KW TRIPLE	TRIPLE RESISTOR 4,5KW	1	1									C-3378
34	12023830	LIMITADOR TECASA 125ºC	TECASA THERMOSTAT 125ºC	1	1									C-3378
36	12130561	KIT TERMOSTATO TECASA 85 + REG.	KIT THERMOSTAT TECASA 85 + REG.	1	1									C-3378
39	12092825	RESIST. 12KW 400MM TRIPLE UL	12kW 400MM TRIPLE RESISTOR	1	1									C-3378
40	12118319	JUNTA TÓRICA RESIS. CALDERIN	BOILER RESISTOR'S O-RING	1	1									C-3378
43	12024028	VISUALIZADOR 12V DC 4DIG. 7SEG.	12V DC 4DIG. 7SEG. DISPLAY	1	1									C-3379
2	12048309	SERPENTIN C.U.	C.U. COOLING COIL	_	2									

①	12120045
②	12115668
② W	12114419
④ HRS	12119239
Prensa estopas	12009927
Esquema teorico	12103187
Indicador de componentes	12111079
Leyenda	12103338

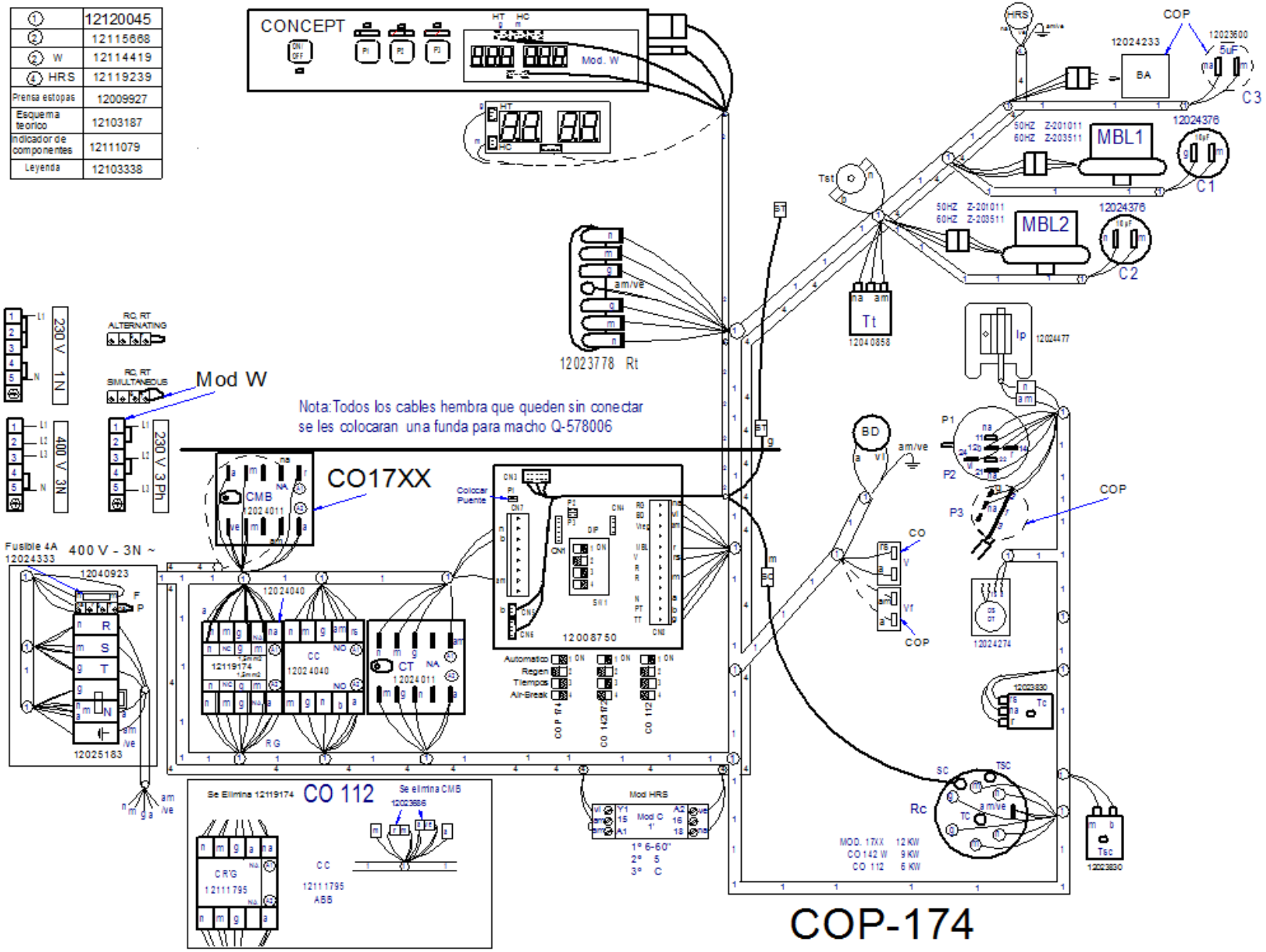

Drawing Nr.	Signature	Date	MONTAJE / ASSEMBLY	Sheet
12114495	Iban R.	nov-15	COP-174	22

FAGOR

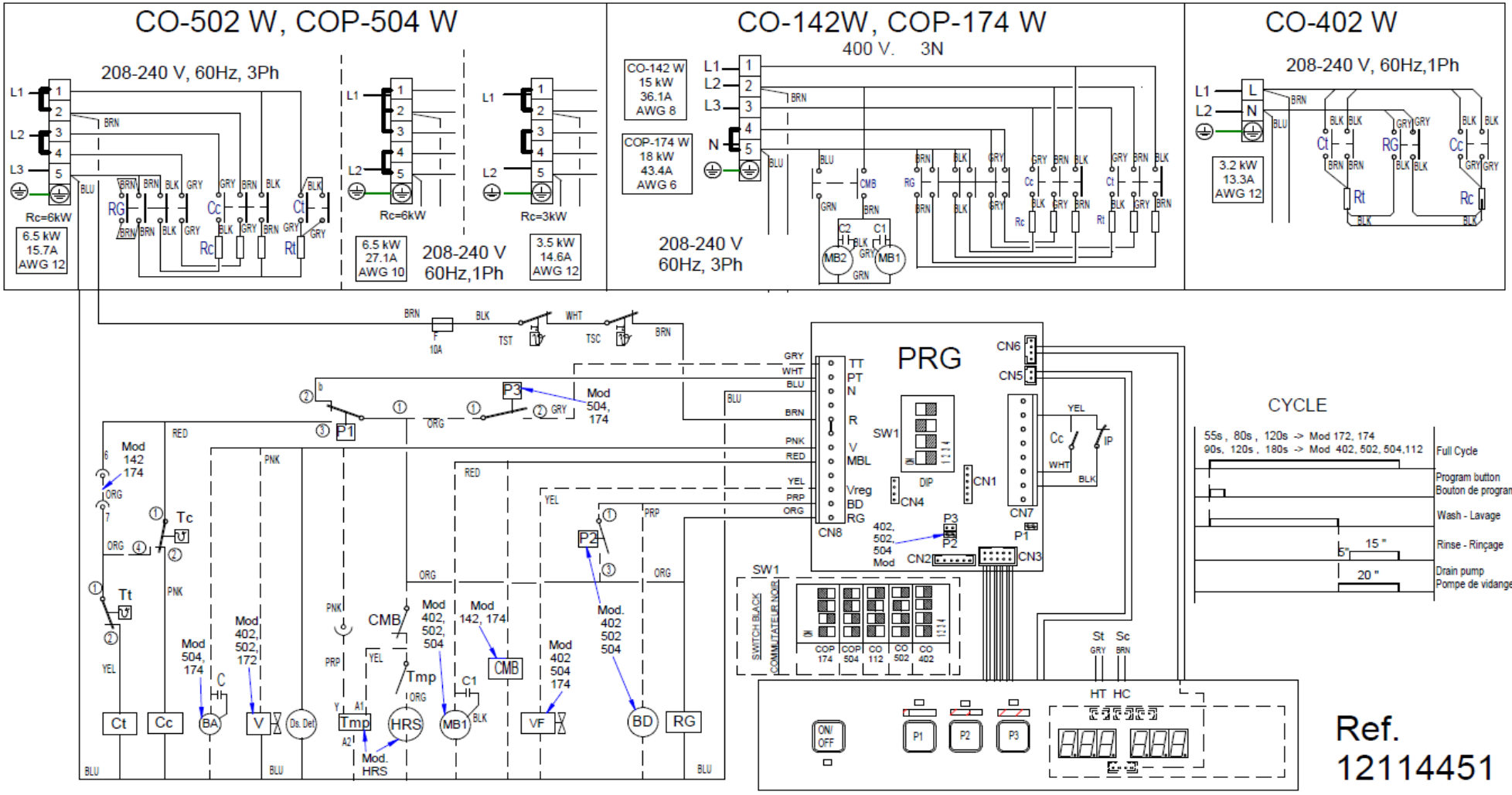

-	Esquema Teorico CO XX2 W, COP XX4 W	-	12114451		
N°	TITLE	QTY	CODE	MATERIAL	TREATMENT
GENERAL TOLERANCES:	ISO 2768-1	Very Coarse	FAGOR INDUSTRIAL	SHEET FORMAT:	A3
				DESING CENTER:	ONA
				MAT STATUS:	
				DOC STATUS:	
	LAVAVAJILLAS		DESIGNED BY: M.Mallo	VALIDATED BY: A.gallastegui	DATE: 11.06.2014
				SHEET:	1 / 1
GENERAL TOLERANCE FOR FORM AND POSITION:	ISO 2768-2			SCALE:	1:1
12114451	REVISION		PROPOSED BY: -	ISSUE DATE:	

LEYENDA APERTURA FRONTAL Y CAPOTA

	ESPANOL	ENGLISH	FRANÇAIS	DEUTSCH	ITALIANO	中文
Ⓐ Ⓑ	Puntos de conexion con R	Conecction point with R	Points de conexion R	Anschlußpunkte mit R	Punti di collegamento con R	带R接触点
BA	Bomba Aclarado	Rinse pump				
BD	Bomba desagüe	Drain pump	Pompe de vidange	Abflußpumpe	Pompa scarico	排水泵
C1, C2, C3	Condensador	Condenser	Condensateur	Kondensator	Condensatore	电容
CMB	Contactor bomba lavado	Wash pump contactor	Contacteur pompe lavage	Türrelais	Contattore pompa lavaggio	清洗泵接触器
Cc	Contactor calentamiento calderin	Boiler heating contactor	Contacteur chauf. surchauffeur	Kontaktschütz Waschpumpe	Contattore riscaldamento boiler	升温箱加热接触器
Ct	Contactor calentamiento tanque	Tank heating contactor	Contacteur chaufage cuve	Kontaktschütz Boilerheizung	Contattore riscaldamento serbatoio	水箱加热接触器
CP	Rele puerta	Door relay	Relais porte	Kontaktschütz Heizung Tank	Rele porta	门继电器
Ds.	Dosificador	Detergent doser	Dosseur	Dosierer Spülmittel	Dosatore detersivo	清洗剂药液泵
E.B	Electrobomba de presion	Electric pressure pump	Electropompe de pression	Elektro-Drucksteigungspumpe	Electropompa pressione	电子压力泵
IG	Interruptor general	Main switch	Interrupteur general	Hauptschalter	Interruttore generale	主开关
IP	Micro puerta	Door microswitch	Micro porte	Mikroschalter Tür	Micro porta	门磁开关
H1	Piloto de encendido	Operation light	Voyant funcionement	Betriebsanzeigelampe	Spia accensione	运行指示灯
H2	Piloto marcha	Start light	Voyant demarrage	Startanzeigelampe	Spia avvio	开始指示灯
H3	Piloto maquina preparada	Light machine ready	Voyant machine prêt	Betriebsbereitschaftsanzeigelampe	Pilota macchina preparata	加热完成 指示灯
HSal	Piloto falta de Sal	Light Lack of Salt				
MB1, MB2	Bomba lavado	Wash pump	Pompe lavage	Waschpumpe	Pompa lavaggio	清洗泵
M	Motor programador	Motor programmer	Moteur du programmateur	Motor Programmiervorrichtung	Motore programmatore	程序电机
M Av. R	Motor program. avance rapido	Motor program. rapid advance	Moteur du progr.avance rapide	Motor Programmiervorrich. Betrieb	Motore programmatore avanzamento rapido	程序电机 高速高级
M1	Micro programador marcha	Micro programmer on	Micro du programm. de marche	Motor Programmiervorrich. Waschen	Micro programma. di funzionamento	微程序 开
M2	Micro programador lavado	Micro programmer wash	Micro du programm. de lavage	Motor Programmiervorrich. Spülen	Micro programmatore di lavaggio	微程序 清洗
M3	Micro programador aclarado	Micro programmer rinse	Micro du programm. de rinçage	Motor Programmiervorrich. Vorlauf	Micro programmatore di risciacquo	微程序 喷淋
M4, M5	Micro programador avance	Micro programmer advance	Micro du programm. avance	Motor Programmiervorrich. schneller Vorlauf	Micro programmatore avanzamento	微程序 高级
P1, P3	Presostato	Pressure switch	Pressostat	Druckwächter	Pressostato	压力开关
P2	Presostato limitador	Hi-limit pressure switch	Pressostat de securité	Begrenzer Druckwächter	Pressostato limitatore	高水位 限制 压力开关
R	Rele de Generador de A.C.	Generator relay	Relais du Generateur	Relais Generator	Rele Generatore	热水供应器继电器
RG	Rele General	Main Relay		Stromversorgungsanschluß Gener.		
Ⓛ1 Ⓛ2 Ⓛ3 Ⓝ	Alimentac. Generador A.C.	Water heater feeding	Alimentation generateur		Alimentazione generatore	热水供应器电源线
RC	Resistencia calderin	Boiler heating element	Resistance surchauffeur	Heizwiderstand Boiler	Resistenza boiler	升温箱加热管
RT	Resistencia tanque	Tank heater	Resistance cuve	Heizwiderstand Tank	Resistenza serbatoio	水箱加热管
Tt	Termostato tanque	Tank thermostat	Thermostat de cuve	Thermostat Tank	Termostato serbatoio	水箱温控器
TC	Termostato calderin	Boiler thermostat	Thermostat surchauffeur	Thermostat kessel	Termostato boiler	升温箱温控器
Tst	Limitador tanque	Tank limiter	Limitateur de cuve	Begrenzer Tank	Limitatore serbatoio	水箱安全温控器
TSC	Limitador calderin	Boiler Hi-limit	Limiteur surchauffeur	Begrenzer Boiler	Limitatore boiler	升温箱安全温控器
TSTP	Termostato termo-stop	Termo-stop Thermostat	Thermostat Termo-stop	Thermostat Termo-stop	Termostato Termo-stop	温度停止温控器
V	Electrovalvula llenado y aclarado	Fill and rinse valve	Electrovan. remplissage rinçage	Elektroventil Füllen und Spülen	Elettroval. riempimento e risciacquo	电磁阀
Vf	Electrovalvula Aclarado Frio	Cold Water rinse valve				
VR1, VR2, VR3, BR	Electrovalvula Descalcificacion	Soft Water valve				
VE,	Ventilador cuadro electrico	Switchboard fan	Ventilateur tableau electrique	Schalttafelventilator	Ventilatore quadro elettrico	风机
HRS	Sistema recuperacion energia	Heat Recovery System				
COLOR	COLORES	COLOUR	COULEURS	FARBEN	COLORE	颜色
a = BLU =	Azul	Blue	Bleu	Blau	Blu	蓝
am = YEL =	Amarillo	Yellow	Jaune	Gelb	Giallo	黄
am/ve = YEL/GRN	Amarillo/verde	Yellow / green	Jaune / vert	Gelb/grün	Giallo/verde	黄/绿
b = WHT =	Blanco	White	Blanc	Weiß	Bianco	白
g = GRY =	Gris	Grey	Gris	Grau	Grigio	灰
m = BRN =	Marrón	Brown	Marron	Braun	Marrone	棕
n = BLK =	Negro	Black	Noir	Schwarz	Nero	黑
na = ORG =	Naranja	Orange	Orange	Orange	Arancio	橙
r = RED =	Rojo	Red	Rouge	Rot	Rosso	红
rs = PNK =	Rosa	Pink	Rose	Rosa	Roseo	粉
ve = GRN =	Verde	Green	Vert	Grün	Verde	绿
vi = PRP =	Violeta	Purple	Violet	Violett	Viola	紫

12103338