F A G O R

SPARE PARTS CATALOGUE
ERSATZTEILKATALOG
CATALOGUE PIECES DETACHEES
CATALOGO PARTI RICAMBIO
CATALOGO DE PIEZAS DE RECAMBIO
CATALOGO PECAS DE REPOSICAO

LP 70

13-05-2013

LP 70

Tav.1: Carrozzeria
Tav.2: Impianto elettrico
Tav.3: Componenti in vasca
Tav.4: Circuito di lavaggio
Tav.5: Circuito di risciacquo
Tav.6: Lance di lavaggio
Tav.7: Pompa di lavaggio

Tav.1: Machine body
Tav.2: Electrical components
Tav.3: Components in the tank
Tav.4: Washing circuit
Tav.5: Rinsing circuit
Tav.6: Washing arms
Tav.7: Washing pump

Tab.1: Carrocería
Tab.2: Instalación eléctrica
Tab.3: Componentes en cuba
Tab.4: Circuito de lavado
Tab.5: Circuito d'enjuague
Tab.6: Brazos de lavado
Tab.7: Bomba de lavado

Tab.1: Carrosserie
Tab.2: Installation électrique
Tab.3: Composants de cuve
Tab.4: Circuit de lavage
Tab.5: Circuit de rinçage
Tab.6: Bras de lavage
Tab.7: Pompe de lavage

Taf.1: Verkleidung
Taf.2: Elektrische Anlage
Taf.3: Bauteile im Waschtank
Taf.4: Spuelschaltung
Taf.5: Nachspuelschaltung
Taf.6: Wascharme
Taf.7: Spuelpumpe

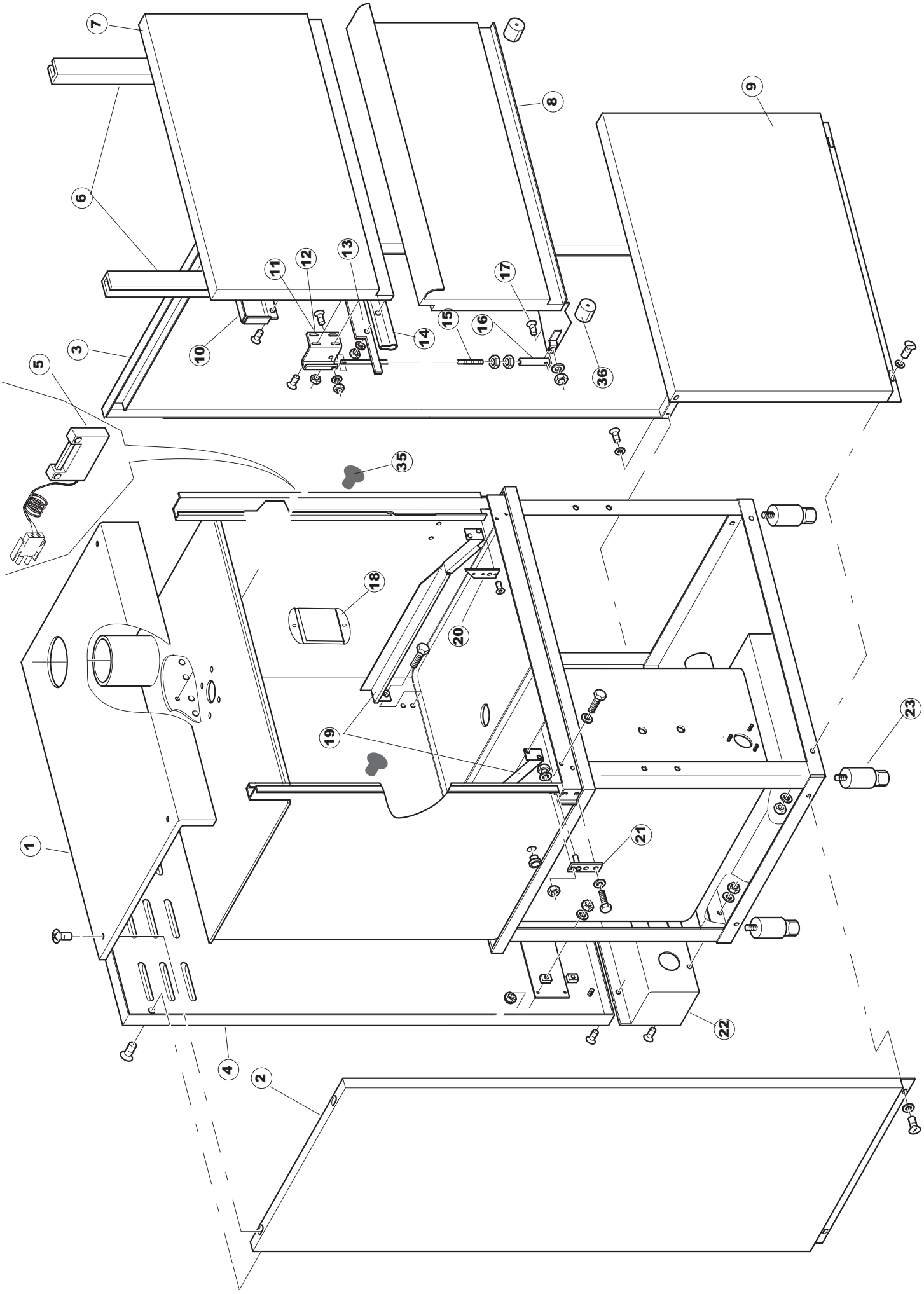
7
8
9
6
11
12
13
17
15
16
14
10
3
36
5
35
18
20
19
23
21
1
22
4
2

Listino componenti per pagina 1

1	EU42118	PANN.SUPERIORE U132 PANEL, UPPER U132 OB. PLATTE U132 PANN.SUPERIEUR U132 PANEL SUPERIOR U132	
2	EU42810	PANNELLO LATERALE SINISTRO LEFT SIDE PANEL PANEEL PANNEAU LATERAL GAUCHE PANEL LATERAL IZQDO.	
3	EU42814	PANNELLO LATERALE DESTRO SIDE PANEL PANEEL PANNEAU	
4	EU42622	PANNELLO RETRO BACK PANEL PANNEAU ARRIERE	
5	EU80871	MICRO MAGNETICO MAGNETIC DOOR SWITCH TUERKONTAKTSCHALTER CONTACTE MAGNETIQUE CONTACTO MAGNETICO	
6	EU44265	GUIDA PORTA DOOR SLIDING GUIDE TUER-GLEITENDER BAHN - OBEN - GUIDE GLISSANTE PORTE GUIA PUERTA	
7	EU42780	PORTA SUPERIORE Ù	
8	EU42570	PORTA INFERIORE LOWER DOOR PUERTA INFERIOR	
9	EU42124	PANNELLO ANTERIORE LP201 COMPLETO PANEL DELANT.LP201 COMPLETO.	
10	EU42042	BATTUTA SPORTELLO SUPERIORE U70 DOOR-LEDGE, SUPERIORE U70 TÜRANSCHLAG, OBEN U70 FEUILLURE VOLET SUP.U70 TOPE PUERTA SUPERIOR U70	
11	EU4108701	SQUADRA DESTRA AGGANCIO TIRANTE SPORTELLO SUPERIC RIGHT BRACKET FOR UPPER DOOR TIE ROD FASTENING RECHT-HATER FUER ANKUPPELN DER OBEREN TUER-STANG EQUERRE DROITE ACCROCHAGE TIRANT PORTE SUPERIEUR ESCUAD DCHA. FIJA TIR PUERTA SUP. LP PG ACAB.	
12	EU4108801	SQUADRETTA SINISTRA AGGANCIO TIRANTE SPORTELLO SUI LEFT BRACKET FOR UPPER DOOR TIE ROD CONNECTION FOI LINK-HALTER FUER ANKUPPELN OBEREN TUERSTANGE FUEI EQUERRE DROITE ACCROCHAGE TIRANTE PORTE SUPERIEUI ESCUAD IZQDA. FIJ TIR PUERTA SUP. LP PG ACAB.	
13	EU42782	SUPPORTO GUARNIZIONE SPORTELLO SUPERIORE PER LAVA DOOR PAKING SUPPORT - UPPER - FOR POT AN D PAN WASHI DICHTUNGSHALTERUNG DER TUER - OBEN - FU ER KOCHTOE SUPPORT JOINT PORTE SUPERIEUR POUR LAVE- CASSEROLE SOPORTE JUNTA PUERTA U70	
14	EU42783	GURANIZIONE PORTA DOOR SEAL	
15	EU44593	TIRANTE PORTA DOOR LEVER HEBEL TUER MONT TIRANT PORTE TIRANTE PUERTA	

16	EU41095	BUSSOLA TIRANTE PORTA 610/610H BUSHING, DOOR TIE-ROD 610/610H BUCHSE, TÜRZUGSTAB 610/610H DOUILLE TIRANT PORTE 610/610H CASQUILLO TIRANTE PUERTA 610/610H	
17	EU486078	VITE TC-CE M6X40 INOX SCREW TC-CE M6X40 INOX SCHRAUBE TC-CE M6X40 INOX VIS TC-CE M6X40 INOX TORNILLO TC-CE M6X40 INOX	
18	EU43527	PROTEZIONE GUARD SCHUTZVERKLEIDUNG PROTECTION SOPORTE DE PROTECCION	
19	EU42539	GUIDA CESTO RACK GUIDE KORBFUEHRUNG COULISSE PANIER GUIA CESTA	
20	EU4113501	SPESSORE LAT.SPORTELLO SIDE THICKNESS FOR DOOR SEITL. EINLEGERING FÜR TÜR EPAISSEUR LAT. VOLET GROSOR LAT. PUERTA	
21	EU4114501	PIASTRINA PERNO SPORTELLO U61.. PLATE, DOOR PIN U61.. PLATTE, TÜRANGEL U61.. PLAQUE PIVOT VOLET U61.. PLANCHITA PERNO PUERTA U61. .	
22	EU42621	PANNELLO RETRO INFERIORE REAR PANEL RUECKWANDVERKLEIDUNG PANNEAU ARRIERE PANEL PARTE POST. INFERIOR	
23	EU927006	PIEDE REGOLABILE X TRAINO FOOT, ADJUST. FOR TACK CONVEYOR VERSTELLFUSS FÜR KORBTR. PIED REGLABLE POUR AVANC. PATA REGULABLE X ACCION.	
35	EU929199	PIEDINO BATTUTA TIPO 30191.1.2(NERO) FOOT, BUFFER TYPE 30191.1.2 (NOIR) STÜTZFUSS, ANSCHLAG TYP 30191.1.2 (SCHWARZ) PIED FEUILL. TYPE 30191.1.2(NOIR) PATA TOPE TIPO 30191. 1. 2(NEGRO)	
36	EU41100	TAMPONE BATTUTA SPORTELLO LP DOOR BUFFER LP PUFFER, TÜRANSCHLAG LP TAMPON FEUILLURE VOLET LP TAMPON TOPE PUERTA LP	

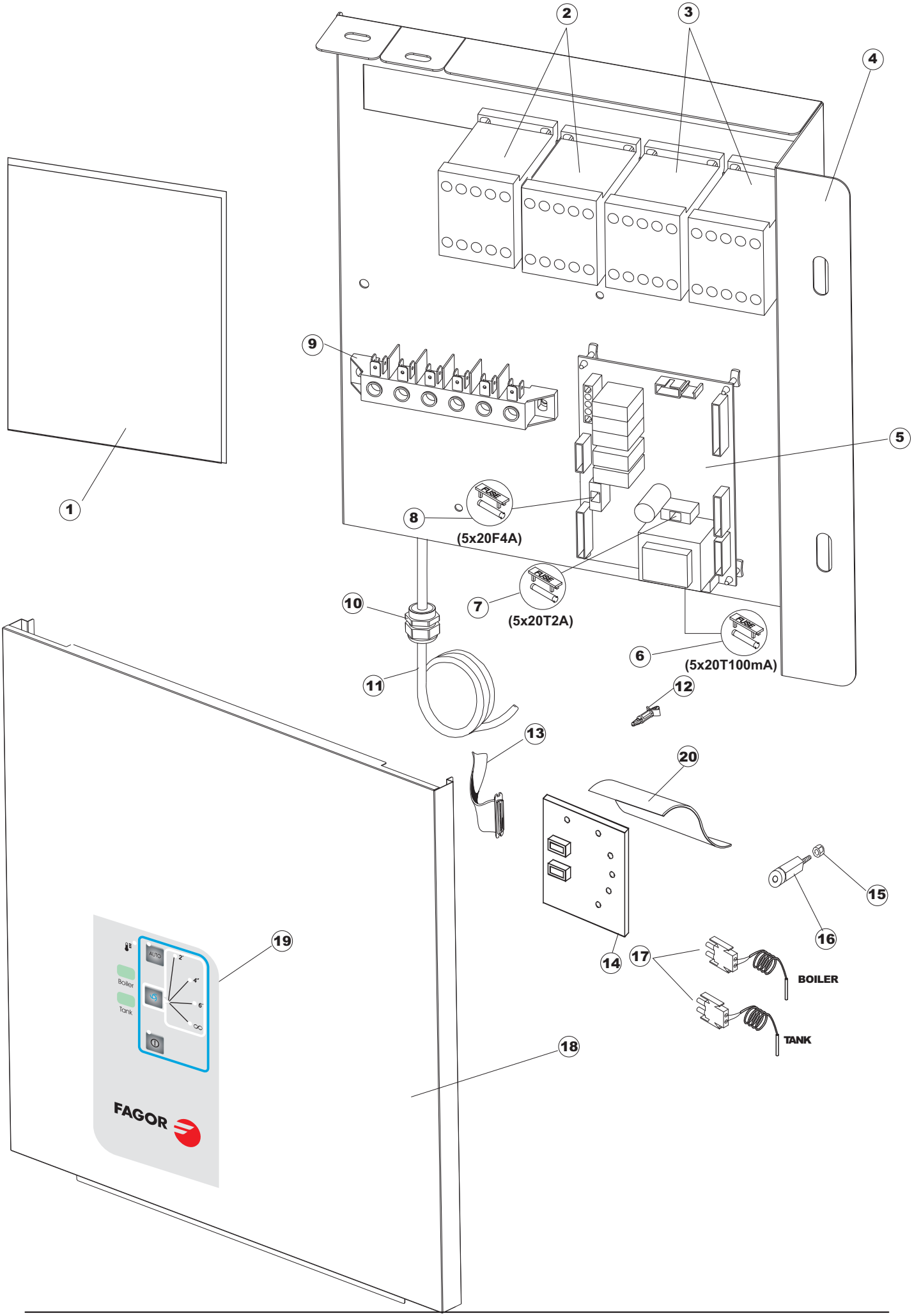
1
2
3
4
5
6
(5x20T100mA)
7
(5x20T2A)
8
(5x20F4A)
9
10
11
12
13
14
15
16
17
BOILER
TANK
18
19
20
AUTO
Boiler
Tank
FAGOR

Listino componenti per pagina 2

1	EU41416	COPERCHIO COVER DECKEL COUVERCLE TAPA PANEL	
2	EU73350	CONTATTORE 230/50-60HZ CONTACTOR 230-50/60HZ KONTAKT-GEBER 230-50/60HZ CONTACTEUR 230-50/60HZ CONTACTOR	
3	EU73351	CONTATTORE 230/50-60HZ CONTACTOR 230-50/60HZ KONTAKT-GEBER 230-50/60HZ CONTACTEUR 230-50/60HZ CONTACTOR TRIPOLAR 40A	
4	EU41415	PANNELLO PANEL PANEEL PANNEAU PANEL PORTACOMPONENTES	
5	EU215032-1	SCHEDA MAIN BOARD KARTE CARTE ELECTRONIQUE TARJETA GET50	
6	EU228012	FUSIBILE 5X20 T160MA FUSE 5X20 T160MA SICHERUNG FUSIBLE FUSIBLE 5X20 T160MA	
7	EU228011	FUSIBILE 5X20 T2A FUSE 5X20 T2A SICHERUNG 5X20 TA2 FUSIBLE FUSIBLE 5X20 T2A	
8	EU228004	FUSIBILE 5X20F 4A FAST FUSE, 5X20 4A FAST SICHERUNG, 5X20 4A FAST FUSIBLE 5X20 4A FAST FUSIBLE 5X20 4A FAST	
9	EU220011	* MORSETTIERA 5.POLI + TERRA FV.122 * TERMINAL BOARD, 5-POLES + EARTH FV.122 * KLEMMENBRETT, 5-POLIG + ERDUNG FV.122 * PLAQUE A BORNE 5POLES + TERRE FV.122 * BORNERO 5. POLOS + TIERRA FV. 122	
10	EUDEP521	PRESSACAVO PG21 (BER 4721) CABLE GLAND PG21 (BER 4721) KABELSCHELLE PG21 (BER 4721) SERRE CABLE PG21 (BER 4721) SUJETA-CABLE PG21 (BER 4721)	
11	EU80997	CAVO ALIMENTAZIONE MAIN CABLE ANSCHLUSSKABEL 400V CÂBLE ÉLECTRIQUE CABLE ALIMENTACION 5X2,5MM (H07RN-F)	
12	EUCWP2	PIEDINI SUPPORTO SCHEDA ELET.(ART.DRA6A) FEET, ELECTR.CARD SUPPORT(ART.DRA6A) STÜTZFÜSSE FÜR PLATINE (ART.DRA6A) PIEDS SUPPORT FICHE ELECTR.(ART.DRA6A) PATAS SOPORTE TARJETA ELECT. (ART.DRA6A)	
13	EU80933	CAVO FLAT COMANDI SUPERIORI CAPOT CABLE FLAT CAPOT FLACHKABEL TRISSE LIAISON CABLE FLAT MANDOS SUPERIORES CAPOT	
14	EU80889	TASTIERA COMANDI CONTROL KEYBOARD BEDINGUNGEN-TESTENBRETT TABLEAU A POUSSOIRS COMMANDES TECLADO DE MANDOS	
15	EU417119	DADO M3 PLASTICA BIANCO NUT, M3 PLASTIC WHITE SCHRAUBENMUTTER, M3 KUNST. WEISS ECROU M3 PLASTIQUE BLANC TUERCA M3 PLASTICO BLANCO	

16	EU419036	SPACER SPACER, M3 ABSTANDSSTÜCK, M3 ENTRETOISE M3 DISTANCIADOR M3	
17	EU231016	SONDA TEMPERATURA TEMP. PROBE TEMPERATURSONDE SONDE SONDA TEMPERATURA (AMPOLLA ACERO)	
18	EU42124	PANNELLO ANTERIORE LP201 COMPLETO PANEL DELANT.LP201 COMPLETO.	
19	EU41381	POLIESTERE POLYESTERE POLYESTERE POLYESTERE POLIESTER LAVA-OLLAS FAGOR	
20	EU69810	TENDINA COPERTURA TASTIERA PANNELLO ANTERIORE CURTAIN VORHANG RIDEAU CORTINA COPERTURA TECLADO PAN. DELANT.	

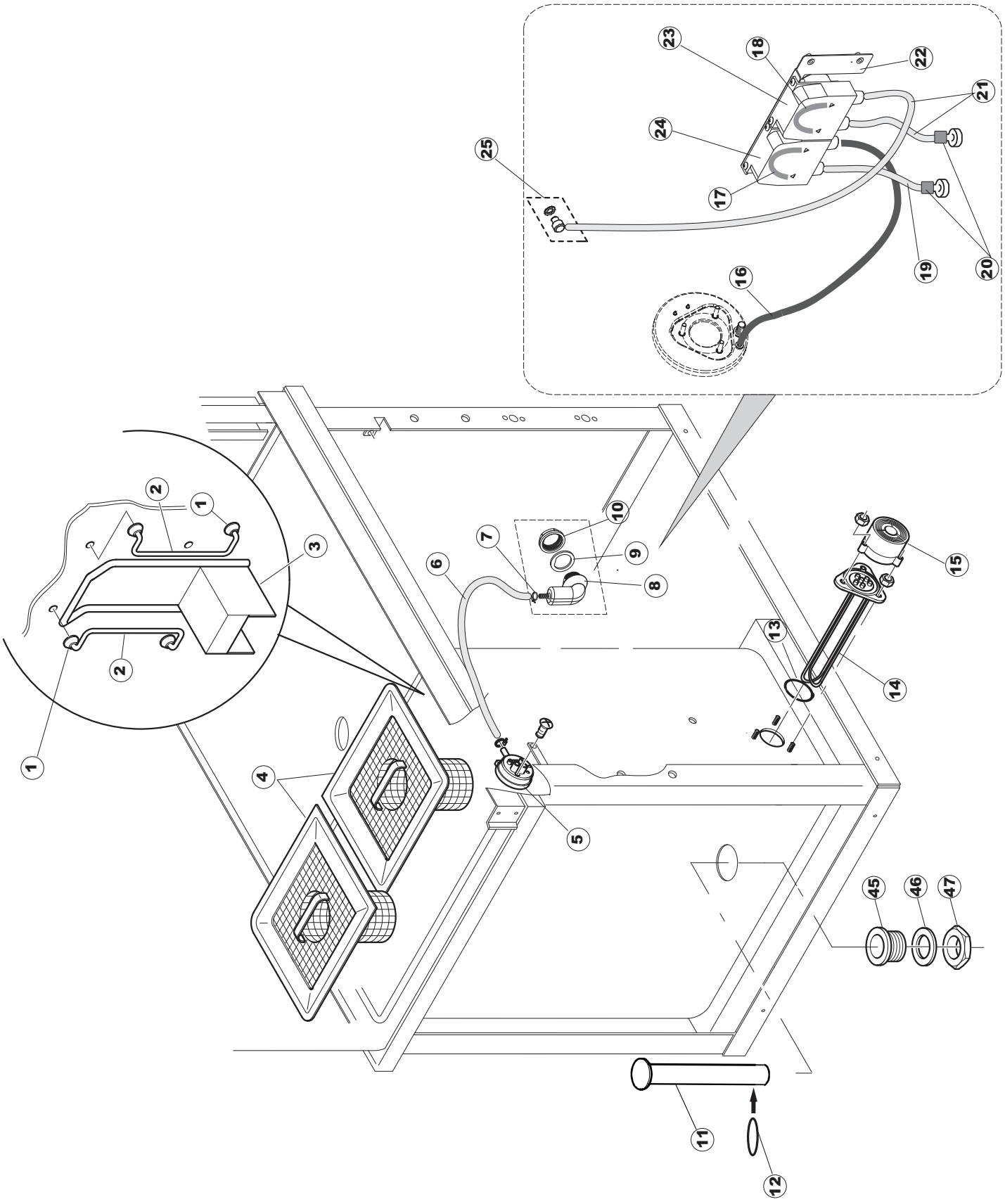
23
18
22
21
24
25
17
19
20
16
2
1
3
2
1
10
7
9
6
8
15
13
14
4
5
45
46
47
11
12

Listino componenti per pagina 3

1	EU472061	RONDELLA X GUIDA CESTO CL.3 WASHER, FOR BASKET GUIDE CL.3 UNTERLEGSCHEIBE, FÜR KORBFÜHRUNG KL.3 RONDELLE POUR GUIDE PANIER CL.3 ARANDELA X GUIA CESTA CL. 3	
2	EU42092	GUIDA FILTRO ASPIRAZIONE U70 GUIDE, EXHAUST. FILTER U70 FÜHRUNG, ABSAUG.FILTER U70 GUIDE FILTRE ASPIRATION U70 GUIA FILTRO ASPIRACION U70	
3	EU75661	FILTRO ASPIRAZIONE POMPA FILTER FILTER FILTRE FILTRO	
4	EU42165	FILTRO VASCA COMPL.U70 FILTER, TANK - COMPL.U70 FILTER, TANK - KOMPL.U70 FILTRE CUVE COMPL.U70 FILTRO CUBETA COMPL. U70	
5	EU926049	PRESSOSTATO 761999 180-70 PRESSURE SWITCH 761999 180-70 DRUCKSCHALTER 761999 180-70 PRESSOSTAT 761999 180-70 PRESOSTATO 761999 180-70	
6	EU143253	TUBO SILICONE 3X8 SILICON PIPE 3X8 SILIKONSCHLAUCH 3X8 TUYAU SILICONE 3X8 TUBO SILICONA 3X8	
7	EUCFF10073	FASCETTA A FILO 10073 COLLIER DE SERRAGE EN FIL D'ACIER 10073 SCHLAUCHSCHELLE 10073 WIRE HOSECLAMP 10073 ABRAZADERA CON HILO 10073	
8	EU107012	CAMPANA PRESSOSTATO (L) RV40-50-CAPOTE AIR TRAP LUFTFALLE PRISE D'AIR CAMPANA PRESOSTATO (L) RV40-50-CAPOTA	
9	EU437098	GUARNIZIONE NUOVA CAMP.PRESS. PACKING FOR AIR TRAP OF PRESSURE SWITCH DICHTUNG FUER LUFTFALLE JOINT PRISE D'AIRE PRESSOSTAT JUNTA NUEVA CAMP.PRES.	
10	EU417120	DADO PLASTICA GRIGIO PLASTIC NUT KUNSTSTOFFMUTTER 1-1/4 ECROU EN PLASTIQUE TUERCA PLASTICO GRIS	
11	EU42582	TROPPOPIENO OVERFLOW	
12	EUCGR4131NT	O-RING 4131 VITON NERO SH.70 O-ring 4131 BLACK SCREW SH.70 O-RING 4131 SCHWARZE SCHRAUBE SH.70 O-RING 4131 VIS J11312 SH.70 O-RING 4131 VITON NEGRO SH. 70	
13	EU456002	OR 48x6,2 O-ring 48x6,2 O-Ring 48x6,2 OR 48x6,2 OR 48x6,2	
14	EU230020C	KIT RESISTENZA REB230020 (8KW) KIT, RESISTANCE REB230020 (8KW) KIT, WIDERSTAND REB230020 (8KW) KIT RESISTANCE REB230020 (8KW) KIT RESISTENCIA REB230020 (8KW)	
15	EU69870	PROTEZIONE RESISTENZA BOILER BOILER HEATING ELEMENT PROTECTION HEIZUNGSCHUETZ DES WARMWASSERBEREITERS PROTECTION RESISTANCE BOILER PROTECCION RESISTENCIA CALENTADOR	

16	EU143005	TUBO PRESS.TP 5x11 (CASER/15/NL C4N) PIPE, PRESSURE SWITCH TP 5x11 (CASER/15/NL C4N) SCHLAUCH TP 5X11 (CASER/15/NL C4N) TUYAU PRESS.TP 5x11 (CASER/15/NL C4N) TUBO PRES. TP 5x11 (CASER/15/NL C4N)	
17	EU143266	TUBETTO SIL.5X10 MP2NERO+V.I(SEKO) TUBE 5X10 FLASCHEN 5X10 TUBE 5X10 TUBITO SILICONA 5X10 EMPALMES+VIROLAS	
18	EU143267	TUBETTO 6X10 TUBE 6X10 FLASCHEN 6X10 TUBE 6X10 TUBITO SANTOPRENE 6X10 EMPALMES+VIROLAS	
19	EUH.775601	TUBO 4x6 CRISTAL BLUE PVC PIPE 4x6 CRISTAL BLUE PVC ROHR 4x6 CRISTAL BLAU PVC TUYAU 4x6 CRISTAL BLEU PVC TUBO 4x6 CRISTAL AZUL PVC	
20	EU121075	FILTRO ASPIR.INOX(775239-001) FILTER, SUCT.INOX (775239-001) FUSSFILTER FILTRE ASPIR.INOX(775239-001) FILTRO ASPIR. INOX(775239-001)	
21	EU143194	TUBO 4x6 CRISTAL TRASPARENTE PIPE 4x6 CRISTAL, TRANSP. SCHLAUCH 4X6 CRISTAL, DURCHS. TUYAU 4x6 CRISTAL TRANSPARENT TUBO 4x6 CRISTAL TRASPARENTE	
22	EU80675	STAFFA DOSATORI PERISTALTICI BRACKET TRAGBUEGEL ETRIER SOPORTE DOSIFICADORES PERIST. PG ACABADO	
23	EU209039	DOSAT.PERIST.DETERG.NON REG.(NPG-3)BLU DOSING DETERGENT PUMP SPÜLMITTELBEHÄLTER POMPE DOSEUR PERIST. DETER. NON REG. DOSSIFIC.PERIST.DETERGENTE NO REG.	
24	EU209036	DOSAT.PERIST.BRILLANTANTE+NR P/F NPG DOSING PUMP RINSE-AID KLARSPÜLER POMPE DOSEUR PERISTALTIQUE RINCAGE DOSIFIC.PERIST. ABRILLANTADOR NO REG.	
25	EU468151	RACCORDO ENTRATA SAPONE CPL NM * SALDATO UNION, EXTRA DET. CPL NM * WELDED TANKEINLAUF CPL NM* RACCORD ENTREE SAVON CPL NM * SOUDE EMPALME ENTRADA JABON CPL NM * SOLDADO	
45	EU75871	PILETTA SCARICO DRAIN CONNECTION ABLAUFGARNITUR RACCORD DE VIDANGE ACCESORIO DE DRENAJE	
46	EU75873	GUARNIZIONE PACKING DICHTUNG JOINT JUNTA IMPULSION INF. CAPOT RV.	
47	EU75872	DADO PILETTA SCARICO RING NUT KUNSTSTOFFMUTTER ÉCROU EN PLASTIQUE TUERCA DE PLÁSTICO	

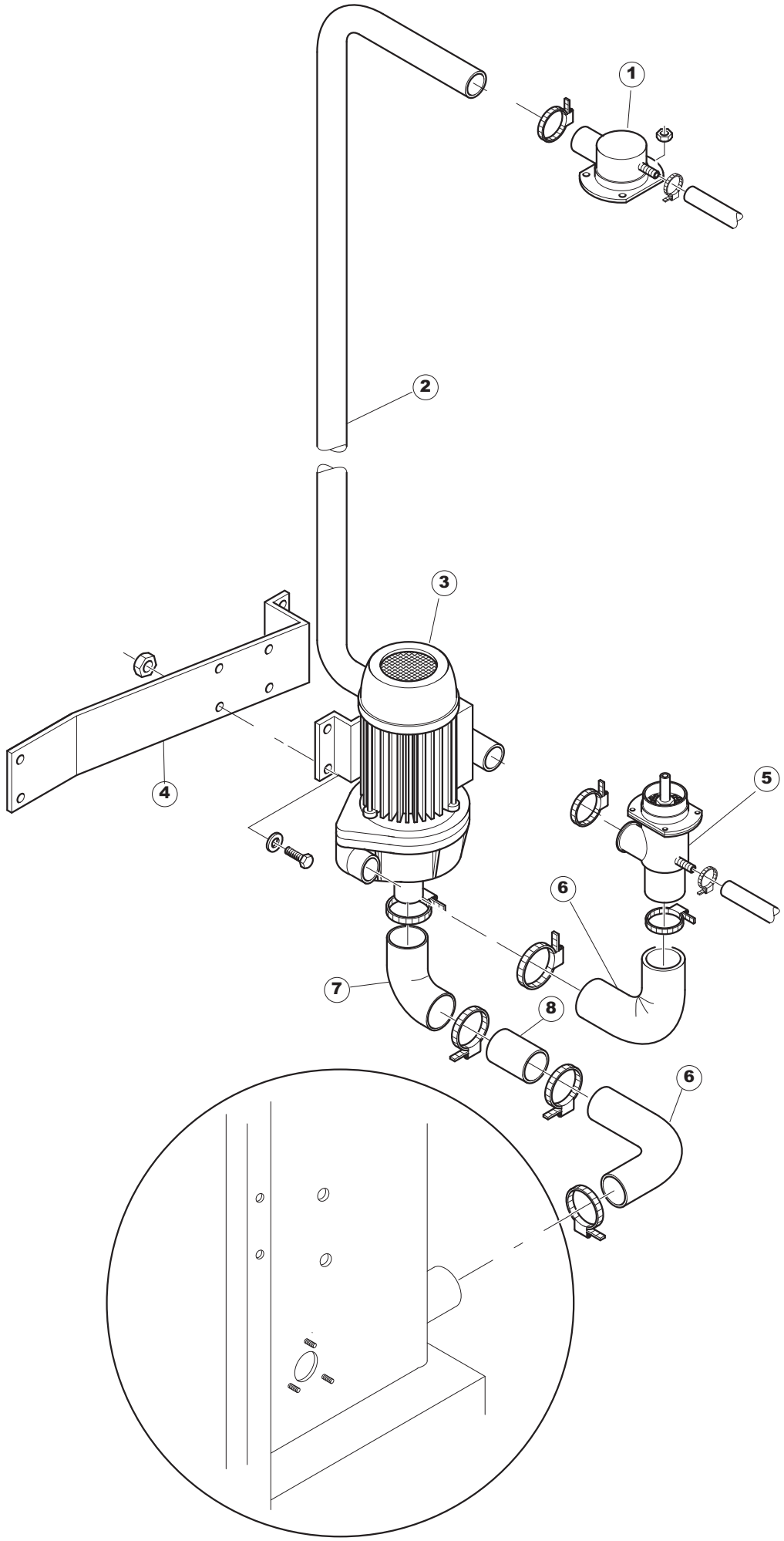
1
2
3
4
5
6
7
8
6

Listino componenti per pagina 4

1	EU4205901	RACCORDO LANCIA LAV.SUP.EW610H UNION, WASH.ARM UPP.EW610H VERBINDUNGSST., SPÜLARM OB.EW610H RACCORD RAMPE DE LAV.SUP.EW610H EMPALME LANZA LAV. SUP. EW610H	
2	EU43555	TUBO PIPE ROHR TUYAU TUBO LAVADO	
3	EU929174	POMPA 4HP 230/400-50 RUOT.(2250/C) PUMP 4HP 230/400-50 ROTAT.(2250/C) PUMPE 4HP 230/400-50 DREH.(2250/C) POMPE 4HP 230/400-50 PIV.(2250/C) BOMBA 4HP 230/400-50 RUOT. (2250/C)	
5	EU4206301	RACCORDO LANCIA LAV.INF.EW610.. UNION, WASH.ARM LOW.EW610.. VERBINDUNGSST., SPÜLARM UNTEN EW610.. RACCORD RAMPE DE LAV.INF.EW610.. EMPALME LANZA LAV. INF. EW610. .	
6	EU929164	GOMITO IN GOMMA P2703 SAIAG ELBOW, RUBBER P2703 SAIAG KNIESTÜCK, GUMMI P2703 SAIAG COUDE EN CAOUTCHOUC P2703 SAIAG CODO DE GOMA P2703 SAIAG	
7	EU926056	GOMITO GOMMA ASPIRAZIONE POMPA 120/140 ELBOW, RUBBER, EXHAUST. PUMP 120/140 KNIESTÜCK, GUMMI, ABSAUG.PUMPE 120/140 COUDE CAOUTCHOUC ASPIRATION POMPE 120/140 CODO GOMA ASPIRACION BOMBA 120/140	
8	EU42028	TRONCHETTO ASPIRAZIONE PUMP SUCTION ANSAUGSTUTZEN RACCORD D'ASPIRATION TRONCO ASPIRACION (EMBUTIDO)	

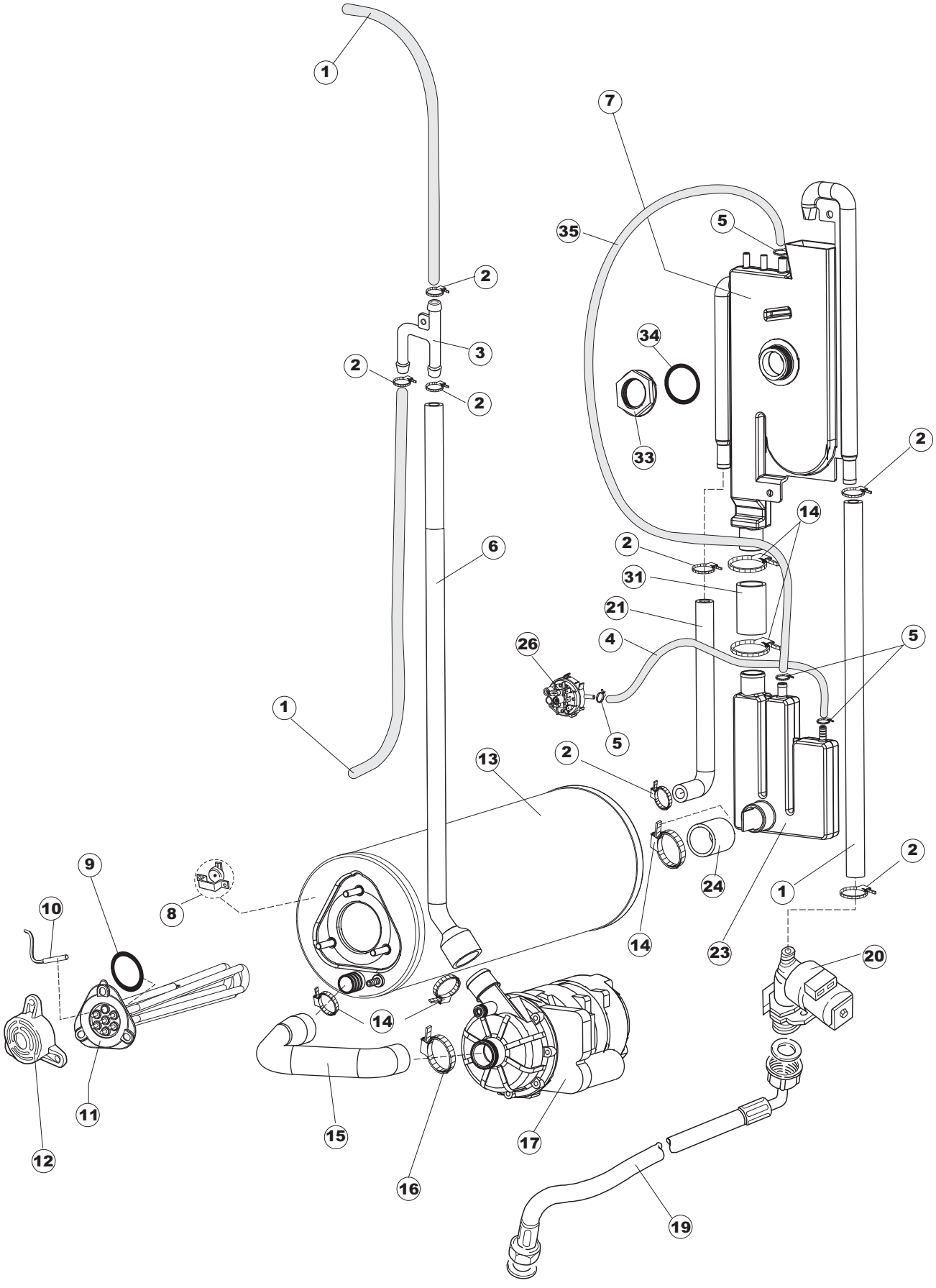
1
7
35
5
2
34
3
2
2
33
2
14
6
2
31
21
26
4
5
1
5
13
2
9
8
24
2
1
10
14
23
20
14
11
15
17
12
16
19

Listino componenti per pagina 5

1	EU143010	TUBO PRESS.TP 12X19.5 PIPE, PRESSURE SWITCH TP 12X19.5 ROHR, DRUCKSCHALTER TP 12X19.5 TUYAU PRESS.TP 12X19.5 TUBO PRES. TP 12X19. 5	
2	EU927322	FASCETTA NASTRO 14-24 CLAMP, TAPE 14-24 SCHLAUCHSCHELLE 12-22 BANDE DE SERRAGE CONVOYEUR 14-24 ABRAZADERA CINTA 12-22	
3	EUH.882974-001	RACCORDO A "T" IN PLASTICA PLASTIC COUPLING KUNSTSTOFFKUPPLUNG ACCOUPLEMENT EN PLASTIQUE EMPALME EN"T"(TS13) DE PLASTICO	
4	EU143131	TUBO GOMMA PIPE SCHLAUCH FUER DRUCKSCHALTER TUYAU VER CODIGO 143005	
5	EU423026	FASCETTA DOPPIO FILO 10.7 CLAMP SCHELLE COLLIER	
6	EU41525	TUBO MANDATA RISCIACQUO (CRP) PIPE, DELIVERY PIPE FOR RINSE (CRP) ZUFLUSSROHR FÜR NACHSPÜLEN (CRP) TUYAU REFOULEMENT RINCAGE (CRP) TUBO IMPULSION ENJUAGUE (CRP)	
7	EU144021	AIRGAP SPECIALE LA50 PLASTIC AIRGAP AIR GAP GEOFFNETER BEHAELTER AIRGAP SPECIAL LA50 AIRGAP ESPECIAL LA50	
8	EU926189	TERMOSTATO BOILER SIC.95ø THERMOSTAT, BOILER, SAF.95ø SICHERHEITSTHERMOSTAT BOILER 95° THERMOSTAT CHAUDIERE SEC. 95ø TERMOSTATO CALENTADOR SEG. 95ø	
9	EU456002	OR 48x6,2 O-ring 48x6,2 O-Ring 48x6,2 OR 48x6,2 OR 48x6,2	
10	EU231016	SONDA TEMPERATURA TEMP. PROBE TEMPERATURSONDE SONDE SONDA TEMPERATURA (AMPOLLA ACERO)	
11	EU230020C	KIT RESISTENZA REB230020 (8KW) KIT, RESISTANCE REB230020 (8KW) KIT, WIDERSTAND REB230020 (8KW) KIT RESISTANCE REB230020 (8KW) KIT RESISTENCIA REB230020 (8KW)	
12	EU69870	PROTEZIONE RESISTENZA BOILER BOILER HEATING ELEMENT PROTECTION HEIZUNGSCHUETZ DES WARMWASSERBEREITERS PROTECTION RESISTANCE BOILER PROTECCION RESISTENCIA CALENTADOR	
13	EU104061	BOILER CRP LA50 BOILER CRP BOILER CRP SURCHAUFFEUR CRP CALENTADOR CRP LA50	
14	EUCFS18	FASCETTA A VITE TORRO 20-32/9 CLAMP, HOSE-TYPE TORRO 20-32/9 SCHLAUCHSCHELLE 20-32/9 BANDE DE SERRAGE A VIS TORRO 20-32/9 ABRAZADERA CON TORNILLO TORRO 20-32/9	
15	EU69068	MANICOTTO ASPIRAZ.CRP LA50 INTAKE COUPLING LA50 SAUGMUFFE LA50 MANCHON D'ASPIRATION MANGUITO ASPIRAC.CRP LA50	

16	EU423008	FASCETTA D20X32X9 TIPO TORRO ACC.W1 CLAMP, D20X32X9 TYPE TORRO ACC.W1 SCHLAUCHSCHELLE D20X32X9 TYP TORRO ACC.W1 BANDE DE SERR. D20X32X9 TYPE TORRO ACC.W1 ABRAZADERA D20X32X9 TIPO TORRO ENC. W1	
17	EU80627	ELETTROPOMPA 200W 230V-1PH-50HZ CON CONDENSATOF PUMP PUMPE POMPE ELECTROBOMBA ENJUAGUE 200W	
19	EU929169	TUBO DI CARICO DEL TERMOPLASTICO PIPE, THERMOPLASTIC DELIVERY ZULAUFSCHLAUCH, WASSER THERMOPLAST TUYAU DE CHARG. DU THERMOPLASTIQUE TUBO DE CARGA DEL TERMOPLASTICO	
20	EU240018	VALVOLA DI CARICO 1 VIA CRP LOADING S.VALVE 1-WAY CRP ZUFLUSSVENTIL 1-WEG CRP SOUPAPE DE CHARG. 1 VOIE CRP VALVULA DE CARGA 1 VIA CRP	
21	EU127098	MANICOTTO SFIATO BOILER CRP->BT COUPLING LA50 MUFFE LA50 MANCHON LA50 MANGUITO ALIVIAD. CALENTADOR CRP->BT LA50	
23	EU144032	SISTEMA CARICAMENTO CRP CON CAMP.PRESS. PLASTIC AIRGAP AIR GAP GEOFFNETER BEHAELTER RESERVOIR AIRGAP SISTEMA CARGA CRP	
24	EU127095	MANICOTTO BOILER->SISTEMA CRP MANIFOLD MUFFE MANGUITO CALENTADOR->SISTEMA CRP	
26	EU224002	PRESSURE SWITCH - 110/60 PRESSURE SWITCH - 110/60 PRESSURE SWITCH - 110/60 PRESSURE SWITCH - 110/60 PRESSURE SWITCH - 110/60	
31	EU929171	TUBO GOMMA 20X30 HOSE, RUBBER 20X30 SCHLAUCH, GUMMI 20X30 TUYAU CAOUTCHOUC 20X30 TUBO GOMA 20X30	
33	EU417125	DADO IN PLAST.CON COLLARE(171571) NUT MUTTER ECROU TUERCA DE PLAST.CON COLLAR(171571)	
34	EU437104	GUARNIZIONE D45D33S2 EPDM 70SH RUBBER GASKET DICHTUNG JOINT JUNTA D45D33S2 EPDM 70SH	
35	EUH.165168	TUBO PVC 6X9 CRISTAL TRASP. RAUCLAIR PVC PIPE PVC SCHLAUCH TUYAU PVC * TUBO PVC 6X9 CRISTAL TRANSPARENTE	

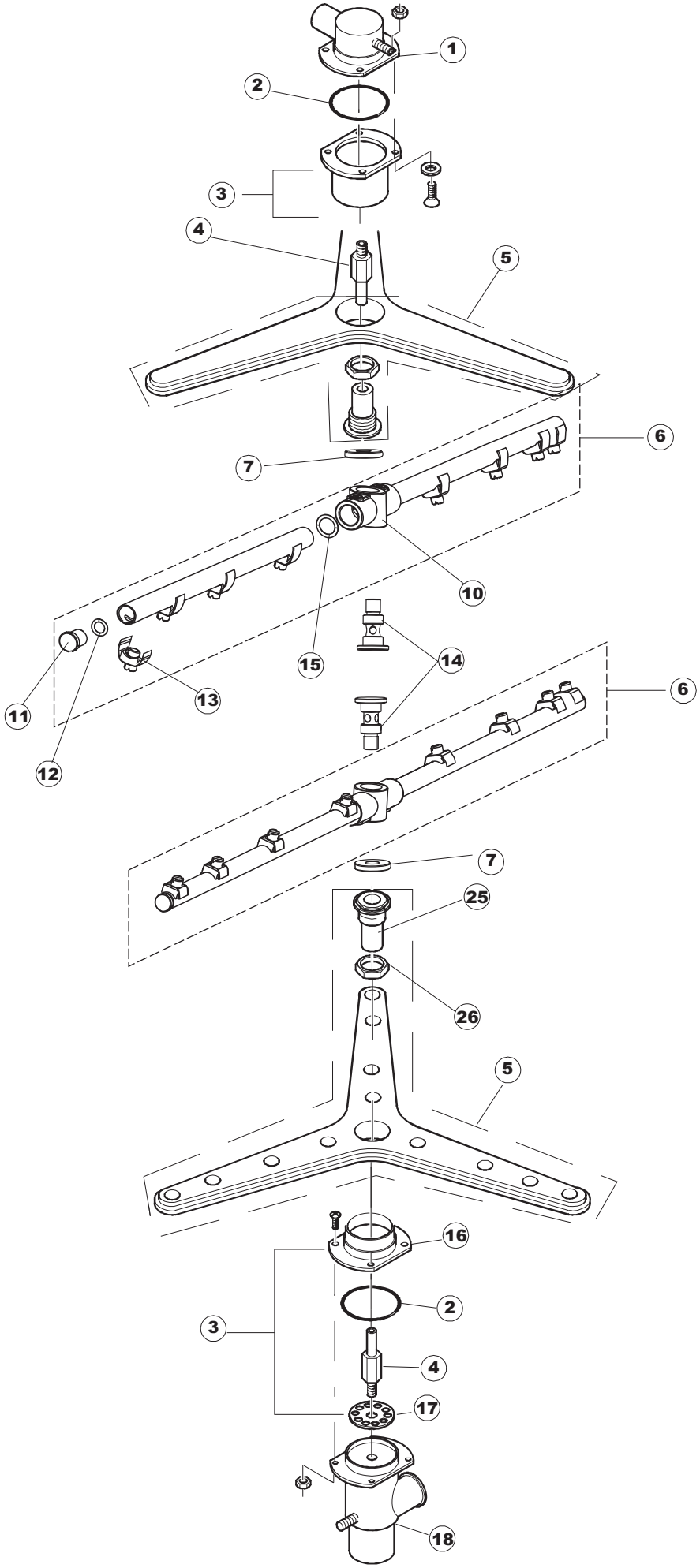
1
2
3
4
5
6
7
10
11
12
13
14
15
6
7
25
26
5
16
2
3
4
17
18

Listino componenti per pagina 6

1	EU4205901	RACCORDO LANCIA LAV.SUP.EW610H UNION, WASH.ARM UPP.EW610H VERBINDUNGSST., SPÜLARM OB.EW610H RACCORD RAMPE DE LAV.SUP.EW610H EMPALME LANZA LAV. SUP. EW610H	
2	EU926252	OR 4275 O-ring 4275 O-Ring 4275 OR 4275 OR 4275	
3	EU41064CP	CONTROFL.SUP.LANCIA LAV.U61/61H COUNTER-FLANGE, SUPP. FOR ARM-WASH U61/61H GEGENFLANSCH, OB. FÜR SPÜLLANZE U61/61H CONTRE-BRIDE SUP.RAMPE DE LAV.U61/61H CONTRABRIDA SUP. LANZA LAV. U61/61H	
4	EU42053	PERNO LANCIA LAV.INFER.U61 PIN, LOW.WASH. WASH-ARM U61 ZAPFEN, UNT.SPÜLLANZE U61 PIVOT RAMPE DE LAV.INFER.U61 PERNO LANZA LAV. INFER. U61	
5	EU929196	LANCIA DI LAV.TRIANGOLARE COMPL.U70.. WASH-ARM, WASH. - TRIANGULAR COMPL.U70.. SPÜLLANZE - DREIECK. KOMPL.U70.. RAMPE DE LAV.TRIANGULAIRE COMPL.U70.. LANZA DE LAV. TRIANGULAR COMPL. U70. .	
6	EU42677	BRACCIO RISCIACQUO	
7	EU80679	GHIERA ULTRA RINSE INOX NUT RING BAGUE VIROLA ULTRA RINSE INOX	
10	EU69632	CORPO PETTINE ARM BODY KOERPER DES NACHSPUELARMES CORPS BRAS CUERPO PEINE ENJUAGUE.	
11	EU926132	TAPPO PL.X BRACCIO DI RISC.(DWT312) CAP, PLASTIC FOR WASH. ARM (DWT312) PFROPFEN, KUNST. FÜR NACHSPÜLARM (DWT312) BOUCHON PL.POUR BRAS DE RINC.(DWT312) TAPON PL. X BRAZO DE ENJUAGUE (DWT312)	
12	EUCGR106	O-RING 106 GOMMA NITR. (6,75 X 1,78 NBR) O-ring 106 NITRILE RUBBER (6,75 X 1,78 NBR) O-RING 106 NITRILGUMMI (6,75 X 1,78 NBR) O-RING 106 CAOUTCHOUC NITRYLE (6,75 X 1,78 NBR) VER CÓDIGO 456030	
13	EU140036	SPRUZZO RISCIACQUO D.2,5 X TUBO D12 RINSE JET DUESE GLICEUR ROCIADOR ENJUAGUE D. 2,5	
14	EU80644	PERNO PIVOT BRAS RINCAGE	
15	EU456019	OR 2037 O-ring 2037 O-Ring 2037 OR 2037 OR 2037	
16	EU41064	CONTROFL SUPP LANCIA LAV LP SUPPORT UNTERLAGE SUPPORT CONTRABRIDA SUP. LANZA LAV. LP	
17	EU41185	PARZIALIZZATORE PL. DRAUGHT SHUTTER PL. DROSSELGERAT PL. ETRANGLEUR PL. PARCIALIZADOR PL.	

18	EU4206301	RACCORDO LANCIA LAV.INF.EW610.. UNION, WASH.ARM LOW.EW610.. VERBINDUNGSST., SPÜLARM UNTEN EW610.. RACCORD RAMPE DE LAV.INF.EW610.. EMPALME LANZA LAV. INF. EW610. .	
25	EU926129	SUPPORTO/MOZZO LANCIA LAVAGGIO SUPPORT/HUB FOR WASH-ARM HALTER/NABE FÜR SPÜLLANZE SUPPORT/MOYEU RAMPE DE LAVAGE SOPORTE/CUBO LANZA LAVADO	
26	EU80314	DADO LANCIA LAVAGGIO GRIGIO NUT, WASH-ARM GREY SCHRAUBENMUTTER, SPÜLLANZE GRAU ECROU RAMPE DE LAVAGE GRIS VER CODIGO 926128	

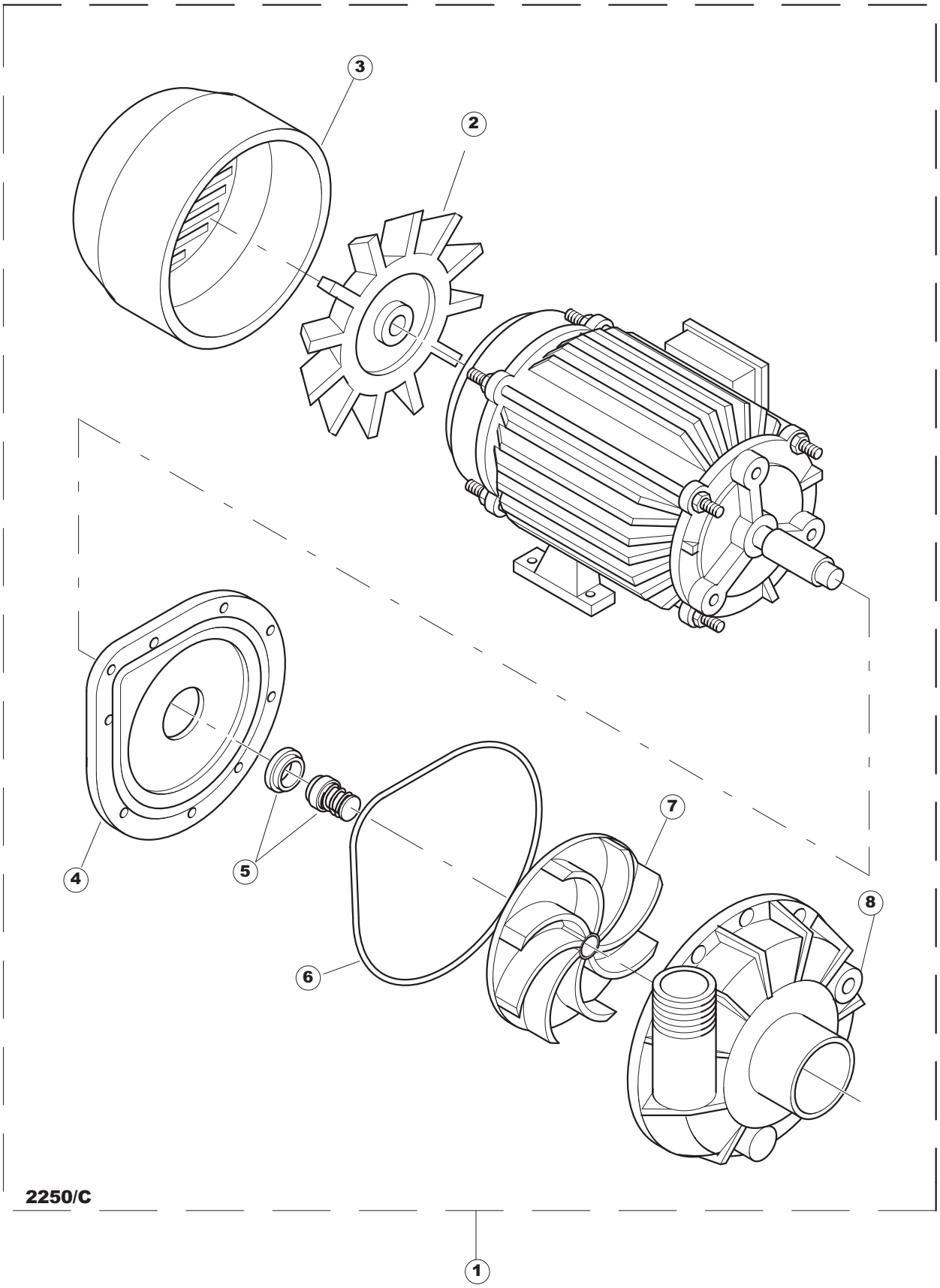
3
2
4
5
7
8
6
2250/C
1

Listino componenti per pagina 7

1	EU929174	POMPA 4HP 230/400-50 RUOT.(2250/C) PUMP 4HP 230/400-50 ROTAT.(2250/C) PUMPE 4HP 230/400-50 DREH.(2250/C) POMPE 4HP 230/400-50 PIV.(2250/C) BOMBA 4HP 230/400-50 RUOT. (2250/C)	
2	EU929189	VENTOLA ELETTROPOMPA 2250 FAN, MOTORPUMP 2250 GEBL., ELEKTROPUMPE 2250 VENT. ELECTROPOMPE 2250 VENTIL. ELECTROBOMBA 2250	
3	EU929188	COPRIVENTOLA ELETTROPOMPA 2250 FAN COVER, FOR MOTORPUMP 2250 GEBL.HAUBE, FÜR ELEKTROPUMPE 2250 COUVRE-VENT. ELECTROPOMPE 2250 CUBREVENTILADOR ELECTROBOMBA 2250	
4	EU929190	FLANGIA EL.POMPA 250 FLANGE, MOTORPUMP 250 FLANSCH, ELEKTROPUMPE 250 BRIDE ELECTROPOMPE 250 BRIDA ELECTROBOMBA 250	
5	EU929179	TENUTA MECCANICA PER POMPA 2250 SEAL, MECH. FOR PUMP 2250 DICHTUNG, MECH. FÜR PUMPE 2250 JOINT MECANIQUE POUR POMPE 2250 SELLO MECANICO PARA BOMBA 2250	
6	EU929180	OR POMPA 2250 O-ring PUMP 2250 O-Ring PUMPE 2250 OR POMPE 2250 OR BOMBA 2250	
7	EU929181	GIRANTE PER POMPA 2250/75-2250 PUMP IMPELLER 2250/75-2250 LAUFRAD, PUMPE 2250/75-2250 ROUE POUR POMPE 2250/75-2250 ROTOR PARA BOMBA 2250/75-2250	
8	EU929191	CORPO POMPA 2290/2250 PUMP SHELL, 2290/2250 PUMPENGEHAUSE, 2290/2250 CORPS POMPE 2290/2250 CUERPO BOMBA 2290/2250	