Mod./Type:	_70/... CPES - _90/... CPES SIMPLE	cod./num.	2531847.00
		data/date:	09/09/2014

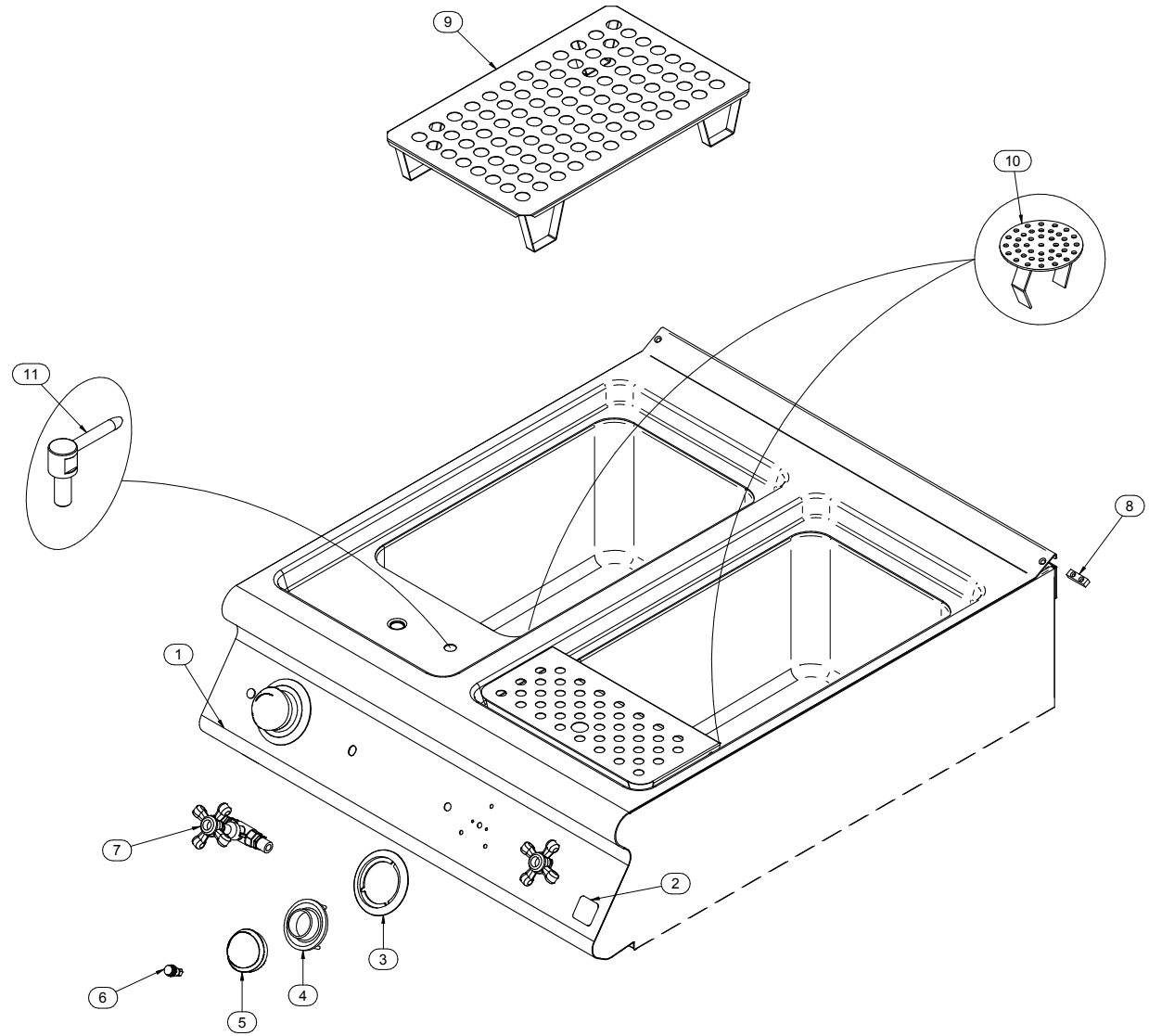

Mod./Type: **_70/... CPES - _90/... CPES**

SIMPLE

cod./num. 2531849.00

data/date: 09/09/2014

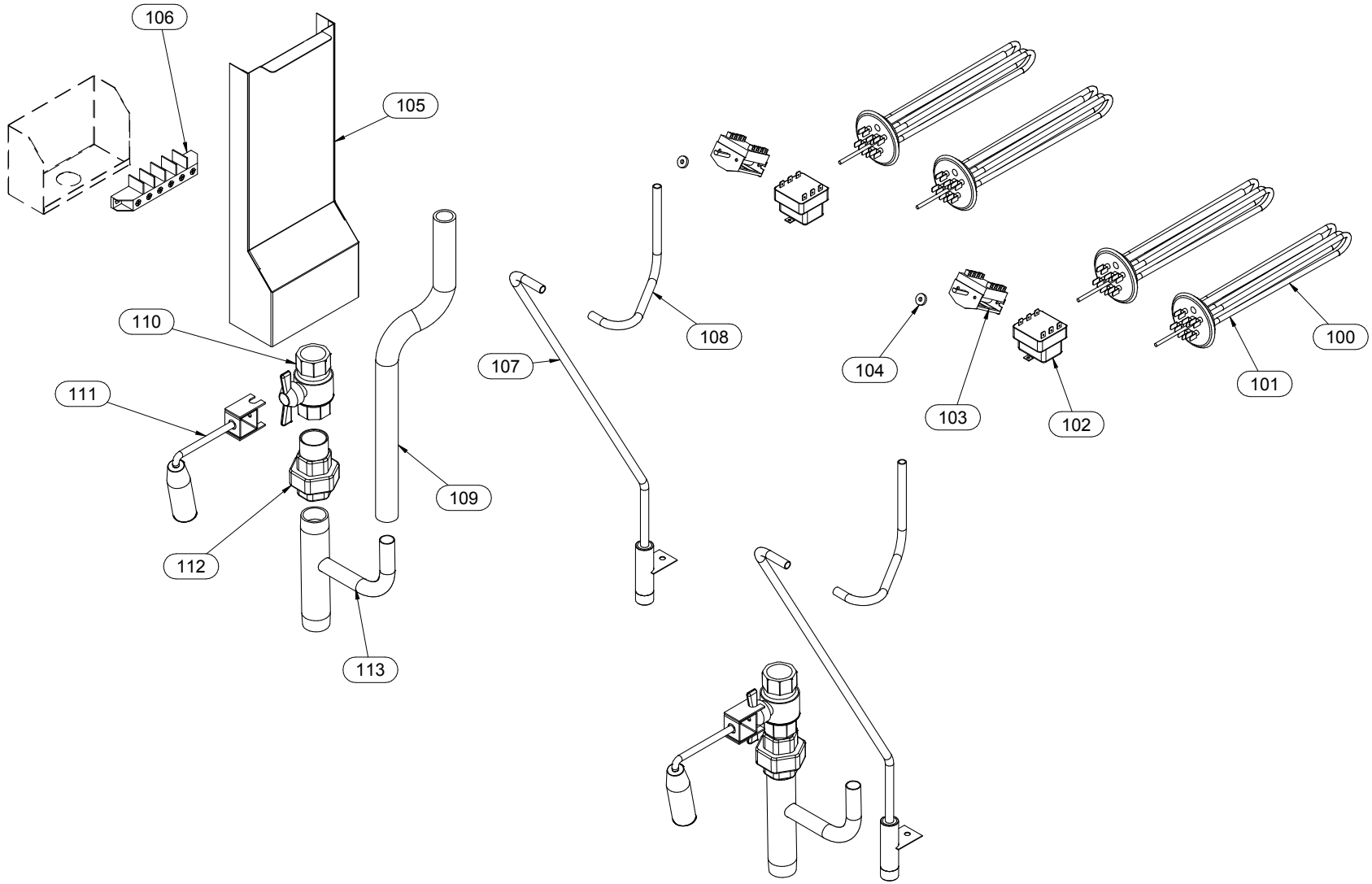

Mod./Type: **_70 - _90 .../40 ... - .../80 ... - .../120 ...**

VANO / CABINET - ...B - ...BE - ...BH2

cod./num. 2531578.00

data/date: 05/06/2014

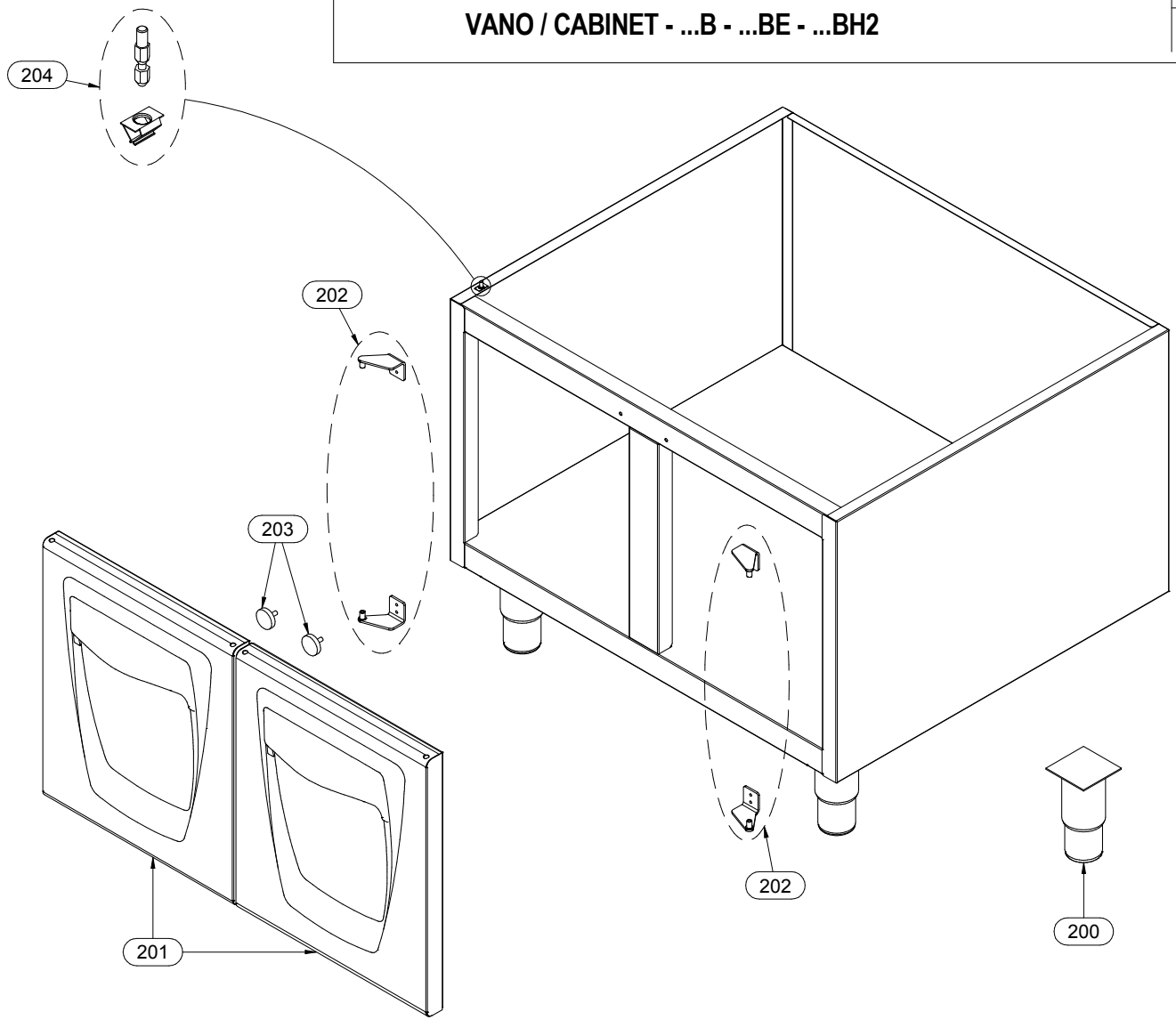

Mod.:	_70/… CPES - _90/... CPES SIMPLE			cod. / num. 2531848.00 data / date 09/09/2014 rif. / ref. 2531847.00		EM70/40 CPES	EM70/80 CPES	EM90/40 CPES	EM90/80 CPES	NOTE	
POS.	DESCRIZIONE	DESCRIPTION	DENOMINATION	BENENNUNG	COD.	Q. ty		Q. ty			
1	CRUSCOTTO	CONTROL PANEL	BANDEAU	BEDIENBLENDE	9111277.00	1		1			
					9111278.00		1		1		
2	MARCHIO	BRAND NAME	MARQUE	MARKENZEICHEN	982.021.00	1	1	1	1	**FROM: 15.12.2011**	**TO: 31.01.2014**
					982.023.00	1	1	1	1	**FROM: 01.02.2014**	**TO:...**
3	SERIGRAFIA	SCREEN PRINT	SÉRIGRAPHIE	SIEBDRUCK	910.169.00	1	2	1	2		
4	LABIRINTO	LABYRINTH	LABYRINTHE	LABYRINTH	256.235.00	1	2	1	2		
5	MANOPOLA	KNOB	BOUTON	DREHKNOPF	256.234.00	1	2	1	2		
6	LAMPADA SPIA ARANCIO	ORANGE INDICATOR LIGHT	LAMPE TEMOIN ORANGE	ORANGE KONTROLLAMPE	963.013.00	1	2	1	2		
7	RUBINETTO	TAP	ROBINET	WASSERHAHN	678.065.25	1	2	1	2		
8	PIASTRINA GIUNZIONE	FIXING PLATE	PLAQUETTE FIXAGE	BEFESTIGUNGSPLATTE	941.130.00	1	1	1	1		
9	FALSOFONDO	FALSE BOTTOM	FAUX-FOND	ABTROPFPLATTE	6111186.00	1	2			**FROM: 15.12.2011**	**TO: 21.10.2013**
					6111186.15	1	2			**FROM: 22.10.2013**	**TO:...**
					911.758.15			1	2		
10	FILTRO SCARICO	EXHAUST FILTER	FILTRE D'ECHAPPEMENT	ABLAUFFILTER	611.266.00	1	2	1	2		
11	EROGATORE	DISTRIBUTOR	AJUTAGE	SPRÜHDOSE	256.313.00	1	2	1	2		
12											
13											
14											
15											
16											
17											
18											
19											
20											
21											
22											
23											
24											
25											
26											
27											
28											
29											
30											
31											
32											

Mod.:	_70/... CPES - _90/... CPES SIMPLE			cod. / num. 2531850.00 data / date 09/09/2014 rif. / ref. 2531849.00		_70/40 CPES	_70/80 CPES	_90/40 CPES	_90/80 CPES	NOTE	
POS.	DESCRIZIONE	DESCRIPTION	DENOMINATION	BENENNUNG	COD.	Q. ty					
100	RESISTENZA	HEATING ELEMENT	RESISTANCE	HEINZELEMENT	665.074.15	2	4	-	-		
101	RESISTENZA	HEATING ELEMENT	RESISTANCE	HEINZELEMENT	665.074.15	-	-	2	4	FROM: 15.12.2011	TO: 30.09.2013
					665.103.00	-	-	2	4	FROM: 01.10.2013	TO:...
102	TERMOSTATO SICUREZZA	SAFETY THERMOSTAT	THERMOSTAT DE SECURITÉ	TEMPERATURBEGRENZER	661.051.00	1	2	1	2		
103	COMMUTATORE	CHANGE-OVER SWITCH	COMMUTATEUR	UMSCHALTER	661.037.00	1	2	1	2		
104	GUARNIZIONE	WASHER	GUARNITURE	DICHTUNGSRING	953.020.00	1	2	1	2		
105	PROTEZIONE	PROTECTION	PROTECTION	SCHUTZ	9221238.00	1	1	1	1	FROM: 15.12.2011	TO: 30.01.2014
					9221238.13	1	1	1	1	FROM: 01.02.2014	TO:...
106	MORSETTIERA	TERMINAL BOARD	BORNES	KLEMMENBRETT	663.036.00	1	1			FROM: 15.12.2011	TO: 30.01.2014
					663.018.00			1	1	FROM: 15.12.2011	TO: 30.01.2014
					M566050000	1	1	1	1	FROM: 01.02.2014	TO:...
107	TUBO CARICO	INLET HOSE	TUYAU DE CHARGEMENT	BELASTUNG-ROHR	256.312.00	1	2	1	2		
108	TUBO EROGATORE	REGULATOR PIPE	TUYEAU REGULATOR	WASSERLAST	256.311.00	1	2	1	2		
109	SCARICO TROPPOPIENO	OVERFLOW WATER OUTLET	VIDANGE DU TROP-PLEIN	ABLAUF DES ÜBERLAUFS	0831.2026.00	0,8	1,5	0,8	1,5	U. M. metri	U. M. meters
110	VALVOLA	VALVE	SOUPAPE	VENTIL	678.014.00	1	2	1	2		
111	MANIGLIA	HANDLE	POIGNÉE	HANDGRIFF	256.310.00	1	2	1	2		
112	RACCORDO	CONNECTOR	RACCORD	ANSCHLUSS	0716.10080.0	1	2	1	2		
113	TUBO SCARICO	EXHAUST PIPE	TUYAU D'ÉCHAPPEMENT	ABLAUFROHR	611.264.00	1	2	1	2		
114											
115											
116											
117											
118											
119											
120											
121											
122											
123											
124											
125											
126											
127											
128											
129											
130											
131											
132											
133											

Mod.:	_70/... - _90/… VANO / CABINET …B - …BE - …BH2			cod. / num. 2531579.00 data / date 05/06/2014 rif. / ref. 2531578.00		RICAMBI CONSIGLIATI - RECOMMENDED SPARE PARTS - PIÈCES DÉTACHÉES RECOMMANDÉES - EMPFOHLENEN ERSATZTEILE	EM70/40 ...	EM70/80 ...	EM70/120 ...	EM90/40 ...	EM90/80 ...	EM90/120 ...	NOTE	
POS.	DESCRIZIONE	DESCRIPTION	DENOMINATION	BENENNUNG	COD.		Q. ty							
200	PIEDINO	FOOT	PIED	STELLFUSS	912.090.00		4	4	4	4	4	4	FROM: 15.12.2011	TO: 17.05.2013
					912.090.14		4	4	4	4	4	4	FROM: 18.05.2013	TO:...
201	PORTA	DOOR	PORTE	TÜR	256.215.00		1	2	3	1	2	3		
202	COPPIA CERNIERE	GASKETS PAIR	COUPLE CHARNIÈRES	SCHARNIERPAAR	256.216.00		1	2	3	1	2	3		
203	MAGNETE	MAGNET	MAGNÉTO	MAGNET	684.007.00		1	2	3	1	2	3	FROM: 15.12.2011	TO: 01.01.2014
					984.006.00		1	2	3	1	2	3	FROM: 02.01.2014	TO:...
204	FISSAGGIO	FIXING	FIXAGE	BEFESTIGUNG	256.431.00		4	4	4	4	4	4	FROM: 04.05.2015	TO:...
205														
206														
207														
208														
209														
210														
211														
212														
213														
214														
215														
216														
217														
218														
219														
220														
221														
222														
223														
224														
225														
226														
227														
228														
229														
230														
231														
232														
233														
234														