DESPIECE TECNICO

Hornos Mixtos
Fours Mixtes
Combi Ovens
HeiBluftdämpfer
Forno Misti

SERIE "EVOLUTION"

Modelos:

HEM-10/21

Mayo 2005 May

Fagor Industrial

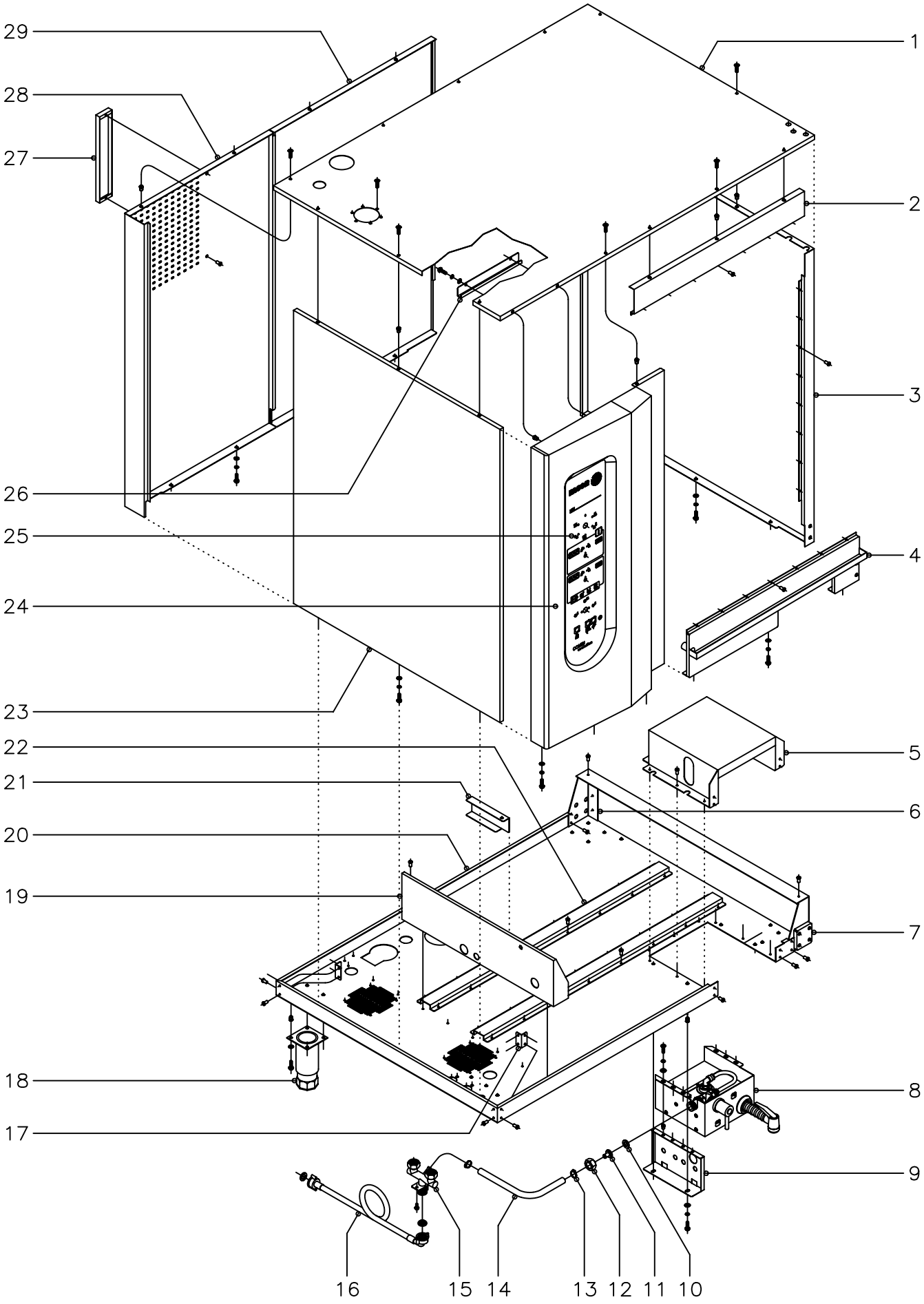

N plano	Firma	Fecha	Aparato	Lamina	
C–1643		5–2005	MUEBLE HORNO ELECTRICO HEM–10/21	1	Fagor Industrial S.Coop. Onate

MOD.	HORNO ELECTRICO	ZONA	MUEBLE	PLANO	C-1643

ITEM	CODIGO	DENOMINACION	TEXTO	HEM-10/21									NOTAS
1	T322803	Panel superior exterior	Outer upper panel	1									
	Q221342	Remache exagonal M-5	Hexagonal rivet M-5	13									
	Q152004	Tornillo aplastado M-5x13	Flat screw M-5x13	13									
2	T302804	Panel anterior superior	Upper front panel	1									
	Q412002	Remache tubular Ø4x7,5	Tubular rivet Ø4x7.5	7									Amarre a cuba
3	T302803	Panel exterior derecho	Right outer panel	1									
	Q012042	Tornillo exagonal M-6x15	Hexagonal screw M-6x15	3									Amarre inferior
	Q262040	Arandela grower A-6	Grower washer A-6	3									Amarre inferior
	Q232040	Arandela plana A-6	Flat washer A-6	3									Amarre inferior
	Q221343	Remache exagonal M-6	Hexagonal rivet M-6	3									Amarre inferior
	Q412002	Remache tubular Ø4x7,5	Tubular rivet Ø4x7.5	7									Amarre a cuba
4	T302848	Recogeaguas completo	Complete water collector	1									
	Q012042	Tornillo exagonal M-6x15	Hexagonal screw M-6x15	3									Amarre inferior
	Q262040	Arandela grower A-6	Grower washer A-6	3									Amarre inferior
	Q232040	Arandela plana A-6	Flat washer A-6	3									Amarre inferior
	Q221343	Remache exagonal M-6	Hexagonal rivet M-6	3									Amarre inferior
	Q412002	Remache tubular Ø4x7,5	Tubular rivet Ø4x7.5	7									Amarre a cuba
5	T302830	Alojamiento ducha	Shower housing	1									
	Q412002	Remache tubular Ø4x7,5	Tubular rivet Ø4x7.5	13									Amarre a base
6	T302816	Refuerzo apoyo base posterior	Rear base reinforcement	1									
	Q412002	Remache tubular Ø4x7,5	Tubular rivet Ø4x7.5	6									Amarre a base
7	T302836	Refuerzo apoyo base anterior com.	Com. front base holder reint	1									
	Q412002	Remache tubular Ø4x7,5	Tubular rivet Ø4x7.5	6									Amarre a base
	1100002860	**KIT DUCHA HORNO 10 / 21**	**OVEN SHOWER KIT 10 / 2**	**1**									
8	Z279506	Grupo ducha mini	Mini shower group	1									Componente kit
	Q152004	Tornillo aplastado M-5x13	Flat screw M-5x13	6									Componente kit
	Q262030	Arandela grower A-5	Grower washer A-5	6									Componente kit
	Q232030	Arandela plana A-5	Flat washer A-5	6									Componente kit
	Q221342	Remache exagonal M-5	Hexagonal rivet M-5	6									Componente kit

MOD.	HORNO ELECTRICO	ZONA	MUEBLE	PLANO	C-1643

ITEM	CODIGO	DENOMINACION	TEXTO	HEM-10/21									NOTAS
9	T302831	Amarre ducha	Shower anchoring	2									Componente kit
	Q012042	Tornillo exagonal M-6x15	Hexagonal screw M-6x15	3									Componente kit
	Q262040	Arandela grower A-6	Grower washer A-6	3									Componente kit
	Q232040	Arandela plana A-6	Flat washer A-6	3									Componente kit
	Q221343	Remache exagonal M-6	Hexagonal rivet M-6	3									Componente kit
10	Q306039	Arandela junta Ø25xØ16,1x1,5	Joint washer Ø25xØ16.1x1.	1									Componente kit
11	T305067	Entrada de agua a ducha	Shower water inlet	1									Componente kit
12	Q222013	Tuerca 3/4" gas	Nut 3/4" Gas	1									Componente kit
13	Q881302	Abrazadera 12 - 20	Clamp 12 - 20	2									Componente kit
14	3676900	Tubo de goma Ø17xØ10x850	Rubber tubing Ø17xØ10x85	1									Componente kit
15	T305063	Entrada de agua completa	Complete water inlet	1									Componente kit
	Q012021	Tornillo exagonal M-4x10	Hexagonal screw M-4x10	2									Componente kit
16	Z601114	Manguera entrada de agua	Water inlet hose	1									
	Z701132	Filtro-junta entrada de agua	Filter-joint water inlet	1									
	Q307031	Junta manguera Ø24xØ14x3	Hose joint Ø24xØ14x3	1									
17	T302837	Cantonera base	Base corner protector	2									
	Q412002	Remache tubular Ø4x7,5	Tubular rivet Ø4x7.5	8									Amarre a base
18	X260151	Pata regulable	Ajustable leg	4									
	Q012031	Tornillo exagonal M-5x10	Hexagonal screw M-5x10	16									
	Q242030	Arandela abanico A-5	Fan shaped washer A-5	16									
	Q221342	Remache exagonal M-5	Hexagonal rivet M-5	16									
19	T322808	Apoyo cuerpo de horno	Oven body holder	1									
	Q412002	Remache tubular Ø4x7,5	Tubular rivet Ø4x7.5	13									Amarre a base
20	T322801	Base exterior de horno 10 / 21	Oven outer base 10 / 21	1									
21	T352803	Apoyo desague	Waste pipe support	1									
22	T302818	Refuerzo longitudinal base	Base longitudinal reinforcen	2									
	Q412002	Remache tubular Ø4x7,5	Tubular rivet Ø4x7.5	32									Amarre a base
23	T302806	Panel exterior izquierdo	Left outer panel	1									

MOD.	HORNO ELECTRICO	ZONA	MUEBLE	PLANO	C-1643

ITEM	CODIGO	DENOMINACION	TEXTO	HEM-10/21									NOTAS
	Q012042	Tornillo exagonal M-6x15	Hexagonal screw M-6x15	3									Amarre inferior
	Q262040	Arandela grower A-6	Grower washer A-6	3									Amarre inferior
	Q232040	Arandela plana A-6	Flat washer A-6	3									Amarre inferior
	Q221343	Remache exagonal M-6	Hexagonal rivet M-6	3									Amarre inferior
24	T322806	Panel portamandos	Control panel	1									
	Q012042	Tornillo exagonal M-6x15	Hexagonal screw M-6x15	3									Amarre inferior
	Q262040	Arandela grower A-6	Grower washer A-6	3									Amarre inferior
	Q232040	Arandela plana A-6	Flat washer A-6	3									Amarre inferior
	Q221343	Remache exagonal M-6	Hexagonal rivet M-6	3									Amarre inferior
	Q412002	Remache tubular Ø4x7,5	Tubular rivet Ø4x7.5	8									Amarre a cuba
25	T323008	Serigrafia HEM-10 / 21	Serigraphy HEM-10 / 21	1									
26	T302834	Canaleta portamandos	Control feed through	1									
	Q012042	Tornillo exagonal M-6x15	Hexagonal screw M-6x15	2									
	Q262040	Arandela grower A-6	Grower washer A-6	2									
	Q232040	Arandela plana A-6	Flat washer A-6	2									
	Q221343	Remache exagonal M-6	Hexagonal rivet M-6	2									
27	T302835	Separador posterior	Rear separator	1									
	Q412002	Remache tubular Ø4x7,5	Tubular rivet Ø4x7.5	2									
28	T322811	Panel posterior exterior elec.	Electrical outer rear panel	1									
29	T302850	Panel posterior exterior comun	Common outer rear panel	1									
	Q012042	Tornillo exagonal M-6x15	Hexagonal screw M-6x15	4									Amarre inferior
	Q262040	Arandela grower A-6	Grower washer A-6	4									Amarre inferior
	Q232040	Arandela plana A-6	Flat washer A-6	4									Amarre inferior
	Q221343	Remache exagonal M-6	Hexagonal rivet M-6	4									Amarre inferior

N plano
C-1644

Firma

Fecha
5-2005

Aparato
HORNO ELECTRICO HEM-10/21

PUERTA

Lamina
2

Fagor Industrial S.Coop.
Oñate

FAGOR

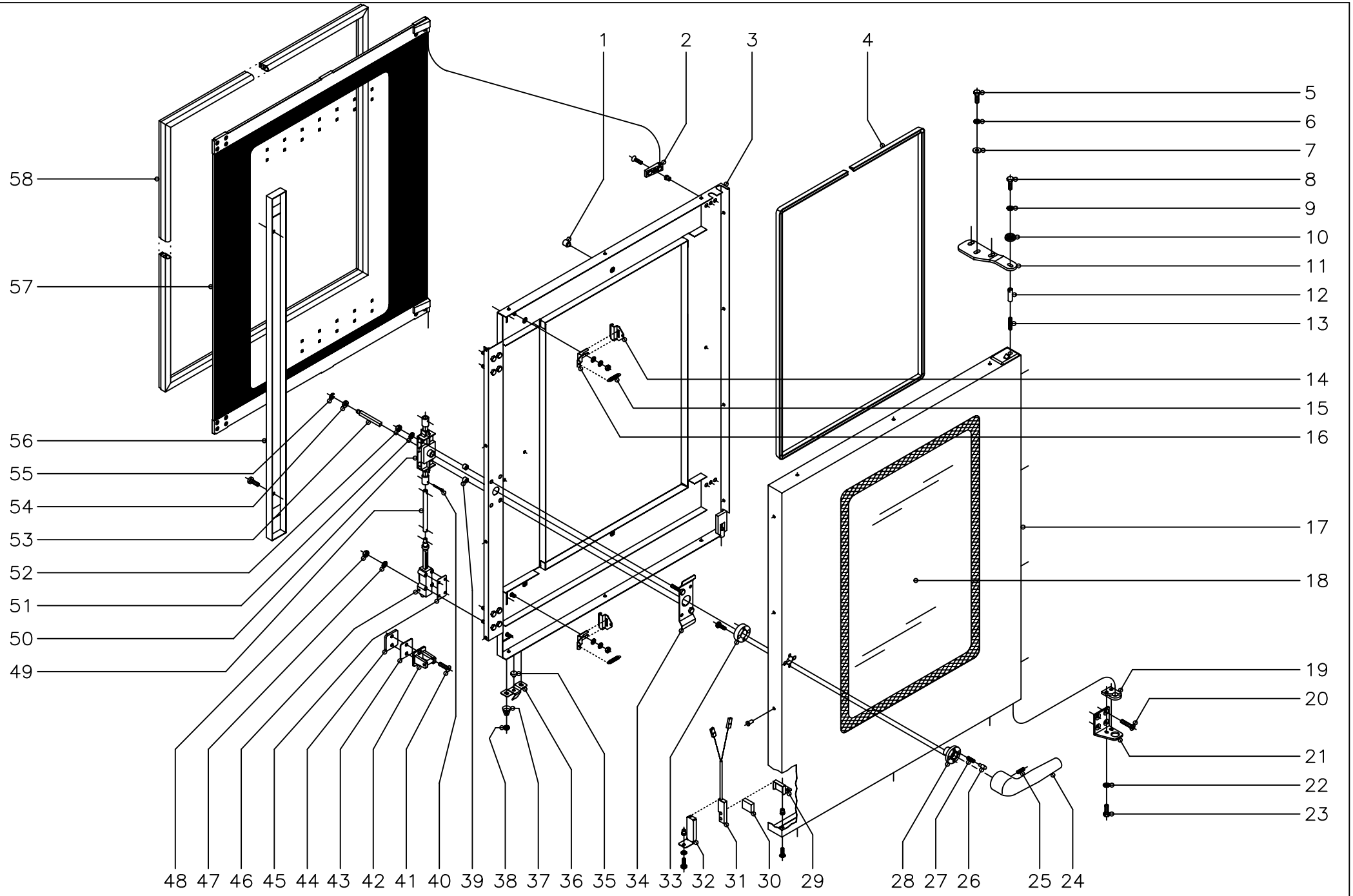

MOD.	HORNO ELECTRICO	ZONA	PUERTA	PLANO	C-1644

ITEM	CODIGO	DENOMINACION	TEXTO	HEM-10/21										NOTAS
1100003101		**KIT Puerta completa 10/21**	**Complete door KIT 10/21**	**1**										
1	T300513	Tope cristal interior	Inner glass door stop	6										
2	R670615	Base de bisagra	Hinge base	2										
	Q042032	Tornillo avellanado M-5x15	Countersunk screw M-5x15	2										
	Q222011	Remache exagonal M-5	Hexagonal rivet M-5	2										
3	T300501	Contrapuerta completa	Complete inner door	1										
4	3715200	Junta cristal L=2500	Glass joint L=2500	1										
5	Q012053	Tornillo exgonal M-8x20	Hexagonal screw M-8x20	3										
6	Q242050	Arandela abanico A-8	Fan shaped washer A-8	3										
7	Q302025	Arandela plana Ø8,4x20x1,5	Flat washer Ø8,4x20x1.5	3										
8	Q012042	Tornillo exagonal M-6x15	Hexagonal screw M-6x15	1										
9	Q242040	Arandela abanico A-6	Fan shaped washer A-6	1										
10	R662807	Arandela amarre puerta	Door anchoring washer	1										
11	T300520	Bisagra superior	Upper hinge	1										
12	R660534	Eje superior	Upper shaft	1										
13	Z850519	Resorte	Spring	1										
14	T300514	Pestillo sujecion cristal interior	Inner glass fastening latch	2										
15	R660605	Muelle tensor pestillo	Latch tensor spring	2										
16	R670612	Base de pestillo	Latch base	2										
	Q302022	Arandela plana Ø16xØ6x1,2	Flat washer Ø16xØ6x1.2	2										
	Q242030	Arandela abanico A-5	Fan shaped washer A-5	2										
	Q162030	Tuerca exagonal M-5	Hexagonal nut M-5	2										
17	T300523	Panel puerta completa	Complete door panel	1										
	Q412002	Remache tubular Ø4x7,5	Tubular rivet Ø4x7.5	14										
18	T300505	Cristal exterior	Outer glass	1										
19	R660549	Guia eje inferior	Lower shaft guide	1										
20	Q062040	Tornillo avellanado M-6x16	Countersunk screw M-6x16	4										
21	T300521	Bisagra inferior	Lower hinge	1										

MOD.	HORNO ELECTRICO	ZONA	PUERTA	PLANO	C-1644

ITEM	CODIGO	DENOMINACION	TEXTO	HEM-10/21									NOTAS
22	Q242040	Arandela abanico A-6	Fan shaped washer A-6	2									
23	Q012041	Tornillo exagonal M-6x10	Hexagonal screw M-6x10	2									
24	T130502	Manilla	Handle	1									
25	Q132042	Varilla roscada M-6x15	Threaded rod M-6x15	1									
26	T130507	Piton enganche	Fastener spike	2									
27	T130506	Resorte	Spring	2									
28	T130515	Guia manilla	Handle guide	1									
29	T300525	Soporte iman	Magnet holder	1									
30	T300526	Iman	Magnet	1									
31	Z100522	Interruptor magnetico	Magnetic switch	1									
32	T302819	Soporte interruptor magnet. puerta	Door magnetic switch holde	1									
	Q221342	Remache exagonal M-5	Hexagonal rivet M-5	1									
	Q242030	Arandela abanico A-5	Fan shaped washer A-5	1									
	Q152004	Tornillo aplastado M-5x13	Flat screw M-5x13	1									
33	T130514	Soporte resortes	Spring holder	1									
	Q032032	Tornillo alomado M-5x15	Curved screw M-5x15	2									
34	T130511	Suplemento fijacion cerradura	Lock fixing supplement	1									
35	T300518	Tapon cierre canaleta	Feed through closing plug	1									
36	T300517	Chapa cierre canaleta	Feed through closing cover	1									
37	T300524	Resorte conico	Conical spring	2									
38	Q162030	Tuerca exagonal M-5	Hexagonal nut M-5	2									
39	Z608410	Casquillo	Bushing	2									
40	Q352001	Pasador de aletas Ø2x15	Cotter pin Ø2x15	4									
41	Q042045	Tornillo avellanado M-6x30	Countersunk screw M-6x30	4									
42	T110506	Enganche	Fastener	2									
43	R660538	Calzo de enganche	Coupling chock	4									
44	T300519	Suplemento enganche	Fastener supplement	2									
45	T080503	Suplemento elemento cierre	Closing element supplemen	6									
46	T080504	Elemento de cierre	Closing component	2									

MOD.	HORNO ELECTRICO	ZONA	PUERTA	PLANO	C-1644

ITEM	CODIGO	DENOMINACION	TEXTO	HEM-10/21									NOTAS
47	Q242030	Arandela abanico A-5	Fan shaped washer A-5	8									
48	Q162030	Tuerca exagonal M-5	Hexagonal nut M-5	8									
49	T300507	Tubo alargadera	Extension tubing	2									
50	T130509	Mecanismo de cierre	Closing mechanism	1									
51	Q262040	Arandela muelle A-6	Spring washer A-6	2									
52	Q162040	Tuerca exagonal M-6	Hexagonal nut M-6	2									
53	T130508	Eje de manilla	Handle shaft	1									
54	T130505	Casquillo	Bushing	1									
55	Q271033	Arandela de seguridad Ø6	Safety washer Ø6	1									
56	T300508	Tapa cierre puerta	Door closing cover	1									
	Q032031	Tornillo alomado M-5x10	Curved screw M-5x10	2									
57	**1100003102**	**KIT Cristal interior compl. 10/21**	**Complete inner glass KIT**	**1**									
58	T300500	Junta puerta	Door joint	1									

N plano	C-1645
Firma	
Fecha	5-2005
Aparato	HORNO ELECTRICO HEM-10/21
MUEBLE INTERIOR	
Lamina	3
Fagor Industrial S.Coop. Oñate	FAGOR

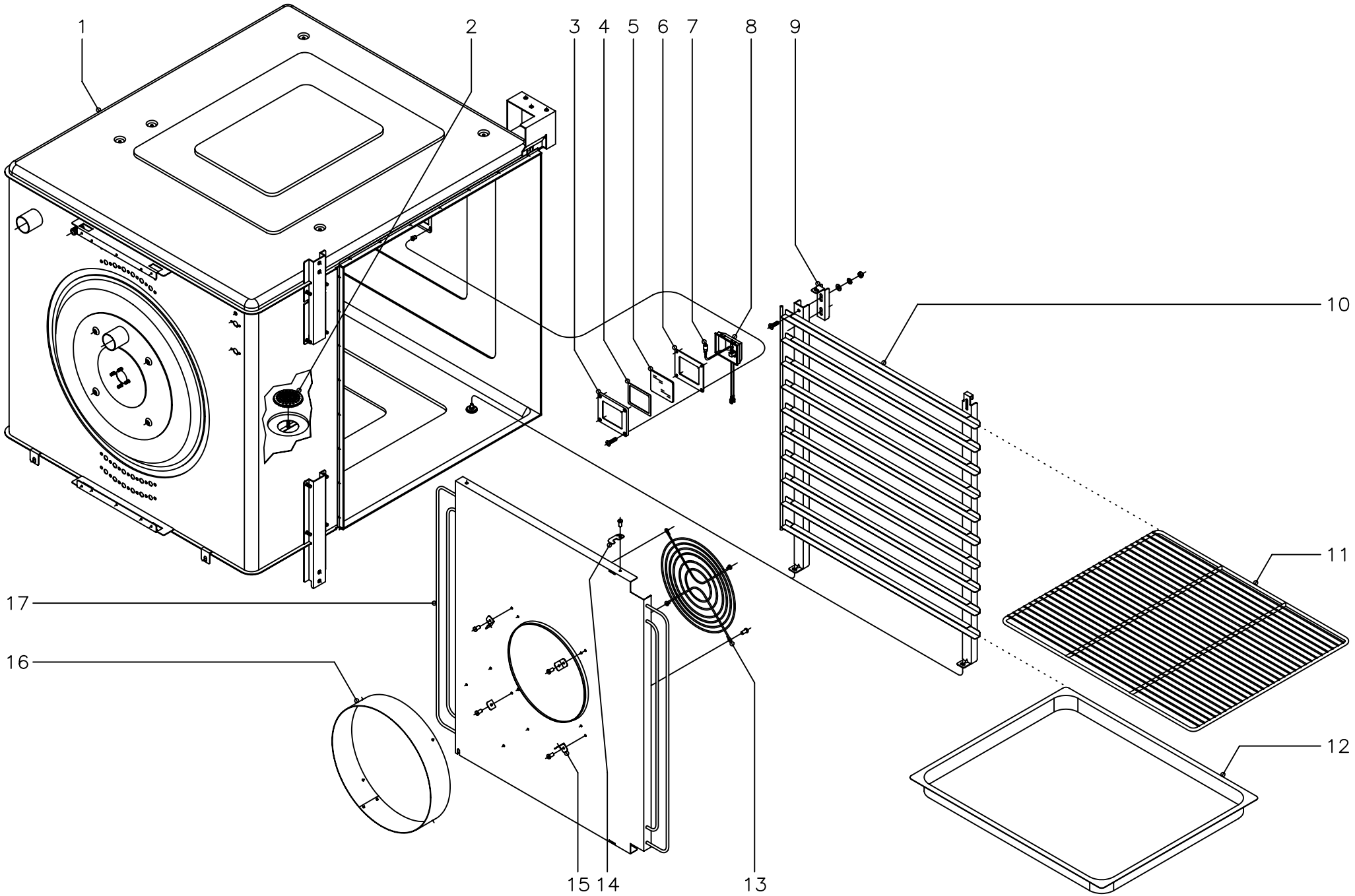

MOD.	HORNO ELECTRICO	ZONA	MUEBLE INTERIOR	PLANO	C-1645

ITEM	CODIGO	DENOMINACION	TEXTO	HEM-10/21									NOTAS
1	T322600	Cuerpo interior completo	Complete inner body	1									
2	T302625	Filtro desague completo	Complete waste pipe filter	1									
3	T303047	Pletina amarre lampara	Lamp anchoring platen	1									
	Q042022	Tornillo avellanado M-4x15	Countersunk screw M-4x15	4									
	Q222041	Remache exagonal M-4	Hexagonal rivet M-4	4									
4	T303027	Junta interior lampara	Lamp inner joint	1									
5	T303025	Cristal lampara	Lamp glass	1									
6	T303026	Junta exterior lampara	Lamp outer joint	1									
7	R663013	Lampara 10 W., 12 V.	Lamp 10 W, 12 V	1									
8	T303023	Portalamparas	Lamp holder	1									
9	T302660	Suplemento guias	Guide supplement	2									
	Q152004	Tornillo aplastado M-5x13	Flat screw M-5x13	4									
	Q302022	Arandela plana Ø16xØ6x1,2	Flat washer Ø16xØ6x1.2	4									
	Q242030	Arandela abanico A-5	Fan shaped washer A-5	4									
	Q162030	Tuerca exagonal M-5	Hexagonal nut M-5	4									
10	T302620	Conjunto guias derecho	Right guide set	1									
s/n	T302624	Conjunto guias izquierdo	Left guide set	1									
11	R682676	Parrilla de horno G.N.-2/1	Oven grill G.N.-2/1	1									
12	R032605	Bandeja de horno G.N.-2/1, h=40	Oven tray G.N.-2/1, h=40	1									
13	R662661	Proteccion de turbina	Turbine protection	1									
	Q412002	Remache tubular Ø4x7,5	Tubular rivet Ø4x7.5	4									
14	T302635	Enganche cubreventilador	Fan cover fastener	2									
	Q412002	Remache tubular Ø4x7,5	Tubular rivet Ø4x7.5	2									
15	T302643	Fijacion suplemento cubreventilad.	Fan cover suplement bindin	4									
	Q412002	Remache tubular Ø4x7,5	Tubular rivet Ø4x7.5	4									
16	T322603	Suplemento cubreventilador	Fan cover supplement	1									
	Q412002	Remache tubular Ø4x7,5	Tubular rivet Ø4x7.5	4									
17	T302633	Cubreventilador completo	Complete fan cover	1									

MOD.	HORNO ELECTRICO	ZONA	MUEBLE INTERIOR	PLANO	C-1645

ITEM	CODIGO	DENOMINACION	TEXTO	HEM-10/21									NOTAS
	T302650	Aislante techo 970x850x20	Roof insulator 970x850x20	3									Vitrofib
	T302650	Aislante base 970x850x20	Base insulator 970x850x20	1									Vitrofib
	T302651	Aislante lateral decho. 890x850x20	Right side insulator 890x85	2									Vitrofib
	T302653	Aislante lateral izdo. 1230x900x10	Left side insulator 1230x90	1									Fieltro con alumi.
	T302654	Aislante lat. Izdo.inferi. 860x160x10	Side insulator Lower left 86	1									Fieltro con alumi.
	T302659	Aislante izdo. motor 265x265x10	Motor left insulator 265x265	1									Fieltro con alumi.
	T302652	Aislante posterior 970x880x20	Rear insulator 970x880x20	2									Vitrofib
	T302658	Aislante frontal vertical 1000x30x10	Front vertical insulator 1000	1									Fieltro con alumi.
	T322604	Aislante portamand. 1000x120x20	Control insulator 1000x120x	1									Fieltro con alumi.
	T302667	Arandela sujecion aislante	Insulator fixing washer	13									
	Q221026	Clip sujecion rapida D-4	Quick fastening clip D-4	13									

N plano
C-1646

Firma

Fecha
5-2005

Aparato
HORNO ELECTRICO HEM-10/21

TURBINA

Lamina
4

Fagor Industrial S.Coop.
Onate

FAGOR

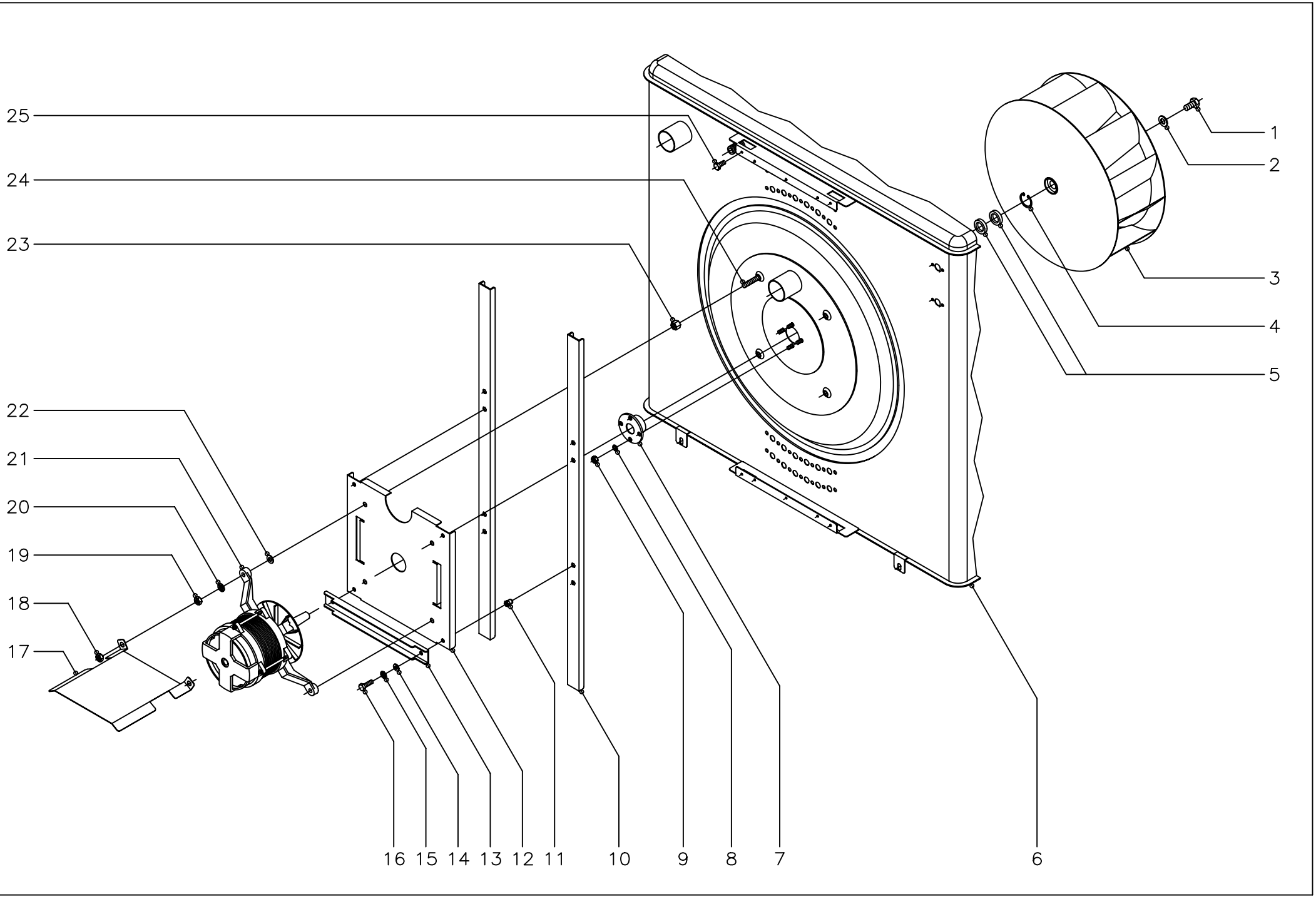

MOD.	HORNO ELECTRICO	ZONA	TURBINA	PLANO	C-1646

ITEM	CODIGO	DENOMINACION	TEXTO	HEM-10/21									NOTAS
1	Q012063	Tornillo exagonal M-10x20	Hexagonal screw M-10x20	1									
2	R763010	Arandela seguridad Hanning	Hanning safety washer	1									
3	T303015	Turbina	Turbine	1									
4	Q302023	Anillo de seguridad Ø 28x1,2	Safety ring Ø 28x1.2	1									
5	R662627	Reten Ø 28xØ 17x7	Retainer Ø 28xØ 17x7	2									
6	-	Costado izquierdo de horno	Left side of oven	1									
7	T302629	Casquillo reten	Bushing retainer	1									
8	Q262040	Arandela grower A-6	Grower washer A-6	4									
9	Q162040	Tuerca exagonal M-6	Hexagonal nut M-6	4									
10	T302628	Perfil soporte motor	Motor holder profile	2									
11	Q221342	Remache exagonal M-5	Hexagonal rivet M-5	4									
12	T302627	Soporte motor	Motor holder	1									
13	T302649	Refuerzo motor	Motor reinforcement	2									
14	Q232030	Arandela plana A-5	Flat washer A-5	4									
15	Q242030	Arandela abanico A-5	Fan shaped washer A-5	4									
16	Q012032	Tornillo exagonal M-5x15	Hexagonal screw M-5x15	4									
17	T302665	Tejadillo motor	Motor roof	1									
18	Q162050	Tuerca exagonal M-8	Hexagonal nut M-8	2									
19	Q162050	Tuerca exagonal M-8	Hexagonal nut M-8	4									
20	Q242050	Arandela abanico A-8	Fan shaped washer A-8	4									
21	T323022	Motor de turbina	Turbine motor	1									
22	Q232050	Arandela plana A-8	Flat washer A-8	4									
23	T302638	Distanciador motor	Motor spacer	4									
24	Q012056	Tornillo exagonal M-8x40	Hexagonal screw M-8x40	4									
25	Q012031	Tornillo exagonal M-5x10	Hexagonal screw M-5x10	4									

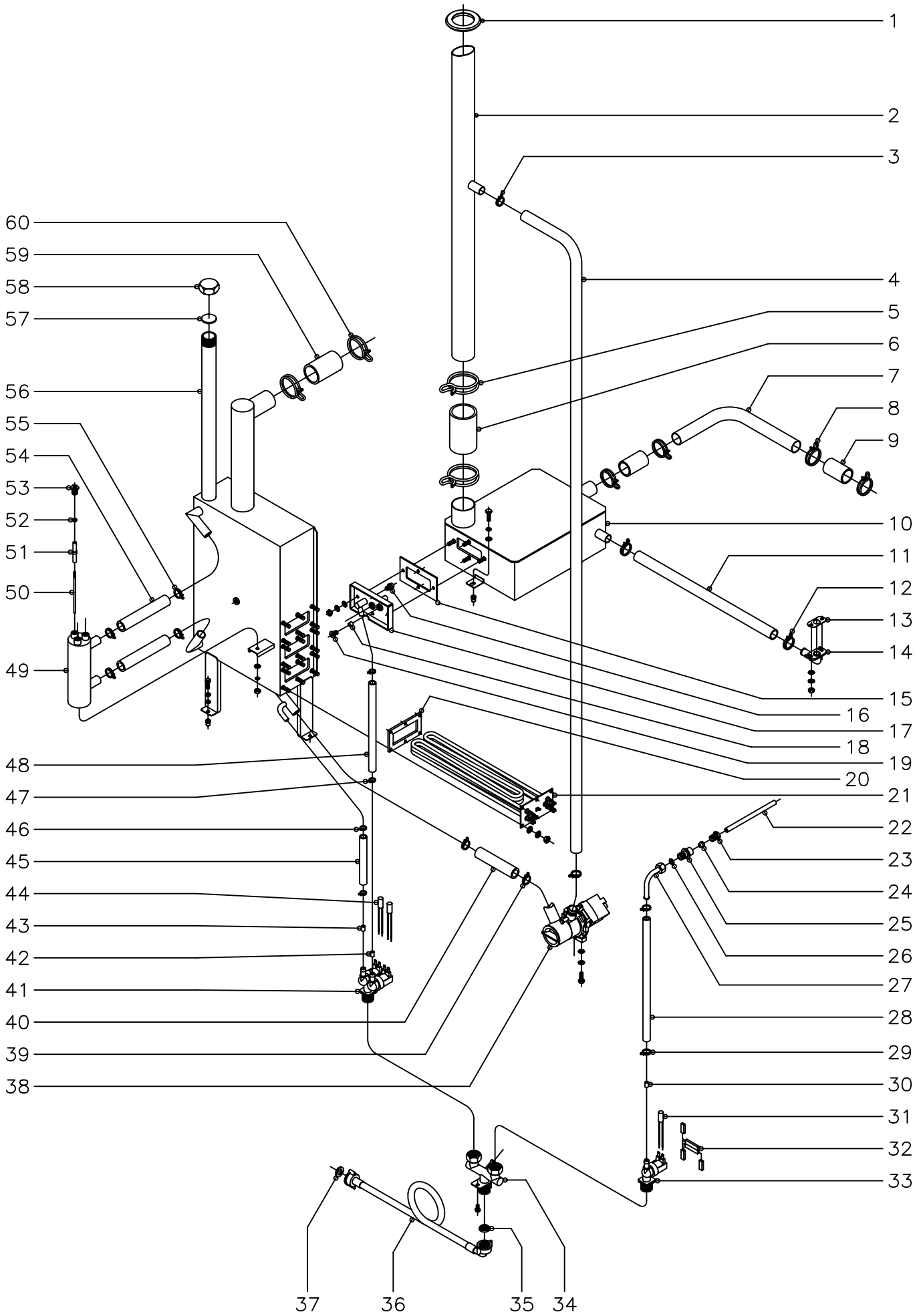

N plano	Firma	Fecha	Aparato	Lamina	
C−1647		5−2005	CONDUCCIONES AGUA,VAPOR Y DESAGUE HORNO ELECTRICO HEM−10/21	5	Fagor Industrial S.Coop. Oñate

MOD.	HORNO ELECTRICO	ZONA	CONDUCCIONES AGUA,VAPOR Y DESAGUE	PLANO	C-1647

ITEM	CODIGO	DENOMINACION	TEXTO	HEM-10/21									NOTAS
1	R662813	Pasamuros chimenea	Wire protection Chimney	1									
2	T325050	Chimenea completa	Complete chimney	1									
3	Q901311	Abrazadera elastica Ø26,7 - 28,1	Elastic clamp Ø26.7 - 28.1	2									
4	3715600	Tubo silicona Ø26xØ18x900	Silicone tubing Ø26xØ18x9	1									
5	Q901313	Abrazadera elastica 62 - 66	Elastic clamp 62 - 66	2									
6	R345020	Tubo empalme generador	Generator coupling tubing	1									
7	T325017	Conducto desagüe horno	Oven drain conduct	1									
8	Q901307	Abrazadera elastica Ø37,7 - 39,7	Elastic clamp Ø26.7 - 39.7	4									
9	3714100	Tubo silicona Ø38xØ31x60	Silicone tubing Ø38xØ31x6	2									
10	T325013	Caja desagüe completa	Complete drainage box	1									
	Q012042	Tornillo exagonal M-6x15	Hexagonal screw M-6x15	2									
	Q232040	Arandela plana A-6	Flat washer A-6	2									
	Q262040	Arandela grower A-6	Grower washer A-6	2									
	Q162040	Tuerca exagonal M-6	Hexagonal nut M-6	2									
11	3715600	Tubo recogeaguas Ø26xØ18x800	Water collection tubing Ø26	1									
12	Q901311	Abrazadera elastica Ø26,7 - 28,1	Elastic clamp Ø26.7 - 28.1	2									
13	T302845	Junta recogeaguas	Water collector joint	1									
14	T302844	Desague recogeaguas	Water collection waste pipe	1									
	Q232030	Arandela plana A-5	Flat washer A-5	2									
	Q242030	Arandela abanico A-5	Fan shaped washer A-5	2									
	Q162030	Tuerca exagonal M-5	Hexagonal nut M-5	2									
15	T325066	Junta fijacion sonda	Probe clamping joint	1									
16	T115086	Tobera R.1/8'' (Ø1,5)	Nozzle R.1/8'' (Ø1.5)	1									
17	T325065	Fijacion sonda completa	Complete probe clamping	1									
	Q232030	Arandela plana A-5	Flat washer A-5	4									
	Q242030	Arandela abanico A-5	Fan shaped washer A-5	4									
	Q162030	Tuerca exagonal M-5	Hexagonal nut M-5	4									
18	3712400	Tubo-junta de silicona Ø8xØ3x20	Silicone tubing-joint Ø8xØ3	1									
19	R662629	Racord cierre sonda	Probe closing adaptor	1									

MOD.	HORNO ELECTRICO	ZONA	CONDUCCIONES AGUA,VAPOR Y DESAGUE	PLANO	C-1647

ITEM	CODIGO	DENOMINACION	TEXTO	HEM-10/21									NOTAS
20	T323007	Junta resistencia calderin	Drum resistor joint	3									
21	T323006	Resistencia 3x3000 W., 230 V.	Resistor 3x3000 W, 230 V	3									Generador
	Q232030	Arandela plana A-5	Flat washer A-5	18									
	Q242030	Arandela abanico A-5	Fan shaped washer A-5	18									
	Q163030	Tuerca exagonal M-5	Hexagonal nut M-5	18									
22	R665024	Tubo conduccion inyector	Injector conduction tubing	1									
23	R695003	Manguito cierre	Closing sleeve	1									
24	R695004	Bicono	Bicone	1									
25	-	Casquillo soldado a cuerpo horno	Bushing welded onto oven b	1									
26	Q306026	Arandela junta Ø14xØ8,5x1,5	Seal washer Ø14xØ8.5x1.5	1									
27	R695017	Tubo conduccion agua completo	Complete water conduction	1									
28	3676900	Tubo goma negra Ø17xØ10x900	Black rubber tubing Ø17xØ1	1									
29	Q901310	Abrazadera elastica Ø16,8 - 17,7	Elastic clamp Ø16.8 - 17.7	2									
30	R665041	Regulador caudal 0,25 l./min. (rosa)	Flow regulator 0.25 l/min (pi	1									
31	Z233012	Condensador antiparasitario	Antiparasistic condensor	1									
32	T323027	PTC Electrovalvula 5"	PTC Solenoide valve 5"	1									
33	Z701135	Electrovalvula entrada agua simple	Simple water inlet electrova	1									
34	T305063	Entrada agua completa	Complete water inlet	1									
	Q012021	Tornillo exagonal M-4x10	Hexagonal screw M-4x10	2									
35	Z701132	Filtro-junta entrada de agua	Filter-joint water inlet	1									
36	Z601114	Manguera entrada de agua	Water inlet hose	1									
37	Q307031	Junta manguera Ø24xØ14x3	Hose joint Ø24xØ14x3	1									
21	Z220901	Bomba desague 30 W. (50Hz.)	Pump waste pipe 30 W (50	1									
38	Z223501	Bomba desague 30 W. (60Hz.)	Pump waste pipe 30 W (60	1									
	Q012032	Tornillo exagonal M-5x15	Hexagonal screw M-5x15	2									
	Q242030	Arandela abanico A-5	Fan shaped washer A-5	2									
	Q232030	Arandela plana A-5	Flat washer A-5	2									
39	Q901311	Abrazadera elastica Ø26,7 - 28,1	Elastic clamp Ø26.7 - 28.1	2									
40	3715600	Tubo silicona Ø26xØ18x100	Silicone tubing Ø26xØ18x1(	1									

MOD.	HORNO ELECTRICO	ZONA	CONDUCCIONES AGUA,VAPOR Y DESAGUE	PLANO	C-1647

ITEM	CODIGO	DENOMINACION	TEXTO	HEM-10/21									NOTAS
41	P255001	Electrovalvula doble	Double solenoide valve	1									
42	P443042	Regulador caudal 3 l./min. (negro)	Flow regulator 3 l/min (black	1									
43	Z601156	Regulador caudal 8 l./min. (rojo)	Flow regulator 8 l/min (red)	1									
44	Z233012	Condensador antiparasitario	Antiparasistic condensor	2									
45	3676900	Tubo goma negra Ø17xØ10x400	Black rubber tubing Ø17xØ1	1									
46	Q901310	Abrazadera elastica Ø16,8 - 17,7	Elastic clamp Ø16.8 - 17.7	2									
47	Q901310	Abrazadera elastica Ø16,8 - 17,7	Elastic clamp Ø16.8 - 17.7	2									
48	3676900	Tubo goma negra Ø17xØ10x900	Black rubber tubing Ø17xØ1	1									
49	T325040	Cuerpo niveles completo	Complete levels body	1									
	Q232040	Arandela plana A-6	Flat washer A-6	1									
	Q262040	Arandela grower A-6	Grower washer A-6	1									
	Q162040	Tuerca exagonal M-6	Hexagonal nut M-6	1									
50	R345060	Electrodo nivel alto	High level electrode	1									
	R345063	Electrodo nivel bajo	Low level electrode	1									
	R345064	Electrodo de masa	Earth electrode	1									
51	R345059	Guia aislante de electrodos	Electrode insulator guide	3									
52	Q163020	Tuerca exagonal M-4	Hexagonal nut M-4	6									
53	R345058	Racord amarre electrodos	Electrodes anchoring adapto	3									
54	3715600	Tubo silicona Ø26xØ18x250	Silicone tubing Ø26xØ18x25	2									
55	Q901311	Abrazadera elastica Ø26,7 - 28,1	Elastic clamp Ø26.7 - 28.1	4									
56	T325000	Generador vapor completo	Complete steam generator	1	KIT COMPLETO		COMPLET KIT			1100003106			
	T325053	Aislante generador	Generator insulator	1									
57	R015011	Arandela junta Ø34x3	Joint washer Ø34x3	1									
58	R015010	Tuerca tapon 1"	Plug nut 1"	1									
59	3710900	Tubo silicona Ø51xØ43x100	Silcone tubing Ø51xØ43x10	1									
60	Q901312	Abrazadera elastica 50.6 - 53.2	Elasticic clamp 50.6 - 53.2	2									

N plano
C-1648

Firma

Fecha
5-2005

Aparato
HORNO ELECTRICO HEM-10/21

CIERRE CHIMENEA

Lamina
6

Fagor Industrial S.Coop.
Oñate

FAGOR

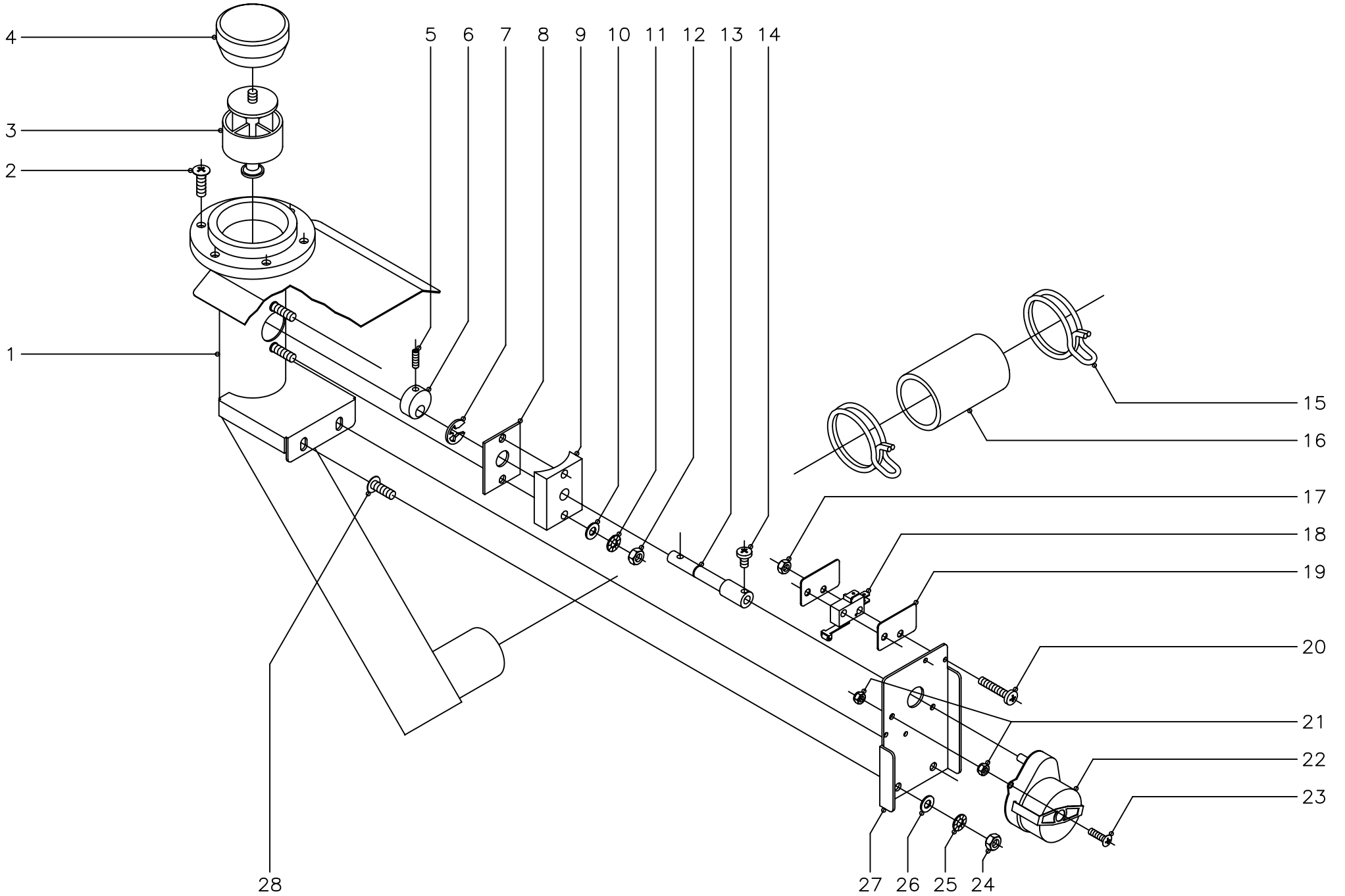

MOD.	HORNO ELECTRICO	ZONA	CIERRE CHIMENEA	PLANO	C-1648

ITEM	CODIGO	DENOMINACION	TEXTO	HEM-10/21									NOTAS
1	T325021	Conjunto chimenea	Chimney set	1									
2	Q152004	Tornillo aplastado M-5x13	Flat screw M-5x13	6									
3	T325051	Guia retencion vapores	Vapour retention guide	1									
4	T325055	Retencion de vapor	Retencion de vapor	1									
5	Q132045	Varilla roscada M-4x16	Threaded rod M-4x16	1									
6	T325032	Leva eje chimenea	Chimney shaft cam	1									
7	Q271006	Arandela de seguridad Ø8	Safety washer Ø8	1									
8	T325030	Junta eje chimenea	Chimney shaft joint	1									
9	T325029	Guia eje chimenea	Chimney shaft guide	1									
10	Q232030	Arandela plana A-5	Flat washer A-5	2									
11	Q242030	Arandela abanico A-5	Fan shaped washer A-5	2									
12	Q162030	Tuerca exagonal M-5	Hexagonal nut M-5	2									
13	T325031	Eje chimenea	Chimney shaft	1									
14	Q151320	Tornillo alomado M-4x6	Curved screw M-4x6	1									
15	Q901312	Abrazadera elastica 50.6 - 53.2	Elastic clamp 50.6 - 53.2	2									
16	3710900	Tubo silicona Ø51xØ43x100	Silcone tubing Ø51xØ43x10	1									
17	Q221350	Tuerca exagonal autoblocante M-3	Selfllocking hexagonal nut M	4									
18	R010534	Interruptor puerta	Door switch	2									
19	R010535	Placa separadora	Separating steel sheet	4									
20	Q032013	Tornillo alomado M-3x20	Curved screw M-3x20	4									
21	Q221350	Tuerca exagonal autoblocante M-3	Selfllocking hexagonal nut M	4									
22	T323010	Motor chimenea	Chimney motor	1									
23				0									
24	Q162030	Tuerca exagonal M-5	Hexagonal nut M-5	2									
25	Q242030	Arandela abanico A-5	Fan shaped washer A-5	2									
26	Q232030	Arandela plana A-5	Flat washer A-5	2									
27	T325033	Escuadra amarre motor	Motor anchoring bracket	1									
28	Q152004	Tornillo aplastado M-5x13	Flat screw M-5x13	2									

N plano	C-1649
Firma	
Fecha	5-2005
Aparato	HORNO ELECTRICO HEM-10/21
	PARTE ELECTRICA PORTAMANDOS
Lamina	7

Fagor Industrial S.Coop.
Oñate

FAGOR

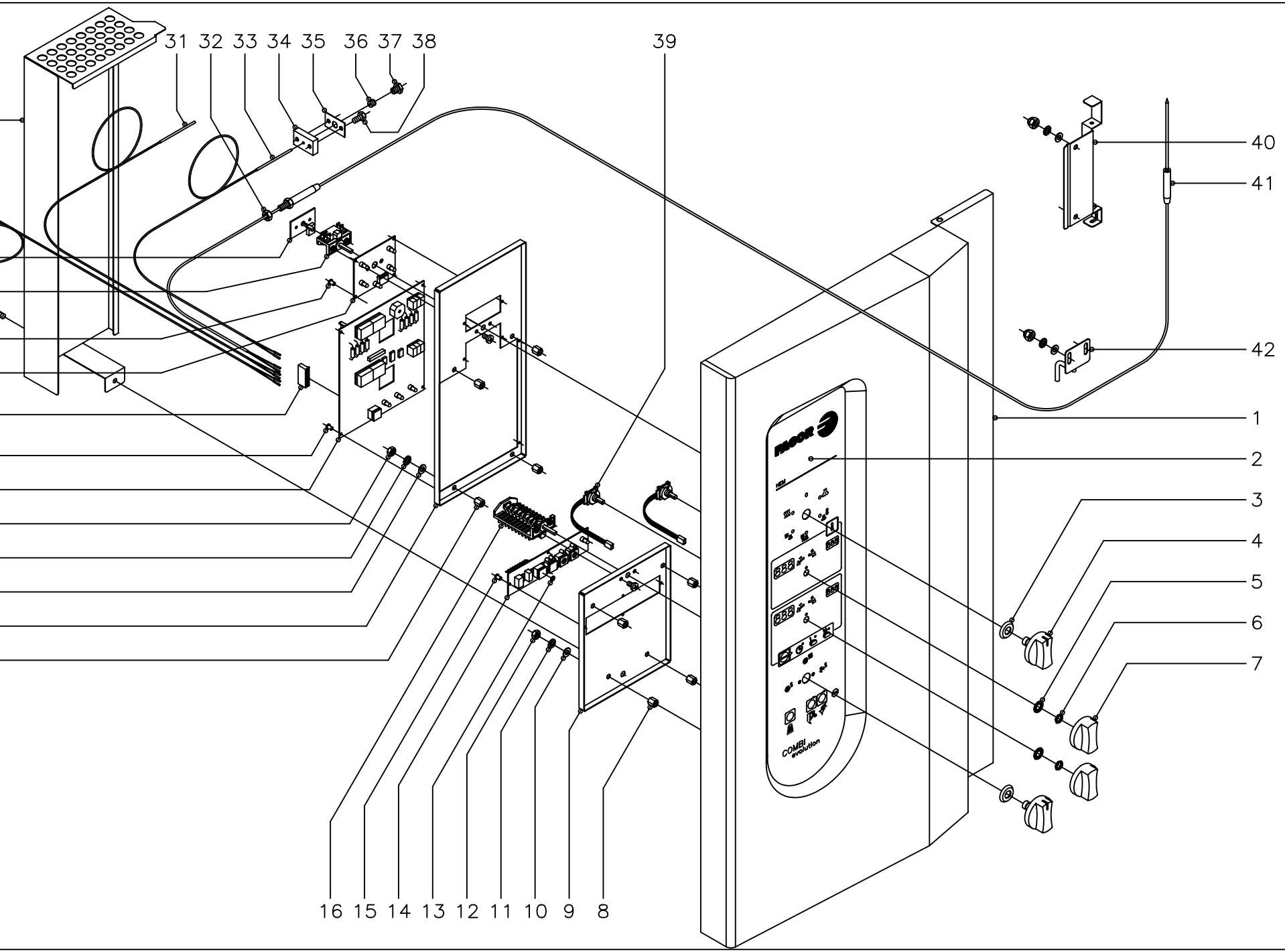

MOD.	HORNO ELECTRICO	ZONA	PARTE ELECTRICA PORTAMANDOS	PLANO	C-1649

ITEM	CODIGO	DENOMINACION	TEXTO	HEM-10/21									NOTAS
1	T322806	Panel portamandos	Control panel	1									
2	T323008	Serigrafia HEM-10 / 21	Serigraphy HEM-10 / 21	1									
3	R663046	Junta conmutador	Switch joint	2									
4	T303010	Boton de mando completo	Complete control button	2									
5	-	Arandela (viene con tuerca M-10)	Washer (comes with M-10 r	2									
6	Z953041	Tuerca exagonal M-10	Hexagonal nut M-10	2									
7	T303011	Boton de mando completo	Complete control button	2									
8	T302829	Distanciador componentes	Components spacer	4									
9	T303021	Soporte circuitos	Circuit holder	1									
10	Q232030	Arandela plana A-5	Flat washer A-5	4									
11	Q242030	Arandela abanico A-5	Fan shaped washer A-5	4									
12	Q163030	Tuerca exagonal M-5	Hexagonal nut M-5	4									
13	R663056	Bapipons autoadesivo	Self adhesive bupipons	3									
14	T303019	Circuito teclado	Key board circuit	1									
15	R663036	Fijacion circuito	Circuit bindings	4									
16	R663026	Conmutador de funciones	Function switch	1									
	Q151320	Tornillo alomado M-4x6	Curved screw M-4x6	2									
17	T302829	Distanciador componentes	Components spacer	4									
18	T302826	Soporte componentes	Components holder	1									
19	Q232030	Arandela plana A-5	Flat washer A-5	4									
20	Q242030	Arandela abanico A-5	Fan shaped washer A-5	4									
21	Q163030	Tuerca exagonal M-5	Hexagonal nut M-5	4									
22	T303005	Controlador	Controller	1									
23	R663036	Fijacion circuito	Circuit bindings	4									
24	T303045	Conector paso 3,96mm. 8 vias	Lead connector 3.96 mm 8	1									
25	T303018	Circuito de leds visualizador	Display leds circuit	1									
26	R663036	Fijacion circuito	Circuit bindings	4									
27	T303004	Conmutador acople potenciometro	Potentiometer coupling swit	1									
	Q151320	Tornillo alomado M-4x6	Curved screw M-4x6	2									

MOD.	HORNO ELECTRICO	ZONA	PARTE ELECTRICA PORTAMANDOS	PLANO	C-1649

ITEM	CODIGO	DENOMINACION	TEXTO	HEM-10/21									NOTAS
28	T303020	Circuito potenciometro	Potentiometer circuit	1									
29	T323024	Conjunto termopar vapor L=1600	Vapour thermocouple set G	1									Generador vapor
30	T303039	Proteccion circuitos	Circuit protection	1									
	Q152004	Tornillo aplastado M-5x13	Flat screw M-5x13	1									
31	T323024	Conjunto termopar vapor L=1600	Vapour thermocouple set G	1									Caja desague
32	Q162050	Tuerca exagonal M-8x1	Hexagonal nut M-8x1	1									
33	T323011	Conjunto termopar camara L=700	Chamber thermocouple set	1									Horno
34	T112625	Base cierre sonda (pasamuros)	Probe closing base (wire pr	1									
35	R692812	Junta pasamuros	Wire protection joint	1									
36	R662652	Bicono cierre sonda	Probe closing bicone	1									
37	R662629	Racord cierre sonda	Probe closing adaptor	1									
38	Q012021	Tornillo exagonal M-4x10	Hexagonal screw M-4x10	2									
39	T303022	Selector encoder	Encoder selector	2									
40	T302644	Soporte sonda	Probe holder	1									
	Q232030	Arandela plana A-5	Flat washer A-5	2									
	Q242030	Arandela abanico A-5	Fan shaped washer A-5	2									
	Q212031	Tuerca sombrerete M-5	Cowl nut M-5	2									
41	T303007	Conjunto sonda nucleo	Core probe set	1									
42	T302646	Tensor pincho completo	Complete spike tensor	1									
	Q232030	Arandela plana A-5	Flat washer A-5	2									
	Q242030	Arandela abanico A-5	Fan shaped washer A-5	2									
	Q212031	Tuerca sombrerete M-5	Cowl nut M-5	2									

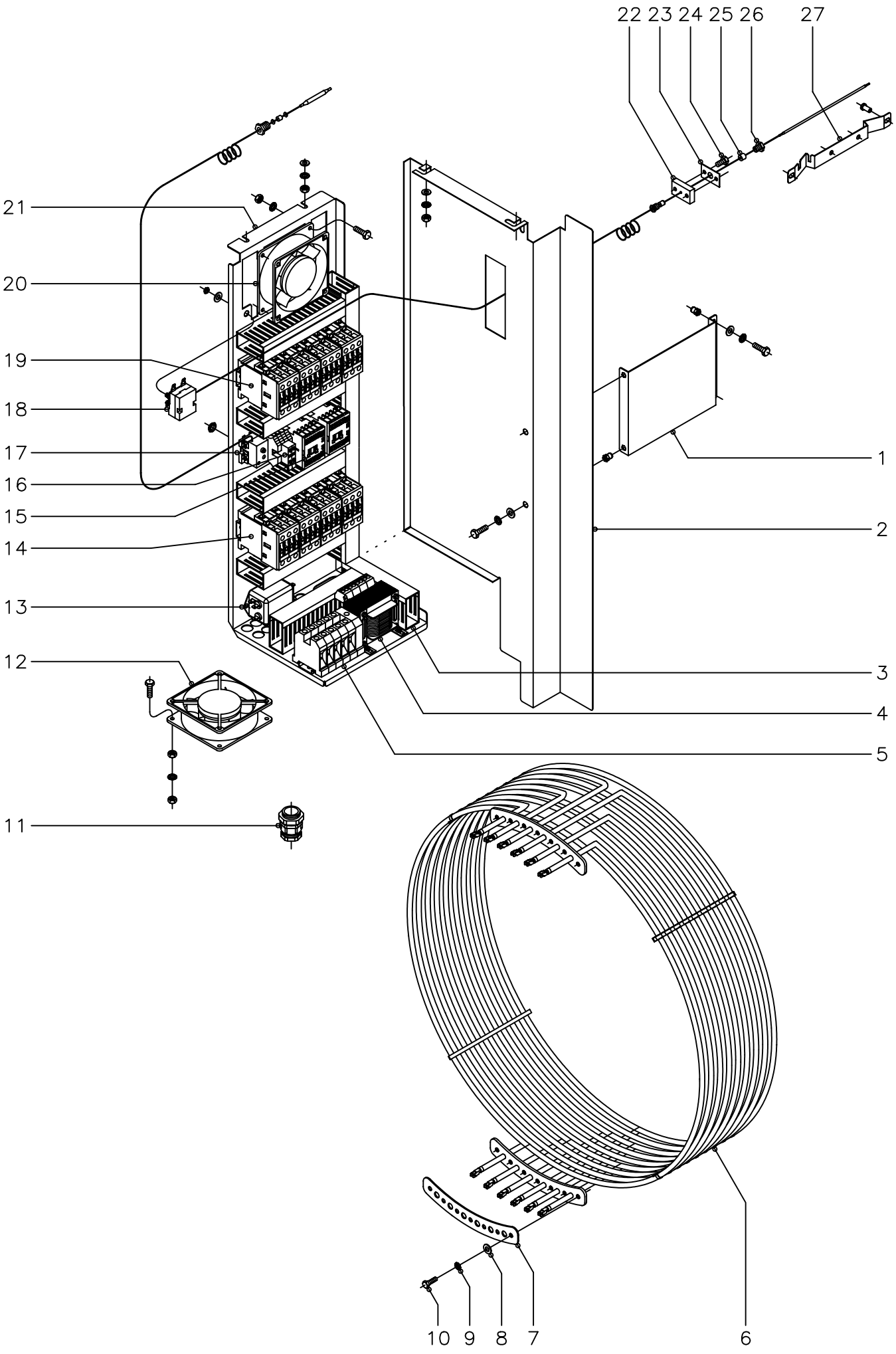

N plano	Firma	Fecha	Aparato	Lamina	
C−1650		5−2005	CUADRO ELECTRICO HORNO ELECTRICO HEM−10/21	8	Fagor Industrial S.Coop. Oñate

MOD.	HORNO ELECTRICO	ZONA	CUADRO ELECTRICO	PLANO	C-1650

ITEM	CODIGO	DENOMINACION	TEXTO	HEM-10/21									NOTAS
1	T303051	Soporte cierre cuadro electrico	Switchboard closing holder	1									
	Q012032	Tornillo exagonal M-5x15	Hexagonal screw M-5x15	2									
	Q242030	Arandela abanico A-5	Fan shaped washer A-5	2									
	Q302022	Arandela plana Ø16xØ6x1,2	Flat washer Ø16xØ6x1.2	2									
	Q221342	Remache exagonal M-5	Hexagonal rivet M-5	2									
2	T323003	Cierre cuadro electrico	Switchboard closing	1									
	Q012032	Tornillo exagonal M-5x15	Hexagonal screw M-5x15	2									Amarre cierre a soporte
	Q242030	Arandela abanico A-5	Fan shaped washer A-5	2									Amarre cierre a soporte
	Q302022	Arandela plana Ø16xØ6x1,2	Flat washer Ø16xØ6x1.2	2									Amarre cierre a soporte
	Q221342	Remache exagonal M-5	Hexagonal rivet M-5	2									Amarre cierre a soporte
	Q302022	Arandela plana Ø16xØ6x1,2	Flat washer Ø16xØ6x1.2	2									Amarre cierre a techo
	Q242030	Arandela abanico A-6	Fan shaped washer A-6	2									Amarre cierre a techo
	Q163040	Tuerca exagonal M-6	Hexagonal nut M-6	2									Amarre cierre a techo
3	3715520	Canaleta unex 30x60x150	Unex feed through 30x60x1	1									
	3715520	Canaleta unex 30x60x180	Unex feed through 30x60x1	5									
	3715520	Canaleta unex 30x60x510	Unex feed through 30x60x5	1									
	Q412002	Remache tubular Ø4x7,5	Tubular rivet Ø4x7.5	15									
4	R503005	Transformador	Transformer	1									
	Q032021	Tornillo alomado M-4x10	Curved screw M-4x10	4									
	Q242020	Arandela abanico A-4	Fan shaped washer A-4	4									
	Q162020	Tuerca exagonal M-4	Hexagonal nut M-4	4									
5	R263003	Borna paso 35 gris	connection paso 35 gris	3									
	R673010	Borna neutro 35 azul	Neutral terminal 35 blue	1									
	Z103035	Borna tierra 35 amarillo-verde	Earth terminal 35 yellow-gre	1									
	Z683096	Tope final 35	End buffer 35	1									
	Z403016	Guia contactor L=100	Contactor guide G=100	1									
6	T323000	Resistencia exterior 2500 W. X6	External resistor 2500 W.	1									
6	T323002	Resistencia interior 2500 W.X6	Internal resistor 2500 W.	1									
7	T323021	Junta resistencias	Resistor joint	4									

MOD.	HORNO ELECTRICO	ZONA	CUADRO ELECTRICO	PLANO	C-1650

ITEM	CODIGO	DENOMINACION	TEXTO	HEM-10/21									NOTAS
8	Q302022	Arandela plana Ø16xØ6x1,2	Flat washer Ø16xØ6x1.2	28									
9	Q242040	Arandela abanico A-6	Fan shaped washer A-6	28									
10	Q013042	Tornillo exagonal M-6x15 (laton)	Hexagonal screw M-6x15 (b	28									
11	R033002	Prensaestopas	Stuffing box	1									
12	Z103066	Ventilador 230V., 50/60 Hz.	Fan 230 V, 50/60 Hz	1									
	Q013023	Tornillo exagonal M-4x20	Hexagonal screw M-4x20	4									
	Q242020	Arandela abanico A-4	Fan shaped washer A-4	4									
	Q162020	Tuerca exagonal M-4	Hexagonal nut M-4	8									
13	T113023	Filtro de entrada	Inlet filter	1									
14	X183011	Contactor 3RT1024-1AN20	Contactor 3RT1024-1AN20	4									
	Z123019	Guia contactor L=175	Contactor guide G=175	1									
15	Z743009	Contactor sirius 3RT10, 16-2APO2	Sirius 3RT10, 16-2APO2 co	2									
16	R073005	Borna portafusible	Fuse carrier connection	2									
	P184011	Cartucho portafusible 4A.	Fuse holder cartridge 4A.	2									
	Z263303	Tope final 10	End buffer 10	2									
	Z103084	Guia contactor L=138	Contactor guide G=138	1									
	Q412002	Remache tubular Ø4x7,5	Tubular rivet Ø4x7.5	2									
17	Z953035	Termostato limitador aviso	Warning limiter thermostat	1									
	Z953041	Tuerca exagonal M-10x1	Hexagonal nut M-10x1	1									
18	T303009	Termostato limitador	Limiter thermostat	1									
	Q232050	Arandela plana A-8	Flat washer A-8	1									
	Q162050	Tuerca exagonal M-8	Hexagonal nut M-8	1									
19	X183011	Contactor 3RT1024-1AN20	Contactor 3RT1024-1AN20	4									
	Z123019	Guia contactor L=175	Contactor guide G=175	1									
20	Z103066	Ventilador 230V., 50/60 Hz.	Fan 230 V, 50/60 Hz	1									
	Q012021	Tornillo exagonal M-4x10	Hexagonal screw M-4x10	4									
	Q242020	Arandela abanico A-4	Fan shaped washer A-4	4									
	Q162020	Tuerca exagonal M-4	Hexagonal nut M-4	4									
21	T323004	Panel cuadro electrico	Switchboard panel	1									

MOD.	HORNO ELECTRICO	ZONA	CUADRO ELECTRICO	PLANO	C-1650

ITEM	CODIGO	DENOMINACION	TEXTO	HEM-10/21									NOTAS
	Q302022	Arandela plana Ø16xØ6x1,2	Flat washer Ø16xØ6x1.2	2									
	Q242030	Arandela abanico A-6	Fan shaped washer A-6	2									
	Q163040	Tuerca exagonal M-6	Hexagonal nut M-6	2									
22	T112625	Base cierre sonda (pasamuros)	Probe closing base (wire pr	1									
23	R692812	Junta pasamuros	Wire protection joint	1									
24	Q012021	Tornillo exagonal M-4x10	Hexagonal screw M-4x10	2									
25	R662662	Junta cierre bulbo limitador	Limiting bulb closing joint	1									
26	R662629	Racord cierre sonda	Probe closing adaptor	1									
27	R662683	Soporte bulbo limitador	Limiting bulb holder	1									
	Q412002	Remache tubular Ø4x7,5	Tubular rivet Ø4x7.5	3									

MOD.	HORNO ELECTRICO	ZONA	VARIOS	PLANO	

ITEM	CODIGO	DENOMINACION	TEXTO	HEM-10/21									NOTAS
	T326500	Manual de instrucciones	Instructions manual	1									Español
	T326501	Manual de instrucciones	Instructions manual	1									Aleman
	T326506	Manual de instrucciones	Instructions manual	1									Frances
	T326507	Manual de instrucciones	Instructions manual	1									Ingles
	T326508	Manual de instrucciones	Instructions manual	1									Italiano
	T323014	Esquema electrico adhesivo	Adhesive electrical diagram	1									Plano HC-76885
	T303042	Leyenda esquema electrico	Electrical diagram legend	1									Plano HC-76970
	T323020	Plano electrico de montaje	Assembly electrical diagram	1									Plano HD-12882
	T303053	Union contactores de inversion	Inversion contactors joint	1									
	T303030	Cableado control-potenciometro	Control-potentiometer wiring	1									
	T303031	Cableado luz interior	Inner light wiring	1									
	T303028	Cableado control circuito de leds	Leds circuit control wiring	1									
	T323019	Instalacion electrica HEM-10/21	Electrical installation HEM-1	1									
	T323016	Cableado resistencias camara	Chamber resistor wiring	1									
	T323018	Cableado fuerza	Force wiring	1									
	T323015	Instalacion doble potencia	Double power installation	1									
	T323017	Cableado resistencias vapor	Steam resistor wiring	1									

MOD.	HORNO ELECTRICO	ZONA	CAMBIOS PARA PASAR DE (380-415 V., 50Hz.) a (220 V., 50Hz.)	PLANO	C-1646

ITEM	CODIGO	DENOMINACION	TEXTO	HEM-10/21										NOTAS
		PIEZAS A ELIMINAR	**PARTS TO BE REMOVED**											
21	T323022	Motor de turbina 400 V.	Turbine motor 400 V	1										
	T326502	Etiqueta 380 - 415 V. 50 Hz.	Label 380 - 415 V 50 Hz	1										
		PIEZAS A INTRODUCIR	**PARTS TO BE INCLUDED**											
21	T323023	Motor de turbina 230 V.	Turbine motor 230 V	1										
	T326503	Etiqueta 220 V. 50 Hz.	Label 220 V 50 Hz	1										

MOD.	HORNO ELECTRICO	ZONA	CAMBIOS PARA PASAR DE (380-415 V., 50Hz.) a (220 V., 60Hz.)	PLANO	C-1645 46 y 47

ITEM	CODIGO	DENOMINACION	TEXTO	HEM-10/21									NOTAS
		PIEZAS A ELIMINAR	**PARTS TO BE REMOVED**										
21	T323022	Motor de turbina 400 V.	Turbine motor 400 V	1									C-1646
38	Z220901	Bomba desague 30 W. (50Hz.)	Pump waste pipe 30 W (50	1									C-1647
	T326502	Etiqueta 380 - 415 V. 50 Hz.	Label 380 - 415 V 50 Hz	1									
		PIEZAS A INTRODUCIR	**PARTS TO BE INCLUDED**										
	T302666	Reduccion cubreventilador 60 Hz.	Fan cover reduction 60 Hz	1						(C-1645) Entre piezas item.:13 y 17			
21	T323023	Motor de turbina 230 V.	Turbine motor 230 V	1									C-1646
38	Z223501	Bomba desague 30 W. (60Hz.)	Pump waste pipe 30 W (60	1									C-1647
	T326505	Etiqueta 220 V. 60 Hz.	Label 220 V 60 Hz	1									

MOD.	HORNO ELECTRICO	ZONA	CAMBIOS PARA PASAR DE (380-415 V., 50Hz.) a (380-415 V., 60Hz.)	PLANO	C-1645 C-1647

ITEM	CODIGO	DENOMINACION	TEXTO	HEM-10/21									NOTAS
		PIEZAS A ELIMINAR	**PARTS TO BE REMOVED**										
38	Z220901	Bomba desague 30 W. (50Hz.)	Pump waste pipe 30 W (50	1									C-1647
	T326502	Etiqueta 380 - 415 V. 50 Hz.	Label 380 - 415 V 50 Hz	1									
		PIEZAS A INTRODUCIR	**PARTS TO BE INCLUDED**										
	T302666	Reduccion cubreventilador 60 Hz.	Fan cover reduction 60 Hz	1						(C-1645) Entre piezas item.:13 y 17			
38	Z223501	Bomba desague 30 W. (60Hz.)	Pump waste pipe 30 W (60	1									C-1647
	T326504	Etiqueta 380 - 415 V. 60 Hz.	Label 380 - 415 V 60 Hz	1									

MOD.	HORNO ELECTRICO	ZONA	CAMBIOS A REALIZAR PARA LA VERSION VAUBAN	PLANO	C-1643

ITEM	CODIGO	DENOMINACION	TEXTO	HEM-10/21	VECM-10/21								NOTAS
		PIEZAS A ELIMINAR	**PARTS TO BE REMOVED**										
25	T323008	Serigrafia HEM-10 / 21	Serigraphy HEM-10 / 21	1	-								
	T326500	Manual de instrucciones	Instructions manual	1	-								Español
	T326501	Manual de instrucciones	Instructions manual	1	-								Aleman
	T326506	Manual de instrucciones	Instructions manual	1	-								Frances
	T326507	Manual de instrucciones	Instructions manual	1	-								Ingles
	T326508	Manual de instrucciones	Instructions manual	1	-								Italiano
		PIEZAS A INTRODUCIR	**PARTS TO BE INCLUDED**										
25	T323025	Serigrafia VAUBAN (VECM)	Serigraphy VAUBAN (VECM	-	1								
	T326510	Manual de instrucciones (VECM)	Instructions manual (VECM	-	1								

HEM 10 / 11 HEM 10 / 21
HEP 10 / 11 HEP 10 / 21

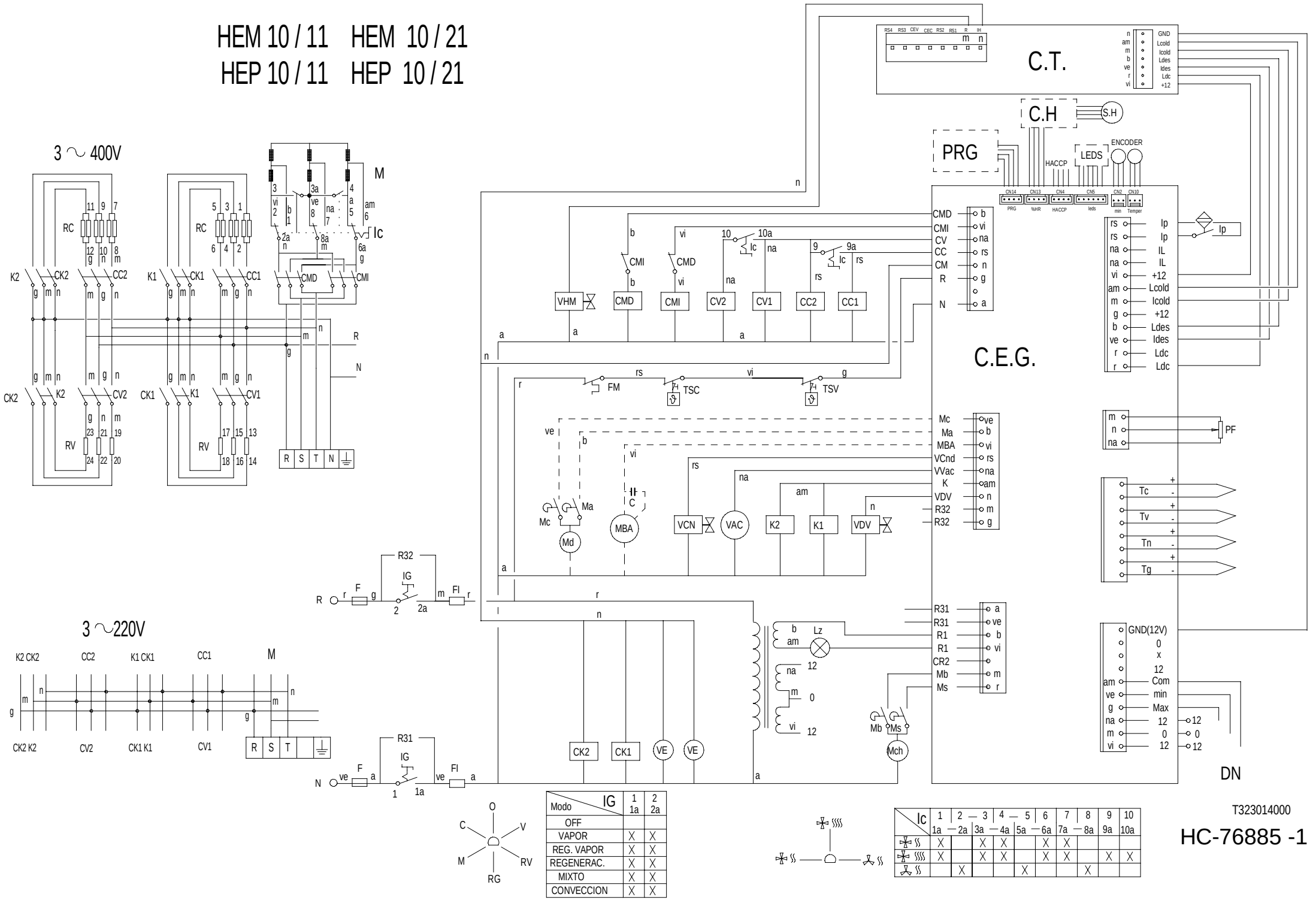

Modo \ IG	1 1a	2 2a
OFF		
VAPOR	X	X
REG. VAPOR	X	X
REGENERAC.	X	X
MIXTO	X	X
CONVECCION	X	X

Ic	1 1a	2 — 3 2a 3a	4 — 5 4a 5a	6 6a	7 — 8 7a 8a	9 9a	10 10a
	X		X	X		X	X			
	X		X	X		X	X		X	X
		X			X			X		

	ESPAÑOL	FRANÇAIS	ENGLISH	DEUTSCH	ITALIANO
BEC =	Bujía Encendido Cámara	Bougie Allumage Chambre	Chamber Spark Plug	Zündkerze Einschalten Garraum	Candela di Accensione Camera
BEV =	Bujía Encendido Caldera	Bougie Allumage Chaudière	Boiler Spark Plug	Zündkerze Einschalten Boile	Candela di Accensione Caldaia
C.E.C =	Control Combustión Cámara	Contrôle Combustion Chambre	Chamber Combustion Control	Steuerung Verbrennung Garraum	Controllo Combustione Camera
C.E.G =	Control Electrónico General	Contrôle Électronique Général	Main Electronic Control	Steuerung Elektronik allgemein	Controllo Elettronico Generale
C.E.V =	Control Combustión Caldera	Contrôle Combustion Chaudière	Boiler Combustion Control	Steuerung Verbrennung Boiler	Controllo Combustione Caldaia
C.H =	Circuito Humedad	Circuit Humidité	Humidity Circuit	Kreislauf Feuchtigkeit	Circuito Umidità
C.L =	Circuito Leds	Circuit LEDs	Led Circuit	Kreislauf LEDs	Circuito Leds
C.T =	Circuito Teclado	Circuit Clavier	Keypad Circuit	Kreislauf Tastatur	Cicuito Tastiera
CC1,CC2 =	Contactor Resistencia Cámara	Contacteur Élément Chauffant Chambre	Chamber Heating Element Contactor	Schütz Heizwiderstand Garraum	Contattore Resistenza Camera
CMD =	Contactor Motor Derecha	Contacteur Moteur Droite	Right Engine Contactor	Schütz Motor rechts	Contattore Motore Destra
CMI =	Contactor Motor Izquierda	Contacteur Moteur Gauche	Left Engine Contactor	Schütz Motor links	Contattore Motore Sinistra
CR2 =	Rele Arranque	Relais Démarrage	Starting Relay	Relais Anlauf	Relè Accensione
CV1, CV2 =	Contactor Resistencias Caldera	Contacteur Élément Chauffant Chaudière	Boiler Heating Element Contactor	Schütz Heizwiderstand Boiler	Contattore Resistenza Caldaia
DEC =	Detector Llama Cámara	Détecteur Flamme Chambre	Chamber Flame Detector	Flammendetektor Garraum	Rilevatore di Fiamma Camera
DEV =	Detector Llama Caldera	Détecteur Flamme Chaudière	Boiler Flame Detector	Flammendetektor Boiler	Rilevatore di Fiamma Caldaia
DN =	Detector Nivel Caldera	Détecteur Niveau Chaudière	Boiler Level Detector	Pegeldetektor Boiler	Rilevatore Livello Caldaia
EM =	Encoder Selector Tiempo	Encodeur Sélecteur Temps	Time Selector Encoder	Encoder Zeitwahlschalter	Encoder Selettore Tempo
EºC =	Encoder Selector Temperatura	Encodeur Sélecteur Température	Temperature Selector Encoder	Encoder Temperaturwahlschalter	Encoder Selettore Temperatura
F =	Fusibles	Fusibles	Fuses	Sicherungen	Fusibili
FI =	Filtro Interferencias	Filtre Interférences	Interference Filter	Störungsfilter	Filtro Interferenze
FM =	Térmico Motor	Thermique Moteur	Thermal Engine	Thermoschalter Motor	Termico Motore
GV1, GV2 =	Electro válvula Gas Cámara	Électrovanne Gaz Chambre	Chamber Gas Solenoid Valve	Elektroventil Gas Garraum	Elettrovalvola Gas Camera
GV3, GV4 =	Electro válvula Gas Caldera	Électrovanne Gaz Chaudière	Boiler Gas Solenoid Valve	Elektroventil Gas Boiler	Elettrovalvola Gas Caldaia
IC =	Selector Velocidad Potencia	Sélecteur Vitesse Puissance	Power Speed Selector	Wahlschalter Geschwindigkeit Leistung	Selettore Velocità Potenza
IG =	Interruptor General	Interrupteur Général	Main Switch	Hauptschalter	Interruttore generale
IL =	Interruptor Seguridad Lavado	Interrupteur Sécurité Lavage	Washing Safety Switch	Sicherheitsschalter Waschen	Iterruttore Sicurezza Lavaggio
Ip =	Interruptor Seguridad Puerta	Interrupteur Sécurité Porte	Door Safety Switch	Sicherheitsschalter Tür	Iterruttore Sicurezza Porta
K1,K2,CK1,CK2=	Rele Resistencia	Relais Élément Chauffant	Heating Element Relay	Relais Heizwiderstand	Relè Resistenza
Lz =	Luz Interior	Éclairage Intérieur	Inner Light	Innenbeleuchtung	Luce Interna
M, M1, M2 =	Motor Turbina	Moteur Turbine	Turbine Engine	Motor Turbine	Motore Turbina
Mch =	Motor Chimenea	Moteur Cheminée	Stack Engine	Motor Abluftkamin	Motore Canna
Md =	Motor Válvula	Moteur vanne	Valve Engine	Motor Ventil	Motore Valvola
MBA =	Bomba Lavado	Pompe Lavage	Washing Pump	Waschenpumpe	Pompa lavaggio
Mb =	Interruptor Micro Bajada	Microrupteur Descente	Drop Microswitch	Mikroschalter Senken	Iterruttore Micro Discesa
Ms =	Interruptor Micro Subida	Microrupteur Montée	Rise Microswitch	Mikroschalter Heben	Iterruttore Micro Salita
PF =	Potenciómetro Selector Funciones	Potentiomètre Sélecteur Fonctions	Functions Selector Potentiometer	Potentiometer Funktionswahlschalter	Potenziometro Selettore Funzioni
PRG =	Programador	Programmateur	Programmer	Programmiervorrichtung	Programmatore
RC =	Resistencias Cámara	Éléments Chauffants Chambre	Chamber Heating Element	Heizwiderstände Garraum	Resistenze Camere
RV =	Resistencias Caldera	Éléments Chauffants Chaudière	Boiler Heating Element	Heizwiderstände Boiler	Resistenze Caldaia
Tc =	Sonda Cámara	Sonde Chambre	Chamber Probe	Sonde Garraum	Sonda Camera
TCN =	Termostato Condensación	Thermostat Condensation	Condensation Thermostat	Thermostat Kondensierung	Termostato Condensazione
Tg =	Sonda Caldera	Sonde Chaudière	Boiler Probe	Sonde Boiler	Sonda Caldaia
TH =	Sonda Humedad	Sonde Humidité	Humidity Probe	Sonde Feuchtigkeit	Sonda Umidità
Tn =	Sonda Núcleo	Sonde Noyau	Core Probe	Kerntemperaturmessonde	Sonda Nucleo
TRF =	Transformador	Transformateur	Transformer	Transformator	Trasformatore
TSC =	Termostato Seguridad Cámara	Thermostat Sécurité Chambre	Chamber Safety Thermostat	Sicherheitsthermostat Garraum	Termostato Sicurezza Camera
TSV =	Termostato Seguridad Caldera	Thermostat Sécurité Chaudière	Boiler Safety Thermostat	Sicherheitsthermostat Boiler	Termostato Sicurezza Caldaia
Tv =	Sonda Vapor	Sonde Vapeur	Steam Probe	Sonde Dampf	Sonda Vapore
VAC =	Bomba Vaciado	Pompe Vidange	Vacuum Pump	Ablasspumpe	Pompa scarico
VAcl =	Electro válvula Aclarado	Électrovanne Rinçage	Rinsing Solenoid Valve	Elektroventil Klarspülen	Elettrovalvola Risciacquo
VC =	Ventilador Soplante	Ventilateur Soufflant	Blowing Fan	Ventilator Gebläse	Ventilatore Soffiante
VCN =	Electro válvula Condensación	Électrovanne Condensation	Condensation Solenoid Valve	Elektroventil Kondensierung	Elettrovalvola Condensazione
VDV =	Electro válvula Llenado Caldera	Électrovanne Remplissage Chaudière	Chamber Filling Solenoid Valve	Elektroventil Füllung Boiler	Elettrovalvola di Riempimento Caldaia
VE =	Ventilador Cuadro Eléctrico	Ventilateur Tableau Électrique	Fan Switchboard	Ventilator Elektrotafel	Ventilatore Quadro Elettrico
VHM =	Electro válvula Humidificador	Électrovanne Humidificateur	Humidifier Solenoid Valve	Elektroventil Befeuchtungsvorrichtung	Elettrovalvola Umidificatore
VLav =	Electro válvula Lavado	Électrovanne Lavage	Washing Solenoid Valve	Elektroventil Waschen	Elettrovalvola Lavaggio
Vv =	Variador Velocidad	Variateur Vitesse	Speed Variator	Geschwindigkeitsregler	Variatore di Velocità
COLOR	COLORES	COULEURS	COLOUR	FARBEN	COLORE
Va =	Azul	Bleu	Blue	Blau	Blu
am =	Amarillo	Jaune	Yellow	Gelb	Giallo
am/ve =	Amarillo/verde	Jaune / vert	Yellow / green	Gelb/grün	Giallo/verde
b =	Blanco	Blanc	White	Weiß	Bianco
g =	Gris	Gris	Grey	Grau	Grigio
m =	Marrón	Marron	Brown	Braun	Marrone
n =	Negro	Noir	Black	Schwarz	Nero
na =	Naranja	Orange	Orange	Orange	Arancio
r =	Rojo	Rouge	Red	Rot	Rosso
rs =	Rosa	Rose	Pink	Rosa	Roseo
ve =	Verde	Vert	Green	Grün	Verde
vi =	Violeta	Violet	Purple	Violett	Viola

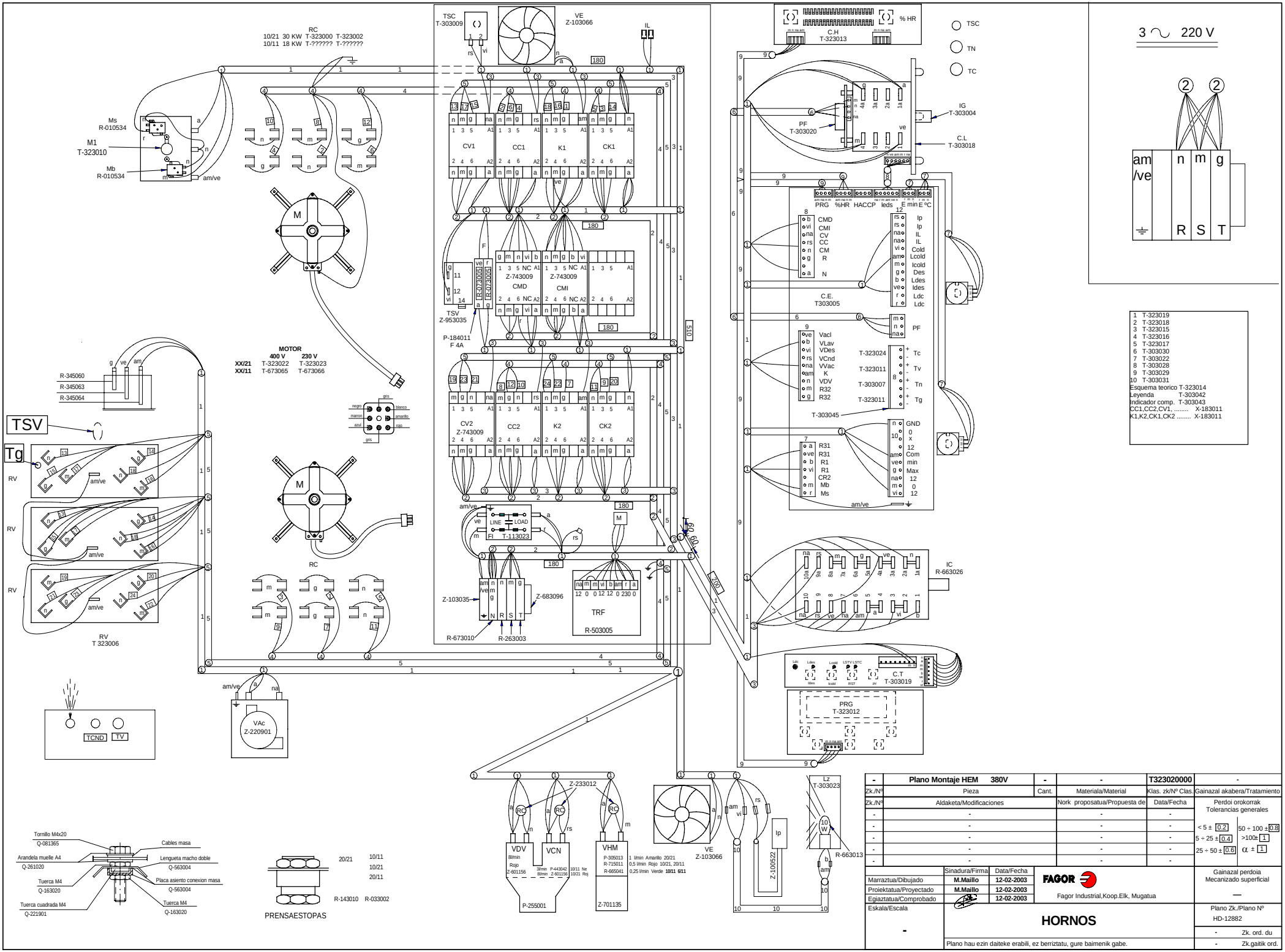

1	T-323019
2	T-323018
3	T-323015
4	T-323016
5	T-323017
6	T-303030
7	T-303022
8	T-303028
9	T-303029
10	T-303031

Esquema teorico T-323014
Leyenda T-303042
Indicador comp. T-303043
CC1,CC2,CV1, ... X-183011
K1,K2,CK1,CK2 ..... X-183011

-	Plano Montaje HEM 380V	-	-	T323020000	-
Zk./Nº	Pieza	Cant.	Materiala/Material	Klas. zk/Nº Clas.	Gainazal akabera/Tratamiento
Zk./Nº	Aldaketa/Modificaciones		Nork proposatua/Propuesta de	Data/Fecha	Perdoi orokorrak Tolerancias generales
-	-		-	-	
-	-		-	-	< 5 ± 0.2 50 ÷ 100 ± 0.8
-	-		-	-	5 ÷ 25 ± 0.4 >100± 1
-	-		-	-	25 ÷ 50 ± 0.6 α ± 1
-	-		-	-	

	Sinadura/Firma	Data/Fecha
Marraztua/Dibujado	M.Maillo	12-02-2003
Proiektatua/Proyectado	M.Maillo	12-02-2003
Egiaztatua/Comprobado		12-02-2003
Eskala/Escala	-	

FAGOR
Fagor Industrial,Koop.Elk, Mugatua

Gainazal perdoia
Mecanizado superficial
—

HORNOS

Plano Zk./Plano Nº
HD-12882

Plano hau ezin daiteke erabili, ez berriztatu, gure baimenik gabe.

- Zk. ord. du
- Zk.gaitik ord.