DESPIECE TECNICO / SPARE PARTS BOM

Hornos a gas
Fours à gaz
Gas ovens
Gas heissluftdämpfer
Forni a gas
Fornos a gás

Modelos / Models:

AG-202
ACG-202
APG-202

Septiembre 2012 September
Revisado Julio 2015 July Revised

FAGOR

FAGOR INDUSTRIAL

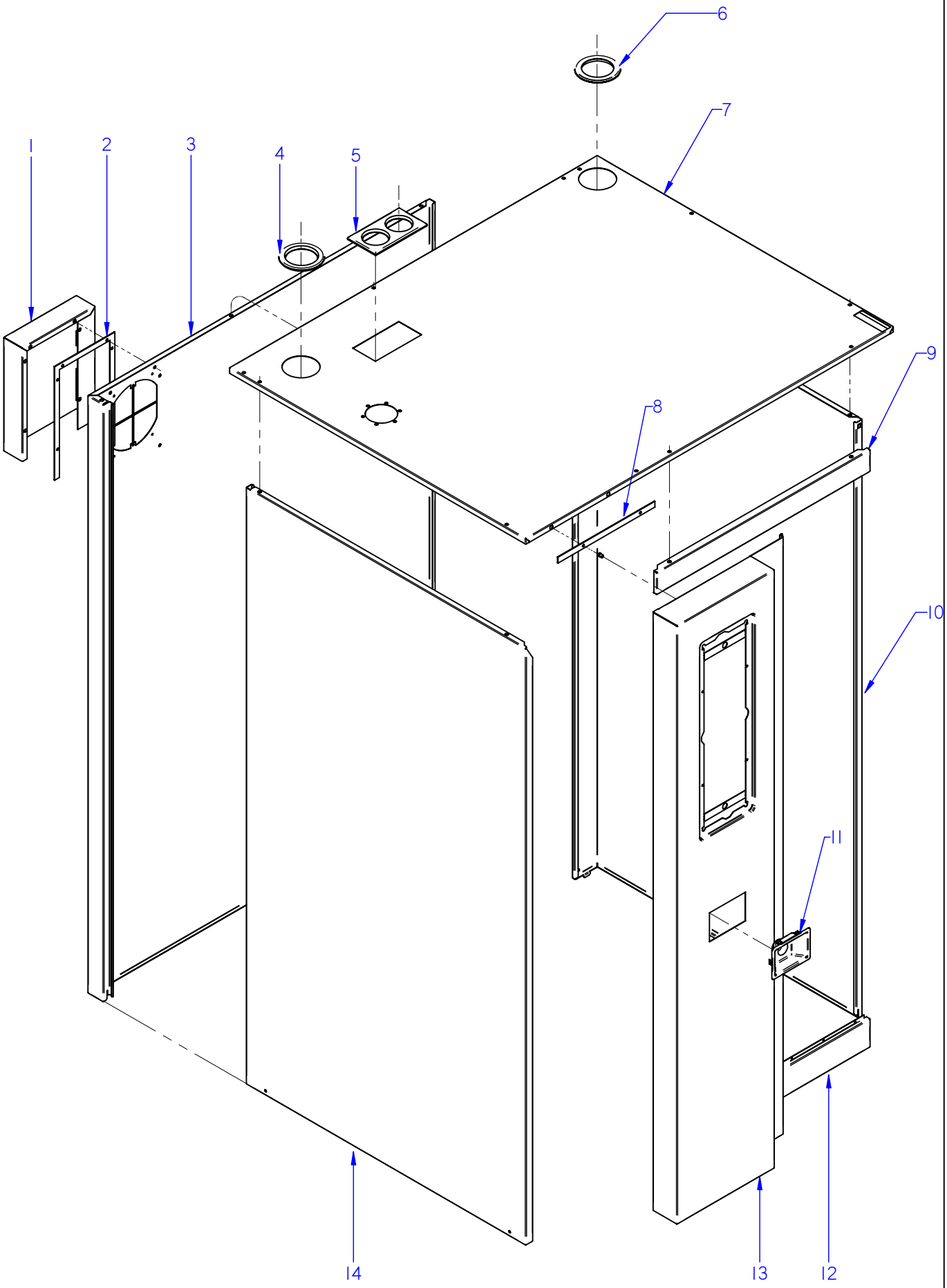

ITEM MARCADO EN COLOR = REPUESTO RECOMENDADO
COLOURED ITEM = RECOMMENDED SPARE PART

Nº plano / N º plane	Firma	Fecha / Date	Denominación / Denomination: MUEBLE / UNIT	Lamina / Sheet	
C-3086		2012-09	HORNOS AG; ACG; APG-202	1	Fagor Industrial S.Coop. FAGOR Oñate

MOD.	HORNOS / OVEN	ZONA / ZONE	MUEBLE / UNIT	PLANO DIAGRAM	C-3086

ITEM	CODIGO REFERENCE	DENOMINACION	DENOMINATION	ACG-202	AG-202	APG-202						ELIMINADO ELIMINATED	INTRODUCID. INTRODUCED	NOTAS
1	12022556	CHAPA SEPARACION IPX5 20-21	SEPARATION PLATE IPX5 20-21	1	1	1						01.11.12		
1	12022557	CHAPA SEPARACI. IPX5 20 SOLD.	SEPARAT. PLATE IPX5 20 WEL.	1	1	1							01.11.12	
	12010163	REMACHE EXAGONAL M.5	HEXAGONAL RIVET M.5	12	12	12								
2	12024081	JUNTA IPX5 20-21	SEAL IPX5 20-21	1	1	1								
	12009944	ARANDELA A5	FLAT WASHER A.5	6	6	6								
	12009890	ARANDELA ABANICO A5 A.304	FAN SHAPED WASHER A.5	6	6	6								
	12010238	TORNILLO EXAGONAL M5X10	HEXAGONAL BOLT M5X10	6	6	6								
3	12039348	PANEL POSTERIOR 202	REAR PANEL 202	1	1	1								
4	12039366	PASAMUROS Ø 73	Ø 73 BUSHING	1	1	1								
5	12039365	PASAMUROS RECTANGULAR Ø60	RECTANGLE BUSHING Ø60	1	1	1								
S/Nº	12039334	BRIDA SUPER INTERCAMBIAD 202	202 EXCHANGER FLANGE UPP.	1	1	1								
6	12039366	PASAMUROS Ø 73	Ø 73 BUSHING	1	1	1								
7	12044372	PANEL SUPERIOR SOL. ACG 202	TOP PANEL ACG 202 SOLDIER	1	_	_								
7	12043255	PANEL SUPERIOR SOL. APG 202	TOP PANEL APG 202 SOLDIER	_	1	1								
8	12039370	JUNTA PORTAMANDOS 202	CONTROL PANEL SEAL 202	1	1	1						28.03.14		
9	12039353	PANEL FRONTAL SUPERIOR 202	UPPER FRONT PANEL 202	1	1	1								
	12010163	REMACHE EXAGONAL M.5	HEXAGONAL RIVET M.5	2	2	2								
	12010065	REMACHE AVINOX Ø3.2X6MM	AVINOX Ø3.2X6MM RIVET	7	7	7								
10	12039347	PANEL EXTERIOR DCHO 202	RIGHT PANEL 202	1	1	1								
11	12041736	EMBELLECEDOR DUCHA AD	SHOWER TRIM AD	1	1	1						28.03.14		
12	12039344	PANEL FRONTAL INFERIOR 202	LOWER FRONT PANEL 202	1	1	1								
	12010065	REMACHE AVINOX Ø3.2X6MM	AVINOX Ø3.2X6MM RIVET	7	7	7								
13	12043633	PANEL PORTAMANDOS CAE 202	CONTROL PANEL CAE 202	1	_	_						01.10.13		
13	12039418	PORTAMANDOS APG 202	CONTROL PANEL APG 202	1	_	_						02.10.13	01.10.13	
13	12095165	PANEL PORTAMANDOS AC 202	CONTROL PANEL AC 202	1	_	_						28.03.14	02.10.13	
13	12097897	MOD PORTAMANDO 202 ACE	CONTROL PANEL 202 ACE	1	_	_							28.03.14	
13	12043551	PANEL PORTAMANDOS AE 202	CONTROL PANEL AE 202	_	1	_						01.10.13	28.03.14	
13	12039418	PORTAMANDOS APG 202	CONTROL PANEL APG 202	_	1	_						28.03.14	01.10.13	
13	12039418	PORTAMANDOS APG 202	CONTROL PANEL APG 202	_	_	1						28.03.14		
13	12097624	MOD PORTAMANDO 202 ADV PL.	CONTROL PANEL 202 ADV PLUS	_	1	1							28.03.14	
14	12039364	PANEL EXT. IZQUIERDO 202 ADV	REAR LEFT PANEL 202 ADV	1	1	1								

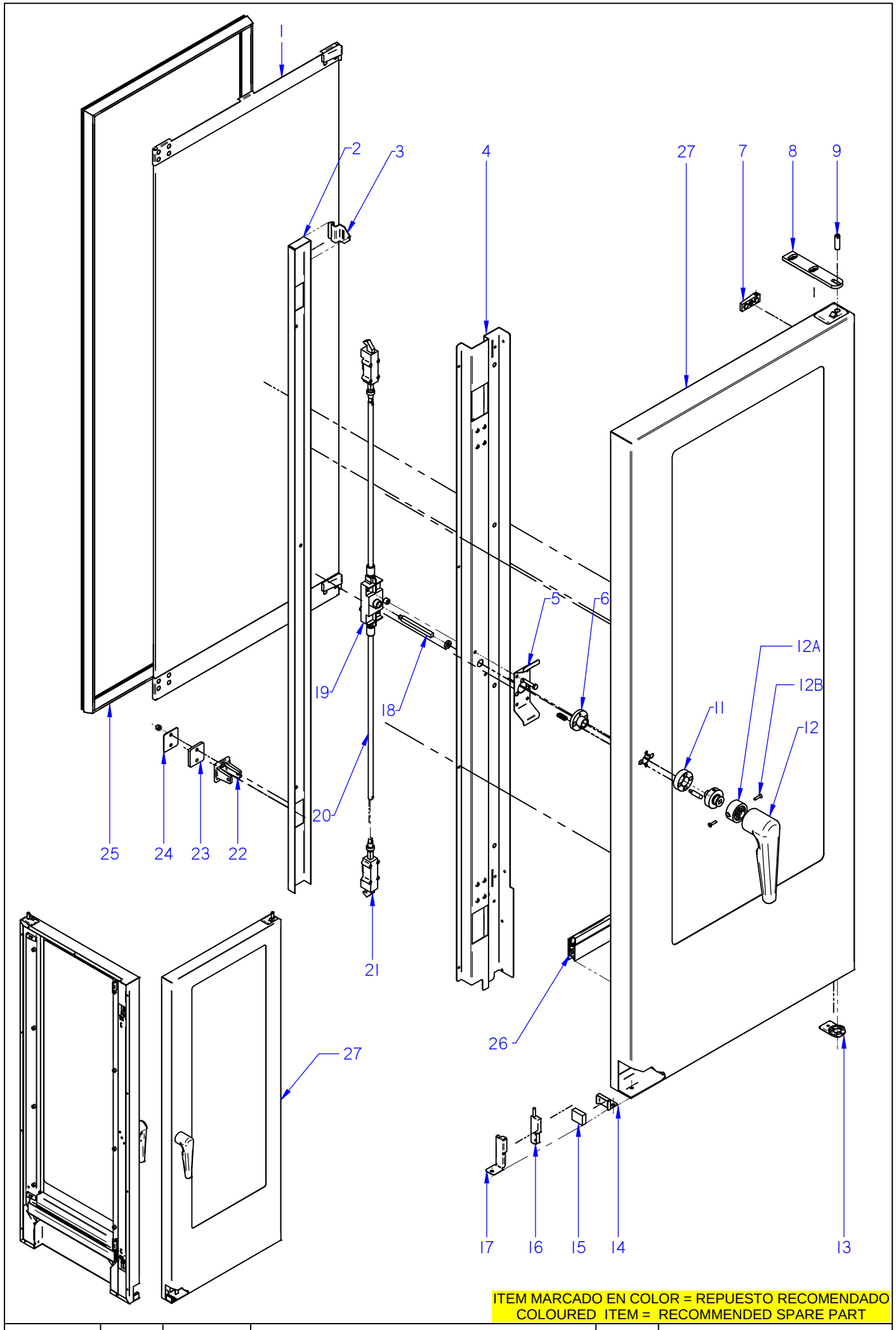

ITEM MARCADO EN COLOR = REPUESTO RECOMENDADO
COLOURED ITEM = RECOMMENDED SPARE PART

Nº plano / N º plane	Firma	Fecha / Date	Denominación / Denomination: PUERTA / DOOR	Lamina / Sheet	
C-3087		2012-09	HORNOS AG; ACG; APG-202	2	Fagor Industrial S.Coop. FAGOR Oñate

MOD.	HORNOS / OVEN	ZONA / ZONE	PUERTA (HASTA 06-2014) / DOOR (UNTIL 06-2014)	PLANO DIAGRAM	C-3087

ITEM	CODIGO REFERENCE	DENOMINACION	DENOMINATION	ACG-202	AG-202	APG-202						ELIMINADO ELIMINATED	INTRODUCID. INTRODUCED	NOTAS
1	**12039272**	**KIT CRISTAL INTER. 202**	**202 INNER GLASS KIT**	**1**	**1**	**1**								
2	12039324	TAPA CIERRE PUERTA 202	DOOR CLOSING COVER 202	1	1	1								
	12010226	TORNILLO ALOMADO.M5X10	CURVED SCREW .M5X10	2	2	2								
	12010278	TORNILLO ALOMADO M4X10	CURVED SCREW M.4x10	2	2	2								
3	12024319	PESTILLO	INNER GLASS HINGE	2	2	2								
4	12039302	CONTRAPUERTA MANILLA 202	COMPLETE HANDLE DOOR 202	1	1	1								
5	12039326	SUPLEMENTO SUJ. CERRADURA	LOCK FIXING SUPPLEMENT	1	1	1								
6	12024389	GUIA MANILLA	HANDLE GUIDE	1	1	1								
	12023608	PITON ENGANCHE PUERTA	DOOR FASTENER SPIKE	2	2	2								
7	12024402	BASE DE BISAGRA	HINGE BASE	2	2	2								
	12010209	TORNILLO AVELLANADO M5X15	COUNTERSUNK SCREW M.5x15	2	2	2								
8	12039312	BISAGRA SUPERIOR	UPPER HINGE	1	1	1								
	12009882	ARANDELA ABANICO A6 A.304	FAN SHAPED WASHER A.6	3	3	3								
	12010106	TORNILLO ALLEN INOX. M6X35MM	ALLEN BOLT STAINLE.M6X35MM	3	3	3								
9	12023636	EJE SUPERIOR	UPPER SHAFT	1	1	1								
	12023631	ARANDELA AMARRE	DOOR ANCHORING WASHER	1	1	1								
	12023716	RESORTE 06329	SPRING 06329	1	1	1								
	12009882	ARANDELA ABANICO A6 A.304	FAN SHAPED WASHER A.6	1	1	1								
	12010186	TORNILLO EXAGONAL M6X15 A304	HEXAGONAL SCREW M6X15	1	1	1								
11	12024505	SOPORTE RESORTE	SPRING HOLDER	1	1	1								
	12024164	RESORTE 34548	SPRING	2	2	2								
	12010213	TORNILLO ALOMADO M5x15	CURVED SCREW M.5x15	2	2	2								
12A	12102288	INSERTO AMARRE	FASTENING INSERT	1	1	1							09,06,15	
12B	12010262	TORNILLO AVELLANADO M4X15	COUNTERSUNK SCREW M4x15	2	2	2							09,06,15	
12	12044776	ASA COMPLETA 2/1 ADVANCE	HANDLE 2/1 ADVANCE	1	1	1								
	12010236	VARILLA ROSCADA M6X15	THREADED ROD M.6x15	1	1	1								
13	12039311	BASE BISAGRA INFERIOR PUERTA	LOWER DOOR HINGE BASE	1	1	1						02.09.13		
13	12047967	BASE BISAGRA INFERIOR 6 DIEN	LOWER HINGE BASE	1	1	1							02.09.13	
	12009944	ARANDELA A5	FLAT WASHER A.5	1	1	1								
14	12022049	SOPORTE IMAN	MAGNET HOLDER	1	1	1								
	12009970	REMACHE EXAGONAL M.5	HEXAGONAL RIVET M.5	1	1	1								

MOD.	HORNOS / OVEN	ZONA / ZONE	PUERTA (HASTA 06-2014) / DOOR (UNTIL 06-2014)	PLANO DIAGRAM	C-3087

ITEM	CODIGO REFERENCE	DENOMINACION	DENOMINATION	ACG-202	AG-202	APG-202						ELIMINADO ELIMINATED	INTRODUCID. INTRODUCED	NOTAS
	12010213	TORNILLO ALOMADO M5X10	CURVED SCREW M5X10	1	1	1								
15	12024384	IMAN	MAGNET	1	1	1								
	12009890	ARANDELA ABANICO A5 A.304	FAN SHAPED WASHER A.5	1	1	1								
	12010242	TORNIL. APLASTADO M5X13 A 304	FLAT SCREW M.5x13	1	1	1								
16	12024560	INTERRUPTOR MAGNETICO AC	MAGNETIC SWITCH AC	1	1	1								
17	12022166	SOPORTE MICRO PUERTA	DOOR MICRO SWITCH	1	1	1								
	12010242	TORNIL. APLASTADO M5X13 A 304	FLAT SCREW M.5x13	1	1	1								
18	12024799	EJE DE MANILLA PUERTA	LEVER SHAFT	1	1	1								
	12024245	CASQUILLO	BUSHING	1	1	1								
19	12024673	MECANISMO CIERRE	CLOSING MECHANISM	1	1	1								
S/Nº	12010292	PASADOR DE ALETAS 2X20	COTTER PIN 2x15	4	4	4								
	12009882	ARANDELA ABANICO A6 A.304	FAN SHAPED WASHER A.6	2	2	2								
	12010255	TORNILLO EXAGONAL M6 INOX.	HEXAGONAL SCREW M6 INOX.	2	2	2								
	12023506	CASQUILLO AMARRE TECLADO	COLLAR	2	2	2								
20	12039308	TUBO ALARGADERA 201/202 ADV	ROD 201/202 ADV	2	2	2								
21	12024657	ELEMENTO CIERRE	CLOSING COMPONENT	2	2	2								
	12009890	ARANDELA ABANICO A5 A.304	FAN SHAPED WASHER A.5	8	8	8								
	12010284	TORNILLO EXAGONAL M5 INOX.	HEXAGONAL SCREW M5 INOX.	8	8	8								
22	12024495	ENGANCHE PUERTA	FASTENER	2	2	2								
23	12024380	SUPLEMENTO ENGANCHE	FASTENER SUPPLEMENT	2	2	2								
24	12022138	CALZO DE ENGANCHE	COUPLING CHOCK	4	4	4								
25	12039298	JUNTA PUERTA 202	DOOR JOINT 202	1	1	1								
26	12039307	JUNTA CIERRE INFERIOR 202	LOWER LOCK JOINT 202	1	1	1								
27	**12046024**	**KIT PUERTA 202**	**DOOR 202 KIT**	**1**	**1**	**1**								

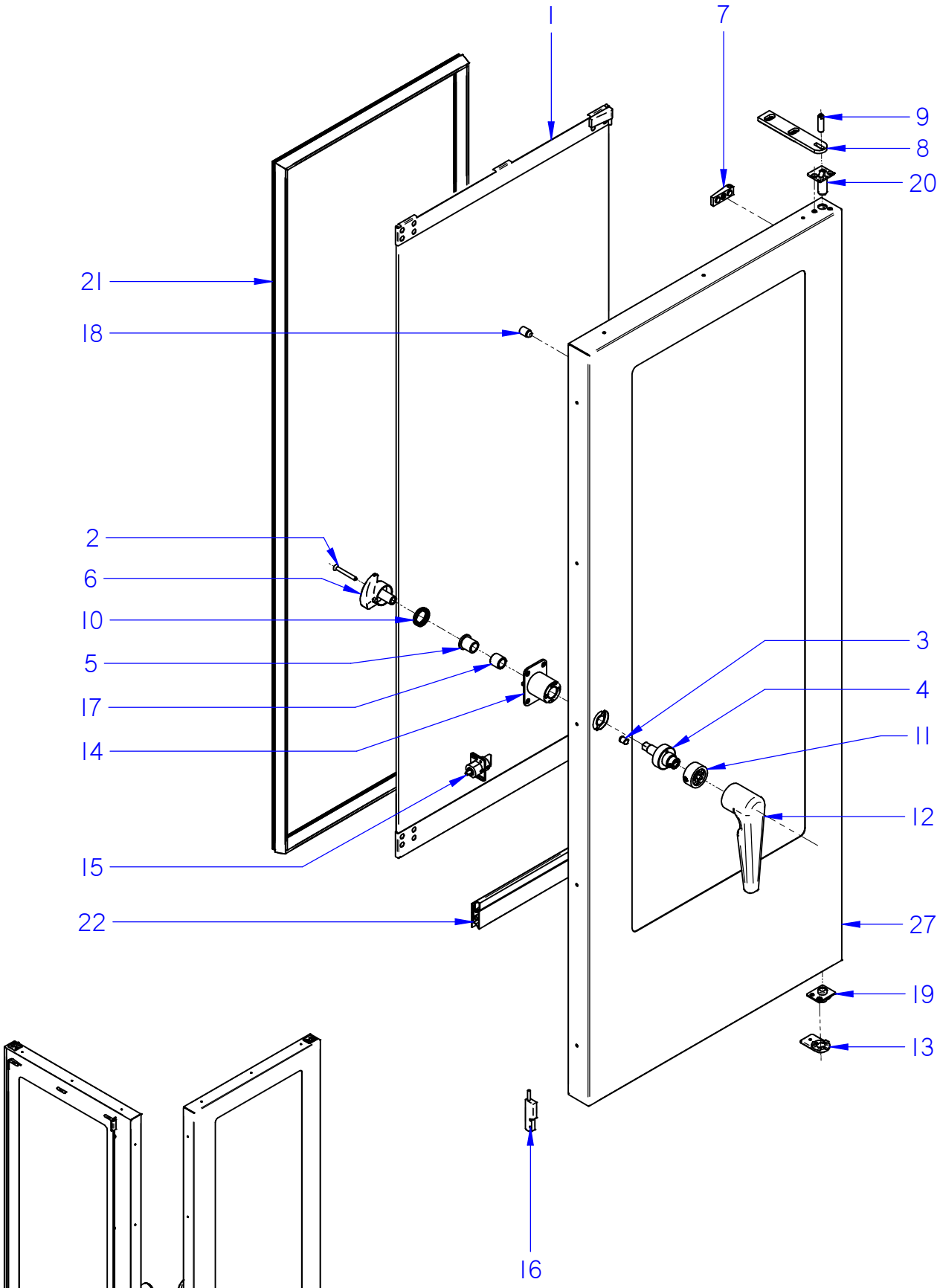

ITEM MARCADO EN COLOR = REPUESTO RECOMENDADO
COLOURED ITEM = RECOMMENDED SPARE PART

Nº plano / Drawing N.	Firma / Signature	Fecha / Date	Denominación / Denomination: PUERTA / DOOR	Lamina / Sheet	
C-3087-14	Iban R.	2014-06	HORNOS AG; ACG; APG-202	2-14	Fagor Industrial S.Coop. Oñate FAGOR

MOD.	HORNOS / OVEN	ZONA / ZONE	PUERTA (DESDE 06-2014) / DOOR (FROM 06-2014)	PLANO DIAGRAM	C-3087-14

ITEM	CODIGO REFERENCE	DENOMINACION	DENOMINATION	ACG-202	AG-202	APG-202						ELIMINADO ELIMINATED	INTRODUCID. INTRODUCED	NOTAS / NOTES
1	**12039272**	**KIT CRISTAL INTER. 202**	**202 INNER GLASS KIT**	**1**	**1**	**1**								
2	12097552	TORNILLO AVELLANADO M6x50	COUNTERSAUNK SCREW M6x50	1	1	1							12,03,14	
3	12049719	POSICIONADOR DE BOLA MUELLE	BALL-SPRING FIXER	1	1	1							12,03,14	
4	12049683	INSERTO ASA 20X CIERRE UNICO	HANDLE INSERT 20X SING. LOCK	1	1	1							12,03,14	
5	12025100	CASQUILLO SELFOIL 16-22-25	SELFOIL BUSHING 16-22-25	1	1	1							12,03,14	
6	12049692	LEVA CIERRE UNICO 20X ADV	SINGLE LOCK CAM 20X ADV	1	1	1							12,03,14	
7	12024402	BASE DE BISAGRA	HINGE BASE	2	2	2								
8	12039312	BISAGRA SUPERIOR	UPPER HINGE	1	1	1								
9	12023636	EJE SUPERIOR	UPPER SHAFT	1	1	1								
10	12093685	MUELLE LEVA PUERTA ADVANCE	CAM SPRING ADVANCE DOOR	1	1	1							12,03,14	
11	12102288	INSERTO AMARRE ADV 202	FASTENING INSERT ADV 202	1	1	1							12,03,14	
12	12044773	ASA ADVANCE	ADVANCE HANDLE	1	1	1							12,03,14	
13	12047967	BASE BISAGRA INFERIOR 6 DIEN	LOWER HINGE BASE	1	1	1								
14	12049691	SOPORTE MANILLA 20X	20X HANDLE SUPPORT	1	1	1							12,03,14	
15	12113376	MOD PITON PUERTA	DOOR BOLT MODULE	1	1	1							12,03,14	
16	12024560	INTERRUPTOR MAGNETICO AC	MAGNETIC SWITCH AC	1	1	1								
17	12097533	CASQUILLO SELFOIL TIPOA 16-22-20	SELFOIL BUSHING 16-22-20	1	1	1							12,03,14	
18	12024794	TOPE CRISTAL INTERIOR	INNER GLASS BLOCK	9	9	9								
19	12049660	BISAGRA INF. 202 ADV 6 DIENTES	LOWER HINGE 202 ADV. 6 TEETH	1	1	1								
20	12049282	BISAGRA SUP. 202 TOPE ALTO	TOP HINGE 202	1	1	1								
21	12039298	JUNTA PUERTA COMPL.202 ADV	DOOR JOINT 202 ADV	1	1	1								
22	12039307	JUNTA CIERRE INFERIOR 202	LOWER LOCK JOINT 202	1	1	1								
23	**12094579**	**KIT PUERTA 202 CIERRE UNICO**	**SINGLE LOCK DOOR 202 KIT**	**1**	**1**	**1**								

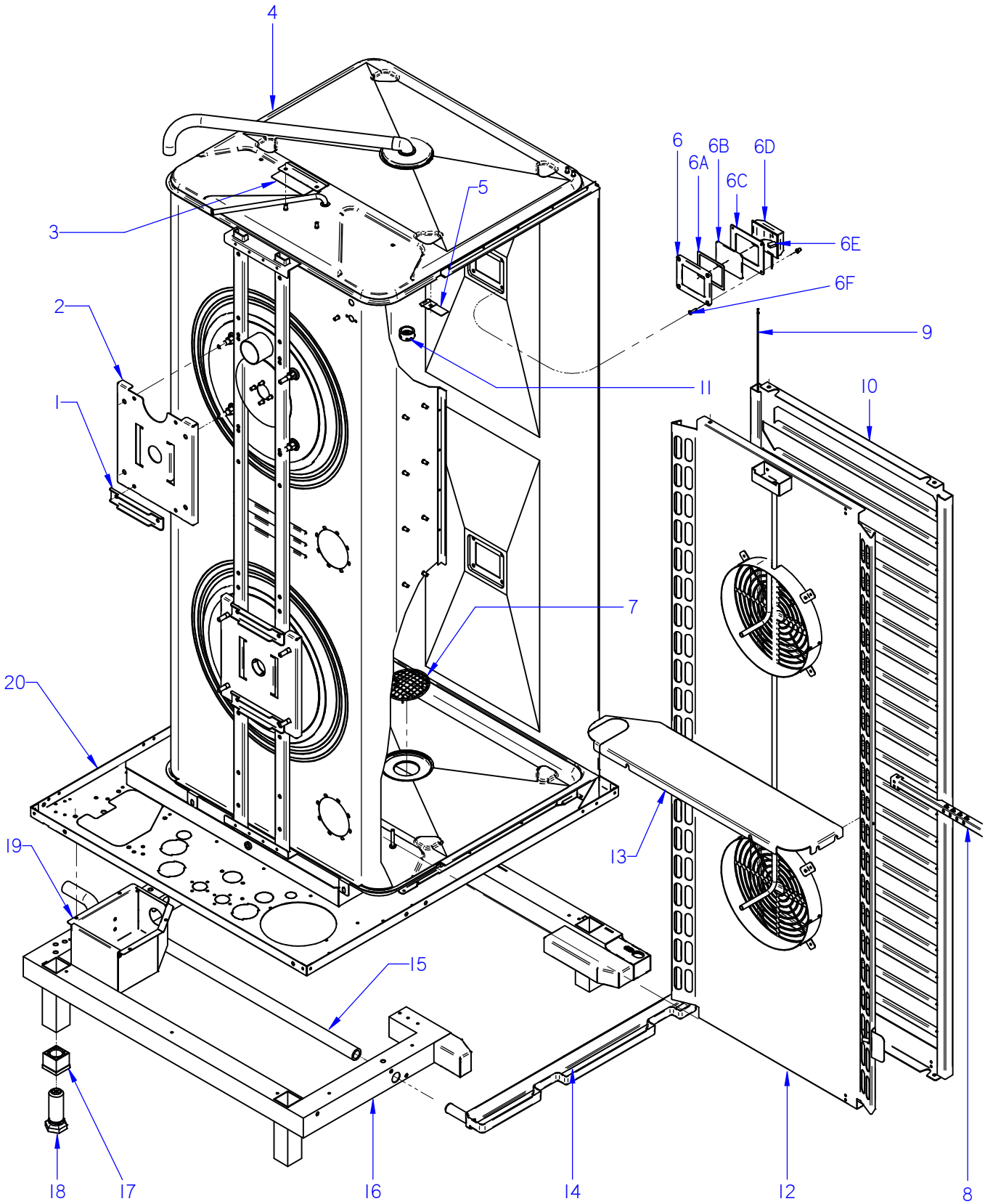

ITEM MARCADO EN COLOR = REPUESTO RECOMENDADO
COLOURED ITEM = RECOMMENDED SPARE PART

Nº plano / N º plane	Firma	Fecha / Date	Denominación / Denomination: MUEBLE INTERIOR / INTERIOR OVEN	Lamina / Sheet	
C-3088	Iban R.	03-2015	HORNOS AG; ACG; APG-202	3	Fagor Industrial S.Coop. Oñate FAGOR

MOD.	HORNOS / OVEN	ZONA / ZONE	MUEBLE INTERIOR / INTERIOR OVEN	PLANO DIAGRAM	C-3088

ITEM	CODIGO REFERENCE	DENOMINACION	DENOMINATION	ACG-202	AG-202	APG-202						ELIMINADO ELIMINATED	INTRODUCID. INTRODUCED	NOTAS
1	12022413	REFUERZO MOTOR 10/21	MOTOR REINFORCEMENT 10/21	3	3	3								
	12009944	ARANDELA A5	FLAT WASHER A.5	8	8	8								
	12009890	ARANDELA ABANICO A5 A.304	FAN SHAPED WASHER A.5	8	8	8								
	12010221	TORNILLO EXAGONAL M5X15	HEXAGONAL BOLT M5X15	8	8	8								
2	12022599	SOPORTE MOTOR	SOPORTE MOTOR	2	2	2								
3	12039529	SOPORTE LIMITADOR CAMARA	LIMITER BRACKET CAMERA	1	1	1								
	12009868	ARANDELA PLANA INOX 6MM	WASHER FLAT 6 MM INOX.	2	2	2								
	12009882	ARANDELA ABANICO A6 A.304	FAN SHAPED WASHER A.6	2	2	2								
	12010255	TORNILLO EXAGONAL M6 INOX.	HEXAGONAL SCREW M6 INOX.	2	2	2								
4	12044355	CUERPO INT. COMPL. ACG 202	INTERIOR FULL BODY ACG 202	1	_	_								
4	12044343	CUERPO INT. COMPL. AG 202	INTERIOR FULL BODY AG 202	_	1	_								
4	12039415	CUERPO INT. COMPL. APG 202	INTERIOR FULL BODY APG 202	_	_	1								
5	12041767	SOPORTE SONDA PINCHO CAMARA	CAMERA PROBE SUPP. PINCHO	1	1	1						14,02,13		
	12009890	ARANDELA ABANICO A5 A.304	FAN SHAPED WASHER A.5	1	1	1						14,02,13		
	12010284	TORNILLO EXAGONAL M5 INOX.	HEXAGONAL SCREW M5 INOX.	1	1	1						14,02,13		
	12010090	REMACHE AVINOX Ø4X7,5MM	AVINOX RIVET Ø4X7,5MM	1	1	1						14,02,13		
6	12024464	MARCO LAMPARA	LAMP ANCHORING PLATEN	2	2	2								
6A	12023532	JUNTA INTERIOR LAMPARA	LAMP INNER JOINT	2	2	2								
6B	12023668	CRISTAL LAMPARA	LAMP GLASS	2	2	2								
6C	12023578	JUNTA EXTERIOR LAMPARA	LAMP OUTER JOINT	2	2	2								
6D	12024545	PORTALAMPARAS	LAMP HOLDER	2	2	2								
6E	12025123	LAMPARA 10W-12V	LIGHT 10W 12V	2	2	2								
6F	12010262	TORNILLO AVELLANADO M4X15	COUNTERSUNK SCREW M.4x15	8	8	8								

MOD.	HORNOS / OVEN	ZONA / ZONE	MUEBLE INTERIOR / INTERIOR OVEN	PLANO DIAGRAM	C-3088

ITEM	CODIGO REFERENCE	DENOMINACION	DENOMINATION	ACG-202	AG-202	APG-202						ELIMINADO ELIMINATED	INTRODUCID. INTRODUCED	NOTAS
7	12024458	FILTRO DESAGÜE Ø70 20/21	DRAINAGE FILTER Ø70 20/21	1	1	1						15.09.13		
7	12095053	FILTRO DESAGÜE Ø73	DRAINAGE FILTER Ø73	1	1	1							15.09.13	
8	**12126827**	**SOPORTE CORE HOLDER**	**CORE HOLDER SUPPORT**	**1**	**1**	**1**								
9	12039490	TOPE BANDEJAS 101-102	TRAY TOP 101-102	4	_	_								
10	**12126826**	**PORTABANDEJAS ACG 202 IZDA**	**ACG 202 HOLDER LEFT**	**1**	_	_								
10	**12126824**	**PORTABANDEJAS ACG 202 DCHA**	**ACG 202 HOLDER RIGHT**	**1**	_	_								
11	12023935	PUNTA DIFUSORA LAVADO	WASHING DISPENSER POINT	_	_	1								
12	**12126839**	**CUBREVENTILADOR 202**	**FAN COVER 202**	**1**	**1**	**1**								
13	12039335	CHAPA REFUERZO CUBA AG 202	CUBA REINFOR. PLATE AG 202	1	1	1								
	12009868	ARANDELA PLANA INOX 6MM	WASHER FLAT 6 MM INOX.	7	7	7								
	12010255	TORNILLO EXAGONAL M6 INOX.	HEXAGONAL SCREW M6 INOX.	7	7	7								
14	12039363	RECOGEAGUAS HORNO 202	SPRING WATER COLLE. 202	1	_	_								
15	12039498	TUBO RECOGEAGUAS 101	COLLECT WATER PIPE 101	1	_	_						01.02.13		
15	12048417	TUBO RECOGEAGUAS 202	COLLECT WATER PIPE 202	1	_	_							01.02.13	
	12009628	ABRAZADERA ELAST. 26.7-28.1	SPRING CLAMP 26.7-28.1	2	_	_								
16	12044249	REFUERZO BASE COM. ACE 202	FULL BASE REINFORC. ACE 202	1	_	_								
16	12039351	REFUERZO BASE COM. 202	FULL BASE REINFORC. 202	_	1	1								
	12010163	REMACHE EXAGONAL M.5	HEXAGONAL RIVET M.5	16	16	16								
	12010090	REMACHE AVINOX Ø4X7,5 MM	AVINOX Ø4X7,5 MM RIVET	16	16	16								
17	12043392	TUERCA PATA 202 ADVANCE	NUT LEG 202 ADVANCE	4	4	4								
18	12043393	TORNILLO PATA 202 ADVANCE	SCREW LEG 202 ADVANCE	4	4	4								
19	12004867	CAJA CUBREBOMB. LAVADO X02	PUMP CASE COVER X02	_	_	1								
	12010090	REMACHE AVINOX Ø4X7,5 MM	AVINOX Ø4X7,5 MM RIVET	_	_	4								
20	12039339	BASE EXTERIOR 202 ADV	EXTERI. BASE 202 ADV	1	1	1								

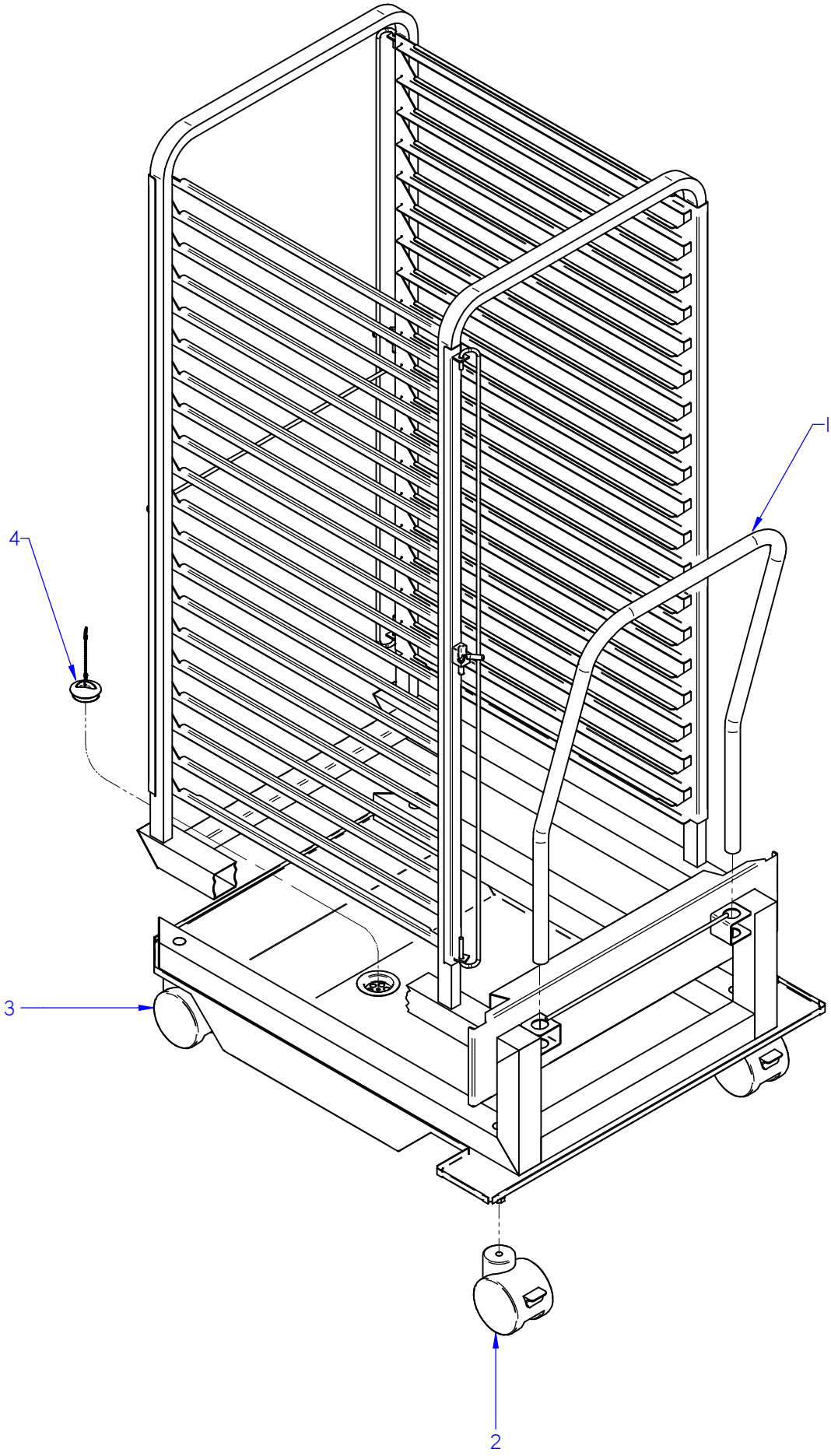

ITEM MARCADO EN COLOR = REPUESTO RECOMENDADO
COLOURED ITEM = RECOMMENDED SPARE PART

Nº plano / N º plane	Firma	Fecha / Date	Denominación / Denomination: CARRO / TROLLEY	Lamina / Sheet	
C-3089		2012-09	HORNOS AG; APG-202	4	Fagor Industrial S.Coop. FAGOR Oñate

MOD.	HORNOS / OVEN	ZONA / ZONE	CARRO / TROLLEY	PLANO DIAGRAM	C-3089

ITEM	CODIGO REFERENCE	DENOMINACION	DENOMINATION	AG-202	APG-202							ELIMINADO ELIMINATED	INTRODUCID. INTRODUCED	NOTAS
	12044215	**CARRO 202 ADVANCE**	**TROLLEY 202 ADVANCE**	**1**	**1**									
1	12044227	ASA COMPLETA CARRO 202 ADV	HANDLE FULL 202 ADV	1	1									
2	12045349	RUEDA GIRATORIA CON FRENO	SWIVEL WHEEL WITH BRAKE	2	2									
3	12045315	RUEDA GIRATORIA SIN FRENO	SWIVEL WHEEL WITHOUT BR.	2	2									
4	12024275	TAPON Ø44	CAP Ø44	1	1									

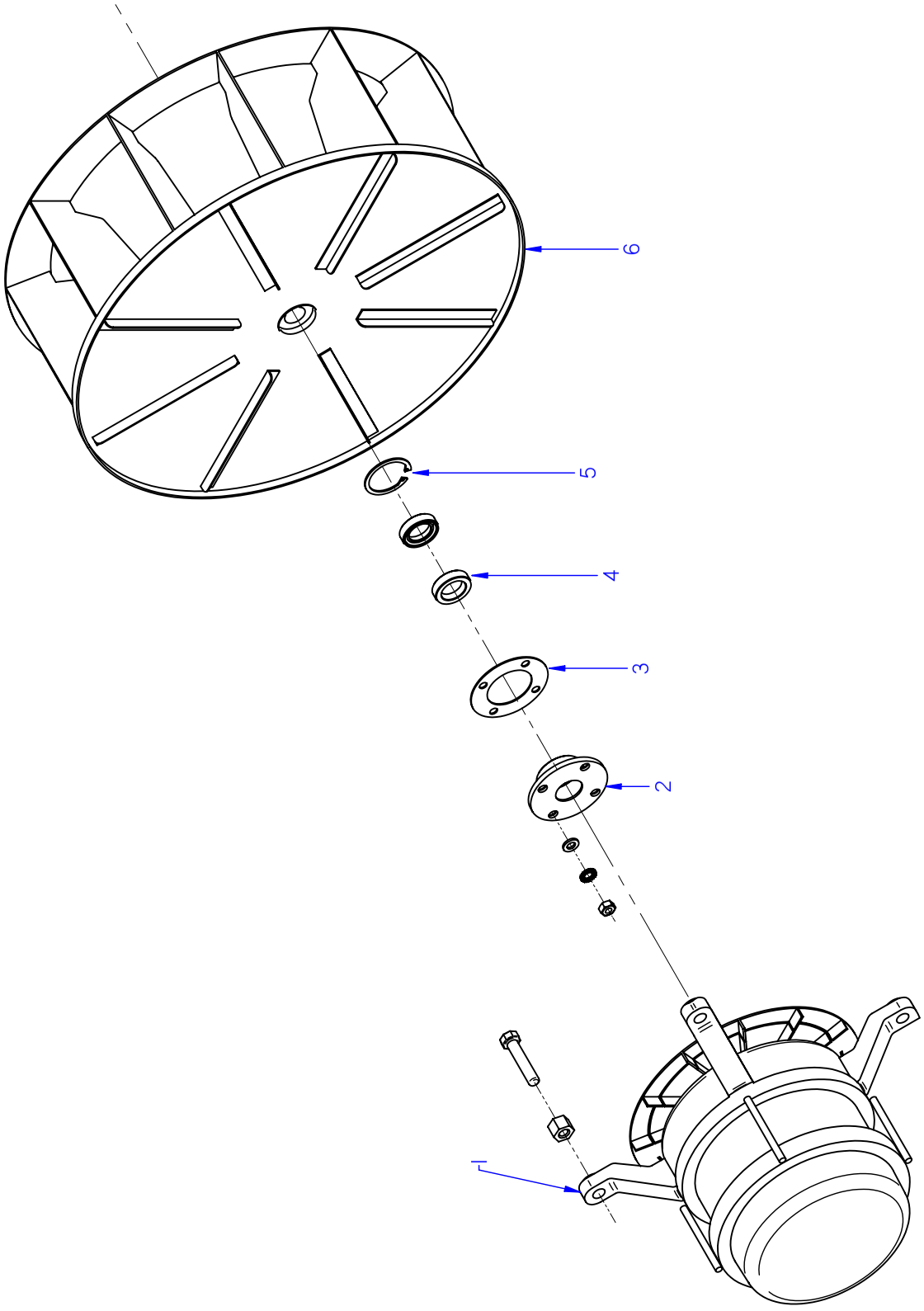

ITEM MARCADO EN COLOR = REPUESTO RECOMENDADO
COLOURED ITEM = RECOMMENDED SPARE PART

Nº plano / N.º plane	Firma	Fecha / Date	Denominación / Denomination: TURBINA / TURBINE	Lamina / Sheet	
C-3090		2012-09	HORNOS AG; ACG; APG-202	5	Fagor Industrial S.Coop. FAGOR Oñate

MOD.	HORNOS / OVEN	ZONA / ZONE	TURBINA / TURBINE	PLANO DIAGRAM	C-3090

ITEM	CODIGO REFERENCE	DENOMINACION	DENOMINATION	ACG-202	AG-202	APG-202						ELIMINADO ELIMINATED	INTRODUCID. INTRODUCED	NOTAS
1	12024325	MOTOR 230V AC 3N650KW 1450RP	MOTOR 230V AC 3N650KW 1450	2	2	2								
S/Nº	12023560	DISTANCIADOR MOTOR 10/21	SPACER MOTOR 10/21	8	8	8								
	12010110	ARANDELA PLANA Fe Zn 8,40MM	WASHER FLAT Fe Zn 8,40MM	8	8	8								
	12009840	ARANDELA ABANICO INOX 8MM	FAN SHAPED WASHER NOX 8MM	8	8	8								
	12010210	TORNILLO EXAGONAL INOX 8MM	HEXAGONAL SCREW INOX 8MM	8	8	8								
2	12024742	CASQUILLO RETEN 10/21	SEAL BUSHING 10/21	2	2	2								
3	12024221	JUNTA CASQUILLO RETEN	SEAL BUSHING GASKET	2	2	2								
	12009868	ARANDELA PLANA INOX 6MM	WASHER FLAT 6 MM INOX.	8	8	8								
	12009882	ARANDELA ABANICO A6 A.304	FAN SHAPED WASHER A.6	8	8	8								
	12010255	TORNILLO EXAGONAL M6 INOX.	HEXAGONAL SCREW M6 INOX.	8	8	8								
	12010056	TORNILLO EXAGONAL M8X40 INOX	HEXAGONAL SCREW M8X40 INO	8	8	8								
4	12024510	RETEN 17X28X7V	RETAINER 28x17x7	4	4	4								
5	12010122	ANILLO DE SEGURIDAD Ø 28X1.2	SAFETY RING 28x1,2	2	2	2								
6	12024306	TURBINA RECTA Ø350X127 HANN.	TURBINE RECTA Ø350X127 HAN	2	2	2								
	12024190	ARANDELA SEGURIDAD HANNING	HANNING SAFETY WASHER	2	2	2								
	12010030	TORNILLO EXAGONAL M10X20	HEXAGONAL SCREW M10X20	2	2	2								

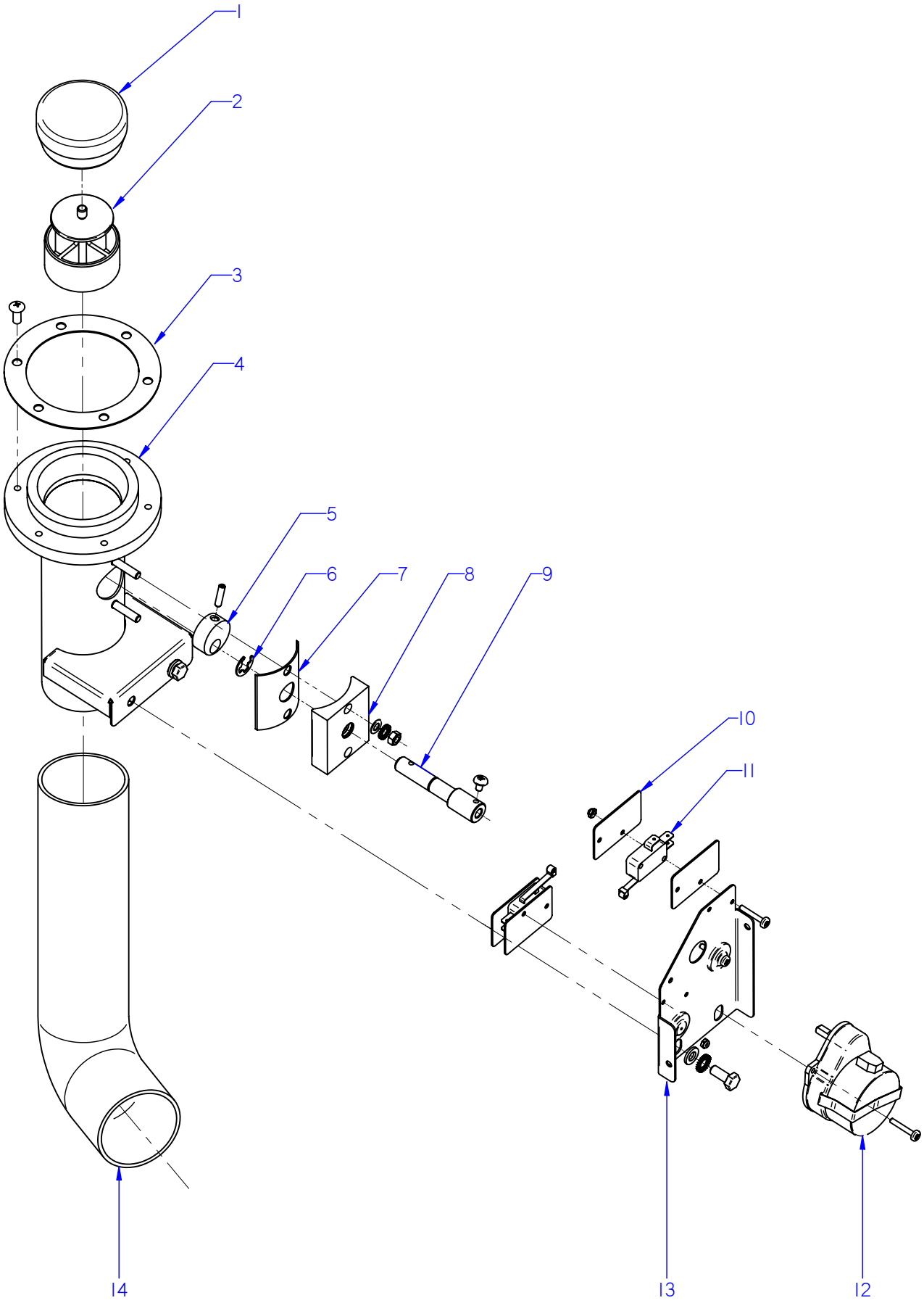

ITEM MARCADO EN COLOR = REPUESTO RECOMENDADO
COLOURED ITEM = RECOMMENDED SPARE PART

Nº plano / N º plane	Firma	Fecha / Date	Denominación / Denomination: CHIMENEA / FLUEPIPE	Lamina / Sheet	
C-3091		2012-09	HORNOS AG; ACG; APG-202	6	Fagor Industrial S.Coop. Oñate

MOD.	HORNOS / OVEN	ZONA / ZONE	CHIMENEA / FLUEPIPE	PLANO DIAGRAM	C-3091

ITEM	CODIGO REFERENCE	DENOMINACION	DENOMINATION	ACG-202	AG-202	APG-202						ELIMINADO ELIMINATED	INTRODUCID. INTRODUCED	NOTAS
1	12024520	RETENCION DE VAPORES	CLOSE CHIMNEY	1	1	1								
2	12024500	GUIA RETENCION VAPORES	STEAM RETAINER GUIDE	1	1	1								
3	12023576	JUNTA BASE CHIMENEA	FLUEPIPE BASE SEAL	1	1	1								
S/Nº	12095516	JUNTA TORICA 5x1	O-RING 5x1	6	6	6							17.10.13	
	12010242	TORNIL. APLASTADO M5X13 A 304	FLAT SCREW M.5x13	6	6	6								
4	12022868	CONJUNTO CHIMENEA	COMPLETE CHIMNEY	1	1	1						01.05.14		
4	12104226	CONJUNTO CHIMENEA	COMPLETE CHIMNEY	1	1	1							01.05.14	
	12010126	REMACHE EXAGONAL M.6	HEXAGONAL RIVET M.6	2	2	2								
5	12024328	LEVA EJE CHIMENEA	FLUEPIPE SHAFT CAM	1	1	1								
	12010258	VARILLA ROSCADA M4X16	THREADED ROD M4X16	1	1	1								
6	12010014	ARANDELA DE SEGURIDAD Ø8	SAFETY WASHER Ø8	1	1	1								
7	12023497	JUNTA EJE CHIMENEA	FLUEPIPE SHAFT SEAL	1	1	1								
8	12024436	GUIA EJE CHIMENEA	FLUEPIPE SHAFT GUIDE	1	1	1						01.05.14		
8	12098396	GUIA EJE CHIMENEA	FLUEPIPE SHAFT GUIDE	1	1	1							01.05.14	
S/Nº	12010274	JUNTA TORICA 9.19x2.62	O-RING 9.19x2.62	1	1	1							01.03.13	
	12009944	ARANDELA A5	FLAT WASHER A.5	2	2	2								
	12010284	TUERCA EXAGONAL M5	HEXAGONAL NUT M.5	2	2	2								
9	12024435	EJE CHIMENEA ELECTRICA	ELECTRIC FLUEPIPE SHAFT	1	1	1						01.05.14		
9	12104228	EJE CHIMENEA ELECTRICA	ELECTRIC FLUEPIPE SHAFT	1	1	1							01.05.14	
	12009876	TORNILLO ALOMADO M4X6 ZINC.	CURVED SCREW M4X6 ZINC.	1	1	1								
10	12009985	PLACA SEPARADORA	SPACER PLATE	4	4	4								
	12010247	TORNILLO ALOMADO M3X20	CURVED SCREW M3X20	4	4	4								
	12010289	TUERCA AUTOBLOCANTE M3	SELF-LOCKING NUT M3	4	4	4								
11	12025193	INTERRUPTOR PUERTA	DOOR SWITCH	2	2	2								
12	12024638	MOTOR CHIMENEA	FLUEPIPE MOTOR	1	1	1								
13	12022146	ESCUA. AMARRE MOTOR CHIMEN.	FLUEPIPE MOTOR FASTENING BRAC	1	1	1								
	12009868	ARANDELA A6	WASHER A6	2	2	2								
	12009882	ARANDELA ABANICO A6 A.304	FAN SHAPED WASHER A.6	2	2	2								
	12010186	TORNILLO EXAGONAL M6X15 A304	HEXAGONAL SCREW M6X15	2	2	2								
14	12024122	TUBO FLEXIBLE Ø53X360	FLEXIBLE TUBE Ø53X360	1	1	1								
	12009962	ABRAZADERA 40*60	CLAMP 40*60	2	2	2								

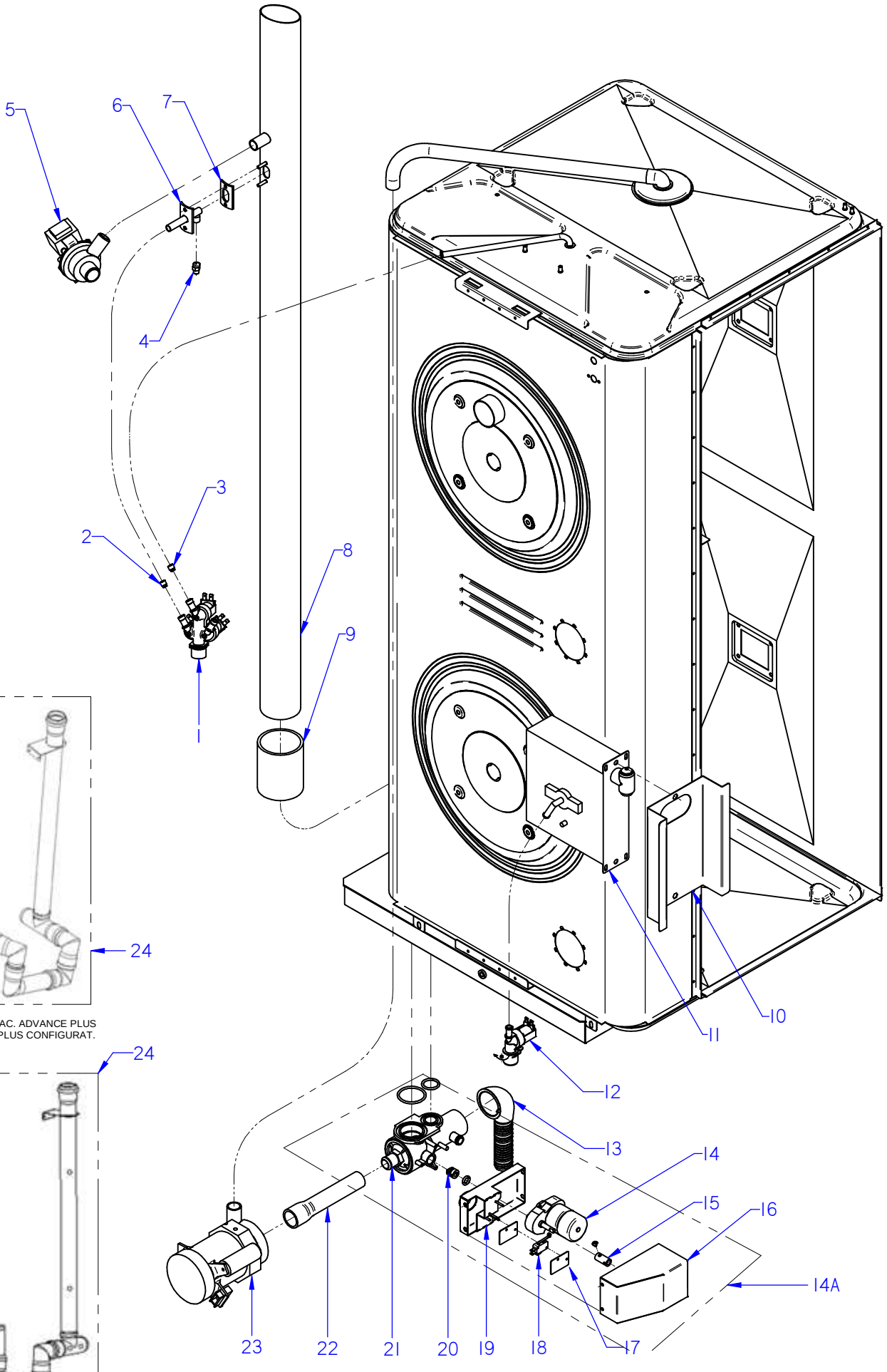

ITEM MARCADO EN COLOR = REPUESTO RECOMENDADO
COLOURED ITEM = RECOMMENDED SPARE PART

Nº plano / N º plane	Firma	Fecha / Date	Denominación / Denomination: CONDUCCIONES DE AGUA / WATER PIPES	Lamina / Sheet	
C-3092		2012-09	HORNOS AG; ACG; APG-202	7	Fagor Industrial S.Coop. FAGOR Oñate

MOD.	HORNOS / OVEN	ZONA / ZONE	CONDUCCIONES DE AGUA / WATER PIPES	PLANO DIAGRAM	C-3092

ITEM	CODIGO REFERENCE	DENOMINACION	DENOMINATION	ACG-202	AG-202	APG-202						ELIMINADO ELIMINATED	INTRODUCID. INTRODUCED	NOTAS
1	12025161	ELECTRO. 230VAC 50/60Hz 1VIA	SOLENOID VALVE 230VAC 1 V	1	_	_								
1	12023921	ELECTR. 230V AC 50/60Hz 3 VIAS A	SOLENOID 230V AC 50/60Hz 3 V	_	1	1						01.08.14		
1	12115418	ELECTR. 230V AC 50/60Hz 3 VIAS A	SOLENOID 230V AC 50/60Hz 3 V	_	1	1							01.08.14	
2	12025263	REGULADOR 1L AMARILLO 255.005	CONTROLLER YELL. 1L 255,005	_	1	1						01.12.13		
2	12096625	REGULADOR 1 L MARFIL	CONTROLLER 1L IVORY	_	1	1							01.12.13	
3	12008692	REGULADOR 0,5L. NARANJA	REGULATOR 0,5L. NARANJA	1	_	_						01.12.13		
3	12096624	REGULADOR 0,5 L ROJO	REGULATOR 0,5 L	1	_	_							01.12.13	
3	12024509	REGULADOR 0,25L. VERDE	REGULATOR 0.25 L. GREEN	_	1	1								
4	12024000	TOBERA 1/8	NOZZLE 1/8	_	1	1						31.03.13		
4	12049131	BOQUILLA 1/8M-B-1-3	INJECTOR 1/8M-B-1-3	_	1	1							31.03.13	
5	12039546	MOTOBOMBA 230V AC 1N 50/60Hz	PUMP 230V AC 50/60Hz 30W 1N	_	1	1								
	12009944	ARANDELA A5	FLAT WASHER A.5	_	2	2								
	12009890	ARANDELA ABANICO A5 A.304	FAN SHAPED WASHER A.5	_	2	2								
	12010221	TORNILLO EXAGONAL M5X15	HEXAGONAL BOLT M5X15	_	2	2								
	12010126	REMACHE EXAGONAL M.6	HEXAGONAL RIVET M.6	_	2	2								
6	12046239	AMARRE CONDUCC. VAHOS GAS	MOORING DRIVE GAS STEAM	1	_	_								
6	12039468	CONDUCC. VAHOS COMPLETO	COMPLETE VAPOUR DUCT	_	1	1								
7	12023605	JUNTA TUBO INYECTOR	INJECTOR PIPE SEAL	1	1	1								
8	12043809	CHIMENEA COMPLETA 202 ACE	COMPL. FLUEPIPE 202 ACE	1	_	_								
8	12041844	CHIMENEA COMPLETA 202 ADV	COMPLET FLUEPIPE 202 ADV	_	1	1								
S/Nº	12024463	CONDENSADOR ELEC. 250V VDE	CONDENSER ELEC. 250V VDE	1	1	1								
9	12023982	TUBO EMPALME GENERADOR	SPLICE TUBE GENERATOR	1	1	1								
	12009914	ABRAZADERA 70-90	CLAMP 70-90	2	2	2								
10	12039369	SOPORTE DUCHA 202	SHOWER 202 STAND	_	1	1							28.03.14	
11	12040977	DUCHA	SHOWER	_	1	1								
	12010267	ARANDELA 16X6X1.2 A.304	FLAT WASHER 16X6X1.2 A.304	_	2	2								
	12009882	ARANDELA ABANICO A6 A.304	FAN SHAPED WASHER A.6	_	2	2								
	12010186	TORNILLO EXAGONAL M6X15 A304	HEXAGONAL SCREW M6X15	_	2	2								
12	12025161	ELECTROVALV. 230VAC 50/60Hz 1V	SOLENOID VALVE 230VAC 1 V	_	1	1								
13	12024473	MANGUERA DESAGUE	DRAIN HOSE	_	_	1								
14A	**12126816**	**KIT VALVULA DESAGUE ADVAN.**	**VALVE DRAIN ADVANCE KIT**	_	_	**1**							**12.07.13**	

MOD.	HORNOS / OVEN	ZONA / ZONE	CONDUCCIONES DE AGUA / WATER PIPES	PLANO DIAGRAM	C-3092

ITEM	CODIGO REFERENCE	DENOMINACION	DENOMINATION	ACG-202	AG-202	APG-202						ELIMINADO ELIMINATED	INTRODUCID. INTRODUCED	NOTAS
14	12024754	MOTORREDUCTOR 230V AC 1N	MOTOREDUCER 230V AC 1N	_	_	1						02.03.15		
14	12122403	MOTORREDUCTOR 230V AC 1N	MOTOREDUCER 230V AC 1N	_	_	1							02.03.15	
15	12023906	CASQUILLO MOTOR MICRO	MICRO MOTOR BUSHING	_	_	1								
16	12003203	TAPA SISTEMA LAVADO	TOP WASH SYSTEM	_	_	1						02.03.15		
16	12122407	TAPA SISTEMA LAVADO	TOP WASH SYSTEM	_	_	1							02.03.15	
	12010242	TORNIL. APLASTADO M5X13 A 304	FLAT SCREW M.5x13	_	_	4								
17	12009985	PLACA SEPARADORA	SPACER PLATE	_	_	4								
	12010247	TORNILLO ALOMADO M3X20	CURVED SCREW M3X20	_	_	7								
	12010289	TUERCA AUTOBLOCANTE M3	SELF-LOCKING NUT M3	_	_	7								
18	12025193	INTERRUPTOR PUERTA	DOOR SWITCH	_	_	2								
19	12003183	SOPORTE MICROS LAVADO	MICROS WASH STAND	_	_	1						02.03.15		
19	12122404	SOPORTE MICROS LAVADO	MICROS WASH STAND	_	_	1							02.03.15	
	12010163	REMACHE EXAGONAL M.5	HEXAGONAL RIVET M.5	_	_	4								
20	12023796	PUNTA ACOPLE MOTOR A VALVUL	CONN. POINT MOTOR TO VALVE	_	_	1								
	12019645	JUNTA TORICA Ø10x3.5	O-RING Ø10X3.5	_	_	1								
S/Nº	12010273	MANG. SUJEC. 4X14 DIN1481	CLAMPING SLEEVE 4x14 DIN 1481	_	_	1								
21	12024796	CUERPO VALVULA COMPLETO	COMPLETE VALVE BODY	_	_	1								
	12010081	JUNTA TORICA Ø52X3,5	O-RING Ø52X3.5	_	_	1								
	12010131	JUNTA TORICA Ø33x3,5	O-RING Ø33x3.5	_	_	1								
	12024532	JUNTA TEFLON VALVULA	TEFLON VALVE BOARD	_	_	2								
	12009181	JUNTA TEFLON VALVULA	TEFLON VALVE BOARD	_	_	2								
22	12024425	GOMA VALVULA BOMBA	PUMP VALVE RUBBER	_	_	1								
	12010023	ABRAZADERA 20-32	CLAMP 20-32	_	_	1								
	12009997	ABRAZADERA 25-40	CLAMP 25-40	_	_	1								
23	12024782	MOTOBOMBA 230V AC 1N 50Hz	MOTOR 230V AC 1N 50Hz 74,6	_	_	1								
	12009868	ARANDELA PLANA INOX 6MM	WASHER FLAT 6 MM INOX.	_	_	2								
	12009882	ARANDELA ABANICO A6 A.304	FAN SHAPED WASHER A.6	_	_	2								
	12010186	TORNILLO EXAGONAL M6X15 A304	HEXAGONAL SCREW M6X15	_	_	2								
S/Nº	12025198	MANGUERA ENTRADA AGUA	WATER INLET HOSE	1	1	1								
23	12047404	MOD CONJUNTO DESAGUE ADV	ADV DRAIN SET MODEL	1	1	1							03,12,12	

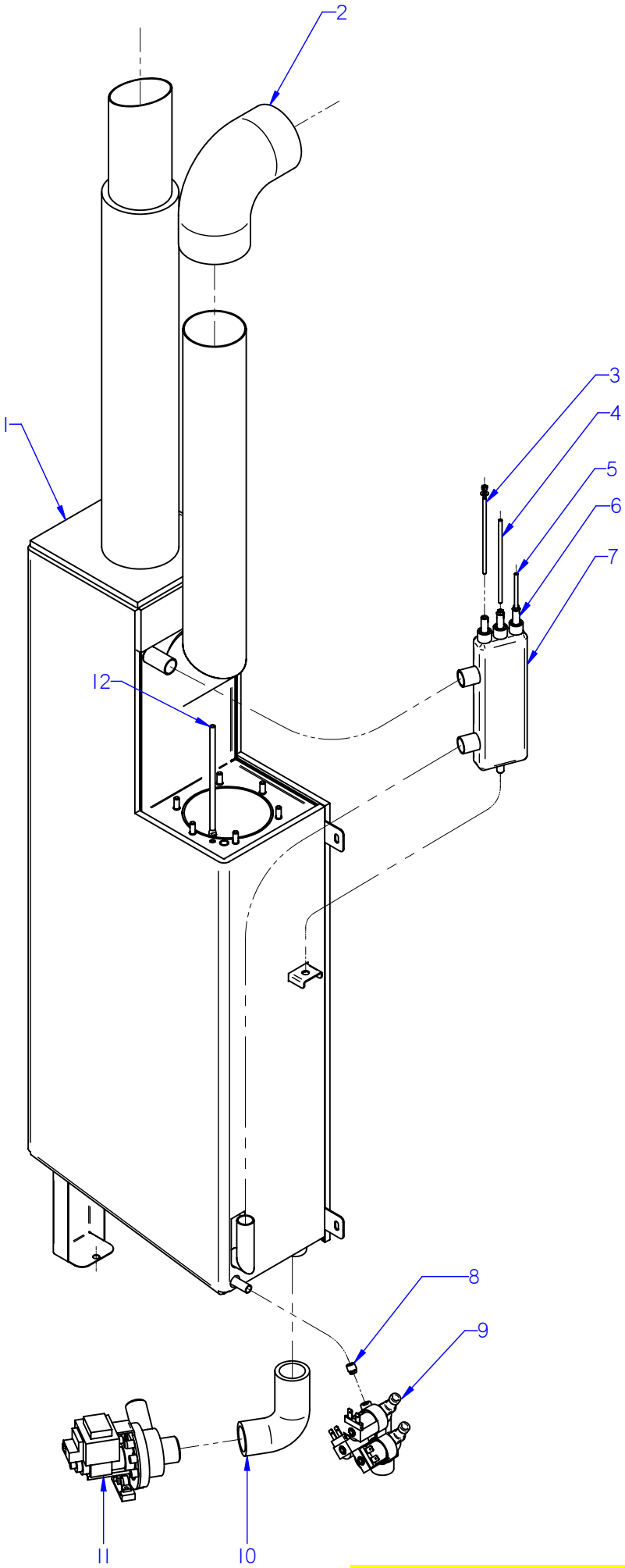

ITEM MARCADO EN COLOR = REPUESTO RECOMENDADO
COLOURED ITEM = RECOMMENDED SPARE PART

Nº plano / N º plane	Firma	Fecha / Date	Denominación / Denomination: CIRCUITO DE VAPOR / STEAM CIRCUIT	Lamina / Sheet	
C-3093		2012-09	HORNOS AG; APG-202	8	Fagor Industrial S.Coop. Oñate FAGOR

MOD.	HORNOS / OVEN	ZONA / ZONE	CIRCUITO DE VAPOR / STEAM CIRCUIT	PLANO DIAGRAM	C-3093

ITEM	CODIGO REFERENCE	DENOMINACION	DENOMINATION	AG-202	APG-202							ELIMINADO ELIMINATED	INTRODUCID. INTRODUCED	NOTAS
1	**12046110**	**KIT GENERADOR VAPOR 202**	**STEAM GENERATOR 202 KIT**	**1**	**1**									
2	12044832	CODO Ø 73	ELBOW Ø 73	1	1									
	12009914	ABRAZADERA 70-90	CLAMP 70-90	2	2									
3	12023573	ELECTRODO ALTO	HIGH LEVEL ELECTRODE	1	1									
4	12023574	ELECTRODO BAJO	LOW LEVEL ELECTRODE	1	1									
5	12023575	ELECTRODO DE MASA	EARTH ELECTRODE	1	1									
	12009987	ARANDELA A4	FLAT WASHER A4	3	3									
	12009839	TUERCA EXAGONAL M4	HEXAGONAL NUT M.4º	3	3									
6	12024460	GUIA AISLANTE	INSULATION GUIDE	3	3									
7	12024419	BOTE DE NIVELES	LEVELS VESSEL	1	1							02.06.14		
7	12113061	BOTE DE NIVELES INOX	LEVELS VESSEL S.STEEL	1	1								02.06.14	
	12010044	TUERCA EXAGONAL M8 PLASTIC	HEXAGONAL NUT M8 PLASTIC	1	1									
S/Nº	11000157	TUBO SILICONA Tº Ø 26*18	HIGH SILICON PIPE Tº Ø 26*18	2	2									
	12009628	ABRAZADERA ELASTICA 26,7*28,1	ELAST. CLAMP 26,7*28,1	4	4									
8	12024045	REGULADOR 8L 54.034 ROJO	REGULATOR 8L RED 54.034	1	1							10.11.13		
8	12096626	REGULADOR 8 L AZUL	BLUE REGULATOR 8L	1	1								10.11.13	
9	12023921	ELECTR. 230V AC 50/60Hz 3 VIAS A	SOLENOID 230V AC 50/60Hz 3 V	1	1									
S/Nº	11000083	T. GOMA NEGRA Ø17*10	BLACK RUBBER PIPE Ø17*10	2	2									
	12010036	ABRAZADERA 12*20	CLAMP 12-20	4	4									
10	12039649	TUBO DESAGUE GENERADOR	DRAIN TUBE GENERATOR	1	1									
	12009997	ABRAZADERA 25-40	CLAMP 25-40	2	2									
11	12039546	MOTOBOMBA 230V AC 1N 50/60Hz	PUMP 230V AC 50/60Hz 30W 1N	1	1									
12	12023901	CONJUN. TERMOPAR VAPOR	STEAM THERMOCOUPLE UNIT	1	1									

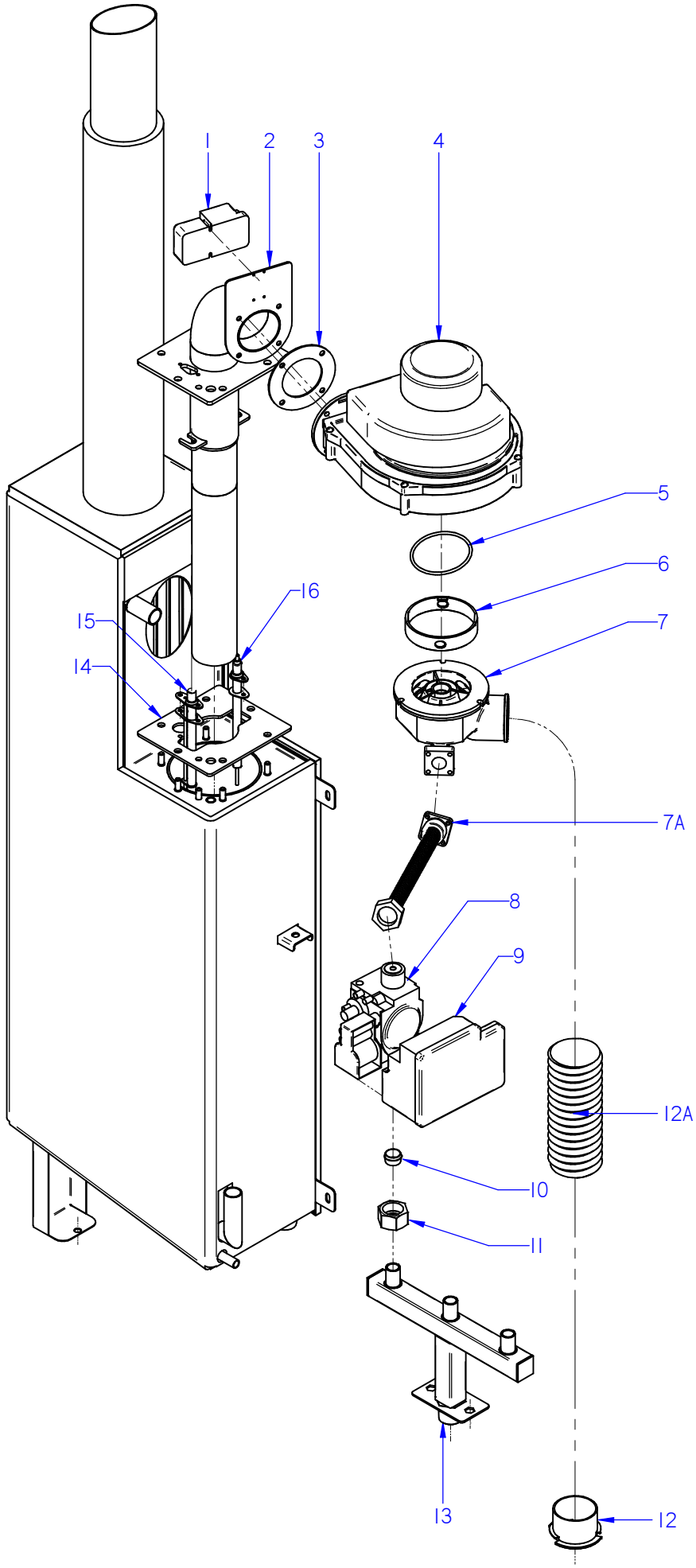

ITEM MARCADO EN COLOR = REPUESTO RECOMENDADO
COLOURED ITEM = RECOMMENDED SPARE PART

Nº plano / N º plane	Firma / Signature	Fecha / Date	Denominación / Denomination: FUNC. GAS GENERADOR / FUNCT. GAS GENERATOR	Lamina / Sheet	
C-3094	Iban R.	2014-09	HORNOS AG; APG-202	9	Fagor Industrial S.Coop. FAGOR Oñate

MOD.	HORNOS / OVEN	ZONA / ZONE	FUNCIONAL GAS GENERADOR FUNCTIONAL GAS GENERATOR	PLANO DIAGRAM	C-3094

ITEM	CODIGO REFERENCE	DENOMINACION	DENOMINATION	AG-202	APG-202							ELIMINADO ELIMINATED	INTRODUCID. INTRODUCED	NOTAS
1	12039544	CHISPA BRAHMA	BRAHMA SPARK	1	1									
	12009971	TORNILLO ALOMADO M3X30 H.ZIN	CURVED SCREW M3X30 H.ZINC	2	2									
	12010289	TUERCA AUTOBLOCANTE M3	SELF-LOCKING NUT M3	2	2									
2	12039427	QUEMADOR GENERADOR 202G	BURNER GENERATOR 202G	1	1									
3	12045252	JUNTA ACOP.SOPLANTE GRAFITO	JOINT COU. GRAPHITE BLOWER	1	1									
	12009944	ARANDELA A5	FLAT WASHER A.5	4	4									
	12009890	ARANDELA ABANICO A5 A.304	FAN SHAPED WASHER A.5	4	4									
	12010284	TORNILLO EXAGONAL M5 INOX.	HEXAGONAL SCREW M5 INOX.	4	4									
	12010221	TORNILLO EXAGONAL M5X15 INOX	HEXAGONAL SCREW M5X15 INC	4	4									
4	12039373	VENTILADOR RG-148	RG-148 FAN	1	1									
5	12009940	JUNTA TORICA114x3	O-RING 114x3	1	1									
6	12039436	ARANDELA MIXER VAPOR	WASHER STEAM MIXER	1	1									
7	12039279	MIXER COMPL GEN 202	GENERATOR 202 MIXER COMPL.	1	1									
	12009987	ARANDELA PLANA INOX 4MM	WASHER FLAT 4 MM INOX.	3	3									
	12009971	TORNILLO ALOMADO M4X15 ZINC	CURVED SCREW M4X15 ZINC	3	3									
7A	12039403	TUBO GAS FLEXIBLE 900	FLEXIBLE GAS PIPE 900	1	1									
8	12046364	VALVULA REGUL 50HZ ADV	ADV 50HZ VALVE CONTROLL.	1	1									
8	12046365	VALVULA REGUL 60HZ ADV	ADV 60HZ VALVE CONTROLL.	1	1									
9	12039440	CAJA CONTROL DBC 579	DBC CONTROL BOX 579	1	1									
10	12039566	TOBERA Ø 5,9 BP	NOZZLE Ø 5,9 BP	1	1									
10	_____	GN (SIN INYECTOR)	(WITHOUT INJECTOR)GN	1	1									
11	12008085	TUERCA 3/4	NUT 3/4	1	1							18.02.13		
11	12048850	TUERCA G 3/4	NUT G 3/4	1	1								18.02.13	
S/Nº	12008775	BICONO Ø16	BICONE Ø16	1	1									
12	12039679	AMARRE TUBOS AIRE	MOORING PIPES AIR	1	1									
12A	11000232	TUBO AIRE VULCANO PUZ 50	AIR TUBE VULCANO PUZ 50	1	1									
13	12041051	ENTRADA GAS CO. ADV 202 SUB	ADV GAS INLET ADV 202 SUB	1	1									
	12009944	ARANDELA A5	FLAT WASHER A.5	2	2									
	12009890	ARANDELA ABANICO A5 A.304	FAN SHAPED WASHER A.5	2	2									
	12010221	TORNILLO EXAGONAL M5X15 INOX	HEXAGONAL SCREW M5X15 INC	2	2									

MOD.	HORNOS / OVEN	ZONA / ZONE	FUNCIONAL GAS GENERADOR FUNCTIONAL GAS GENERATOR	PLANO DIAGRAM	C-3094

ITEM	CODIGO REFERENCE	DENOMINACION	DENOMINATION	AG-202	APG-202							ELIMINADO ELIMINATED	INTRODUCID. INTRODUCED	NOTAS
14	12039399	JUNTA GRAFITO	GRAPHITE JOINT	1	1									
	12009868	ARANDELA PLANA INOX 6MM	WASHER FLAT 6 MM INOX.	4	4									
	12009882	ARANDELA ABANICO A6 A.304	FAN SHAPED WASHER A.6	4	4									
	12010130	TUERCA EXAGONAL M6 LATON	HEXAGONAL NUT M6 BRASS	4	4									
15	12039430	BUJIA GENERADOR 202	PLUG GENERATOR 202	1	1									
S/Nº	12039587	JUNTA BUJIA GENERADOR 06/101	PLUG BOARD GENERATOR 06/10	1	1									
	12045140	TORNILLO M4X10 LATON	SCREW M4 BRASS	2	2									
	12010244	TUERCA EXAGONAL M4 LATON	HEXAGONAL NUT M4 BRASS	2	2									
16	12039431	DETECTOR GENERADOR 202	GENERATOR SENSOR 202	1	1									
S/Nº	12039450	JUNTA BUJIA CONVECCION 102	SPARK CONVECTI. BOARD 102	1	1									
	12045140	TORNILLO M4X10 LATON	SCREW M4 BRASS	2	2									
	12010244	TUERCA EXAGONAL M4 LATON	HEXAGONAL NUT M4 BRASS	2	2									

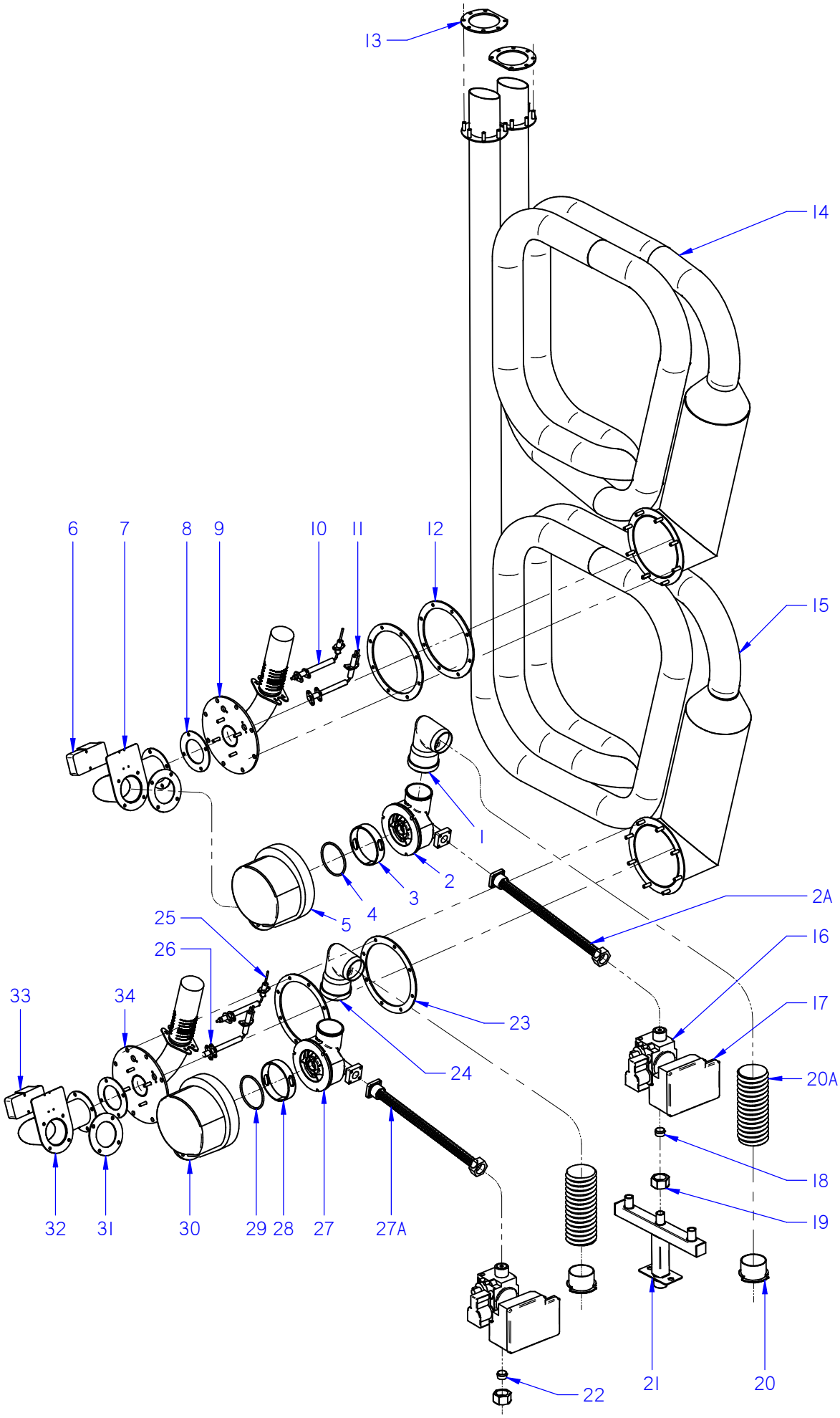

ITEM MARCADO EN COLOR = REPUESTO RECOMENDADO
COLOURED ITEM = RECOMMENDED SPARE PART

Nº plano / N º plane	Firma / Signature	Fecha / Date	Denominación / Denomination:FUNC. GAS CONVECCION / FUNCT. GAS CONVECTION	Lamina / Sheet	
C-3095	Iban R.	2014-09	HORNOS AG; ACG; APG-202	10	Fagor Industrial S.Coop. FAGOR Oñate

MOD.	HORNOS / OVEN	ZONA / ZONE	FUNCIONAL GAS CONVECCION FUNCTIONAL GAS CONVECTION	PLANO DIAGRAM	C-3095

ITEM	CODIGO REFERENCE	DENOMINACION	DENOMINATION	ACG-202	AG-202	APG-202						ELIMINADO ELIMINATED	INTRODUCID. INTRODUCED	NOTAS
1	12044447	TUBO DESAGUE ADV 01	DRAIN PIPE ADV 01	1	1	1								
2	12039278	MIXER COMPL. CONVEC 102- 202	CONVECT 102- 202 MIXER COM.	1	1	1								
	12009868	ARANDELA PLANA INOX 6MM	WASHER FLAT 6 MM INOX.	3	3	3								
	12010084	TORNILLO ALLEN INOX M6X40MM	SCREW ALLEN INOX M6X40MM	3	3	3								
2A	12039403	TUBO GAS FLEXIBLE 900	FLEXIBLE GAS PIPE 900	1	1	1								
3	12039435	ARANDELA MIXER CONVECCION	CONVECTION WASHER MIXER	1	1	1								
4	12009940	JUNTA TORICA114x3	O-RING 114x3	1	1	1								
5	12044607	SOPLANTE NRG 118 55kw	BLOWER NRG 118 55kw	1	1	1								
6	12039544	CHISPA BRAHMA	BRAHMA SPARK	1	1	1								
	12009971	TORNILLO ALOMADO M3X30 H.ZIN	CURVED SCREW M3X30 H.ZINC	2	2	2								
	12010289	TUERCA AUTOBLOCANTE M3	SELF-LOCKING NUT M3	2	2	2								
7	12039402	CAMARA SILENCIADOR 202	CHAMBER MUFFLER 202	1	1	1								
	12010221	TORNILLO EXAGONAL M5X15 INOX	HEXAGONAL SCREW M5X15 INC	4	4	4								
8	12045252	JUNTA ACOP.SOPLANTE GRAFITO	JOINT COU. GRAPHITE BLOWER	2	2	2								
	12009944	ARANDELA A5	FLAT WASHER A.5	8	8	8								
	12009890	ARANDELA ABANICO A5 A.304	FAN SHAPED WASHER A.5	8	8	8								
	12010284	TORNILLO EXAGONAL M5 INOX.	HEXAGONAL SCREW M5 INOX.	8	8	8								
9	12039442	QUEMADOR CONVECCION 102	BURNER CONVECTION 102	1	1	1								
10	12039448	DETECTOR CONVECCION 1021	CONVECTION DETECTOR 1021	1	1	1								
S/Nº	12039450	JUNTA BUJIA CONVECCION 102	PLUG BOARD CONVECTION 102	1	1	1								
	12045140	TORNILLO M4X10 LATON	SCREW M4 BRASS	2	2	2								
	12010244	TUERCA EXAGONAL M4 LATON	HEXAGONAL NUT M4 BRASS	2	2	2								
11	12039447	BUJIA CONVECCION 1021	SPARK CONVECTION 1021	1	1	1								
S/Nº	12039449	102 JUNTA BUJIA CONVECCION	102 SPARK CONVECTI. BOARD	1	1	1								
	12045140	TORNILLO M4X10 LATON	SCREW M4 BRASS	2	2	2								
	12010244	TUERCA EXAGONAL M4 LATON	HEXAGONAL NUT M4 BRASS	2	2	2								
12	12039398	JUNTA INF INTERCAMBIADOR 202	202 EXCHANGER JOINT LOWER	2	2	2								
	12009868	ARANDELA PLANA INOX 6MM	WASHER FLAT 6 MM INOX.	8	8	8								
	12009882	ARANDELA ABANICO A6 A.304	FAN SHAPED WASHER A.6	8	8	8								
	12010130	TUERCA EXAGONAL M6 LATON	HEXAGONAL NUT M6 BRASS	8	8	8								

MOD.	HORNOS / OVEN	ZONA / ZONE	FUNCIONAL GAS CONVECCION FUNCTIONAL GAS CONVECTION	PLANO DIAGRAM	C-3095

ITEM	CODIGO REFERENCE	DENOMINACION	DENOMINATION	ACG-202	AG-202	APG-202						ELIMINADO ELIMINATED	INTRODUCID. INTRODUCED	NOTAS
13	12039396	202 JUNTA INTERCAMBIADOR	EXCHANGER JOINT 202	2	2	2								
	12009868	ARANDELA PLANA INOX 6MM	WASHER FLAT 6 MM INOX.	14	14	14								
	12009882	ARANDELA ABANICO A6 A.304	FAN SHAPED WASHER A.6	14	14	14								
	12010130	TUERCA EXAGONAL M6 LATON	HEXAGONAL NUT M6 BRASS	14	14	14								
14	12039395	INTERCAMBIADOR SUPERIOR 202	UPPER 202 EXCHANGER	1	1	1								
15	12039397	INTERCAMBIADOR INFERIOR 202	LOWER 202 EXCHANGER	1	1	1								
16	12046364	VALVULA REGUL 50HZ ADV	ADV 50HZ VALVE CONTROLL.	2	2	2								
16	12046365	VALVULA REGUL 60HZ ADV	ADV 60HZ VALVE CONTROLL.	2	2	2								
17	12039440	CAJA CONTROL DBC 579	DBC CONTROL BOX 579	2	2	2								
18	12045675	TOBERA Ø 5,2 BP	NOZZLE Ø 5,2 BP	1	1	1								
18	12045677	TOBERA Ø 7,5 GN	NOZZLEØ 7,5 GN	1	1	1								
19	12008085	TUERCA 3/4	NUT 3/4	2	2	2						18.02.13		
19	12048850	TUERCA G 3/4	NUT G 3/4	2	2	2							18.02.13	
S/Nº	12008775	BICONO Ø16	BICONE Ø16	2	2	2								
20	12039679	AMARRE TUBOS AIRE	MOORING PIPES AIR	2	2	2								
20A	11000232	TUBO AIRE VULCANO PUZ 50	AIR TUBE VULCANO PUZ 50	2	2	2								
21	12044366	ENTRADA GAS CO. ACG 202 SUB	GAS INLET ACG 202 SUB	1	_	_								
21	12041051	ENTRADA GAS CO. ADV 202 SUB	GAS INLET ADV 202 SUB	_	1	1								
	12009944	ARANDELA A5	FLAT WASHER A.5	2	2	2								
	12010221	TORNILLO EXAGONAL M5X15 INOX	HEXAGONAL SCREW M5X15 INO	2	2	2								
22	12045675	TOBERA Ø 5,2 BP	NOZZLE Ø 5,2 BP	1	1	1								
22	12045673	TOBERA Ø8 GN	NOZZLE Ø8 GN	1	1	1								
23	12039398	JUNTA INF INTERCAMBIADOR 202	202 EXCHANGER JOINT LOWER	2	2	2								
	12009868	ARANDELA PLANA INOX 6MM	WASHER FLAT 6 MM INOX.	8	8	8								
	12009882	ARANDELA ABANICO A6 A.304	FAN SHAPED WASHER A.6	8	8	8								
	12010130	TUERCA EXAGONAL M6 LATON	HEXAGONAL NUT M6 BRASS	8	8	8								
24	12044447	TUBO DESAGUE ADV 01	DRAIN PIPE ADV 01	1	1	1								
25	12039448	DETECTOR CONVECCION 1021	CONVECTION DETECTOR 1021	1	1	1								
S/Nº	12039450	JUNTA BUJIA CONVECCION 102	PLUG BOARD CONVECTION 102	1	1	1								
	12045140	TORNILLO M4X10 LATON	SCREW M4 BRASS	2	2	2								
	12010244	TUERCA EXAGONAL M4 LATON	HEXAGONAL NUT M4 BRASS	2	2	2								

MOD.	HORNOS / OVEN	ZONA / ZONE	FUNCIONAL GAS CONVECCION FUNCTIONAL GAS CONVECTION	PLANO DIAGRAM	C-3095

ITEM	CODIGO REFERENCE	DENOMINACION	DENOMINATION	ACG-202	AG-202	APG-202						ELIMINADO ELIMINATED	INTRODUCID. INTRODUCED	NOTAS
26	12039447	BUJIA CONVECCION 1021	SPARK CONVECTION 1021	1	1	1								
S/Nº	12039449	102 JUNTA BUJIA CONVECCION	102 SPARK CONVECTI. BOARD	1	1	1								
	12045140	TORNILLO M4X10 LATON	SCREW M4 BRASS	2	2	2								
	12010244	TUERCA EXAGONAL M4 LATON	HEXAGONAL NUT M4 BRASS	2	2	2								
27	12039278	MIXER COMPL. CONVEC 102- 202	CONVECT 102- 202 MIXER COM.	1	1	1								
	12009868	ARANDELA PLANA INOX 6MM	WASHER FLAT 6 MM INOX.	3	3	3								
	12010084	TORNILLO ALLEN INOX M6X40MM	SCREW ALLEN INOX M6X40MM	3	3	3								
27A	12039403	TUBO GAS FLEXIBLE 900	FLEXIBLE GAS PIPE 900	1	1	1								
28	12039435	ARANDELA MIXER CONVECCION	CONVECTION WASHER MIXER	1	1	1								
29	12009940	JUNTA TORICA114x3	O-RING 114x3	1	1	1								
30	12044607	SOPLANTE NRG 118 55kw	BLOWER NRG 118 55kw	1	1	1								
31	12045252	JUNTA ACOP.SOPLANTE GRAFITO	JOINT COU. GRAPHITE BLOWER	2	2	2								
	12009944	ARANDELA A5	FLAT WASHER A.5	8	8	8								
	12009890	ARANDELA ABANICO A5 A.304	FAN SHAPED WASHER A.5	8	8	8								
	12010284	TORNILLO EXAGONAL M5 INOX.	HEXAGONAL SCREW M5 INOX.	8	8	8								
32	12039402	CAMARA SILENCIADOR 202	CHAMBER MUFFLER 202	1	1	1								
	12010221	TORNILLO EXAGONAL M5X15 INOX	HEXAGONAL SCREW M5X15 INC	4	4	4								
33	12039544	CHISPA BRAHMA	BRAHMA SPARK	1	1	1								
	12009971	TORNILLO ALOMADO M3X30 H.ZIN	CURVED SCREW M3X30 H.ZINC	2	2	2								
	12010289	TUERCA AUTOBLOCANTE M3	SELF-LOCKING NUT M3	2	2	2								
34	12039442	QUEMADOR CONVECCION 102	BURNER CONVECTION 102	1	1	1								

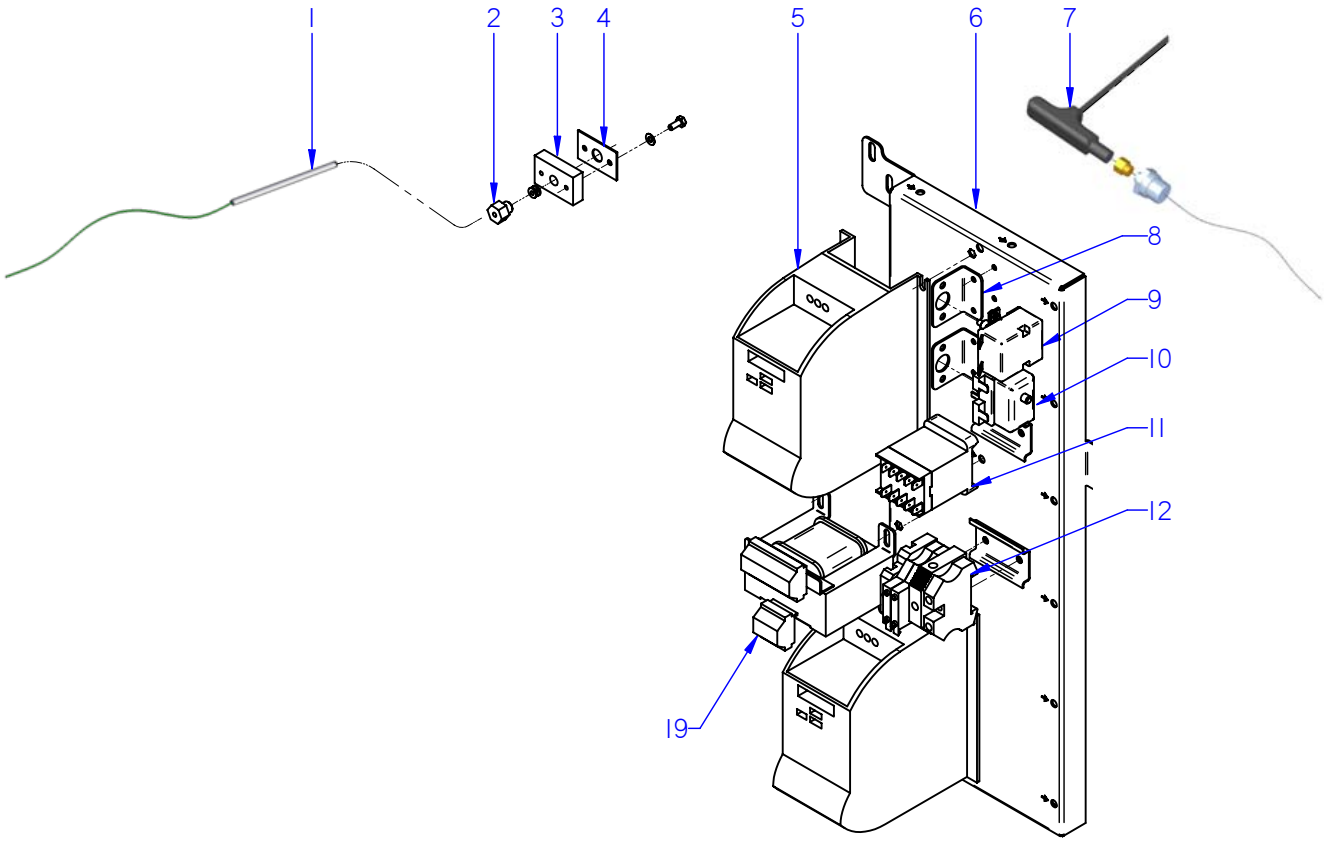

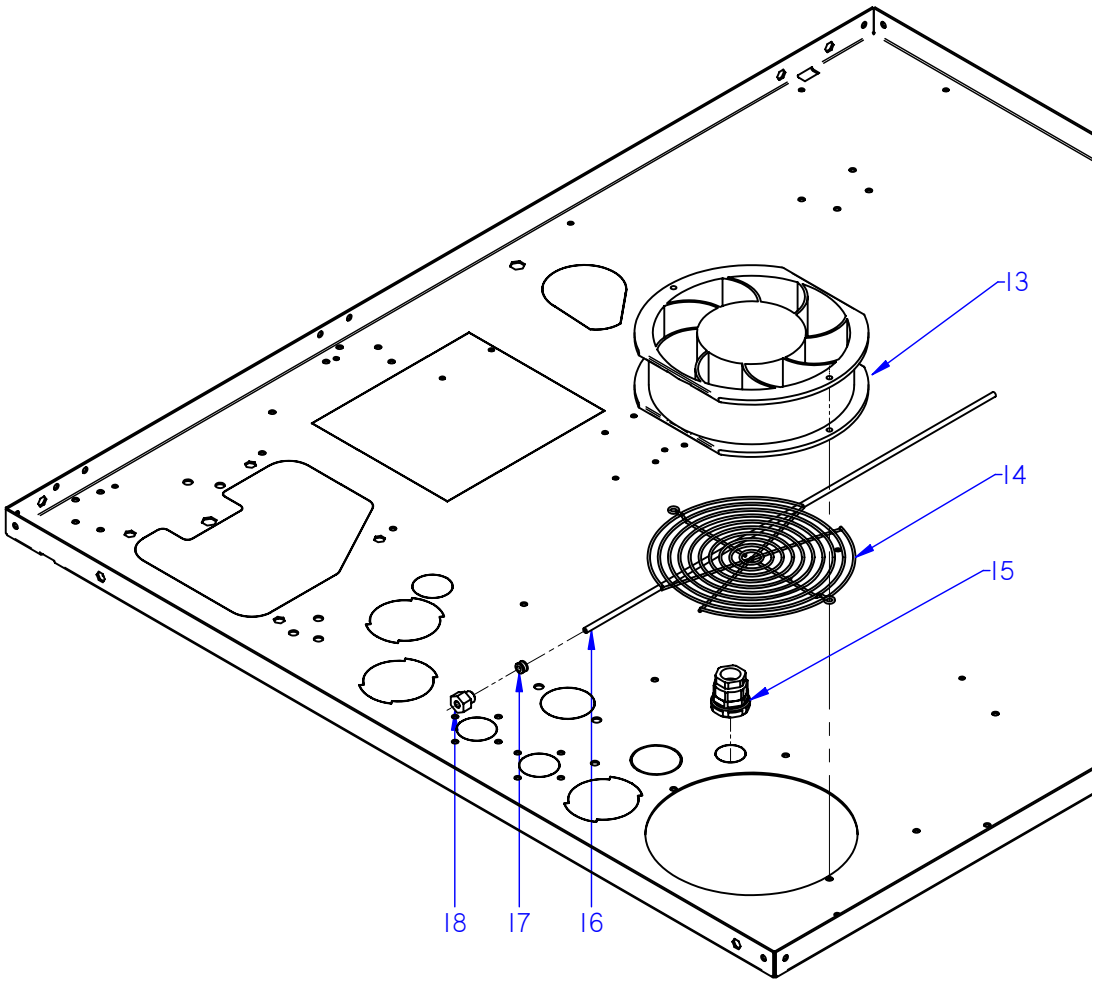

ITEM MARCADO EN COLOR = REPUESTO RECOMENDADO
COLOURED ITEM = RECOMMENDED SPARE PART

Nº plano / N º plane	Firma	Fecha / Date	Denominación / Denomination: CUADRO ELECTRICO / ELECTRIC PANEL	Lamina / Sheet	
C-3096		2012-09	HORNOS AG; ACG; APG-202	11	Fagor Industrial S.Coop. FAGOR Oñate

MOD.	HORNOS / OVEN	ZONA / ZONE	CUADRO ELECTRICO / ELECTRIC PANEL	PLANO DIAGRAM	C-3096

ITEM	CODIGO REFERENCE	DENOMINACION	DENOMINATION	ACG-202	AG-202	APG-202						ELIMINADO ELIMINATED	INTRODUCID. INTRODUCED	NOTAS
1	12024642	CONJUN. TERMOPAR CAMARA (K)	CHAMBER THERMOCOUPLE UNIT (K)	1	1	1								
2	12023581	RACORD CIERRE SONDA	PROBE CLOSING ADAPTOR	2	2	2								
S/Nº	12024247	BICONO CIERRE SONDA	PROBE CLOSING BICONE	1	1	1								
3	12023737	BASE CIERRE SONDA	FIXING CORE PROBE	1	1	1								
4	12023504	JUNTA PASAMUROS SIMPLE	SIMPLE	1	1	1								
	12010249	TORNILLO EXAGONAL M4X10	HEXAGONAL BOLT M4X10	4	4	4								
5	12024329	VARIADOR FRECUENCIA SIE 0,37KW	FREQUENCY VARIATOR SIE 0.37	2	2	2						26.02.13		
5	12048798	REP VARIADOR REGULADO ADV	REGULATED VARIATOR ADV	2	2	2							26.02.13	
	12009987	ARANDELA A4	FLAT WASHER A.4	8	8	8								
	12009928	ARANDELA ABANICO A4 A.304	FAN SHAPED WASHER A.4	8	8	8								
	12010278	TORNILLO ALOMADO M4X10	CURVED SCREW M.4x10	8	8	8								
S/Nº	12024067	CASQUILLO	BUSHING	4	4	4							13.05.13	
S/Nº	12025235	CONECTOR PASO 3,96MM 8 VIAS	CONNECTOR ROUTES 3,96MM 8	1	1	1								
6	12039371	CUADRO ELECT 202 G ADVAN	ELECTRICAL PANEL 202 G ADV	1	1	1								
	12010158	REMACHE EXAGONAL M.4	HEXAGONAL RIVET M.4	6	6	6								
	12009890	ARANDELA ABANICO A5 A.304	FAN SHAPED WASHER A.5	3	3	3								
	12010221	TORNILLO EXAGONAL M5x15	HEXAGONAL SCREW M.5x15	3	3	3								
7	12039548	SONDA PINCHO ADVANCE	ADVANCE PROBE PINCHO	1	1	1								
	12010110	ARANDELA Ø 8.4X20X1.5	FLAT WASHER Ø 8.4X20X1.5	1	1	1								
	12040566	CONTRATUERCA H 1/4"	COUNTERNUT H 1/4"	1	1	1								
8	12022001	SOPORTE TERMOS VAPOR	THERMOSTAT SUPPORT	2	2	2								
	12023499	TUERCA M.10x1 EGO 00.00600.075	NUT M.10x1 EGO 00.00600.075	2	2	2								
9	12024591	TERMOSTATO LIMITADOR 10/21	LIMITER THERMOSTAT10/21	1	1	1								
10	12024884	TERMOSTATO LIMITADOR CORTE	THERMOSTAT LIMITER	_	1	1								
11	12024011	CONTACTOR 230 V. 50-60 HZ	230 V. 50-60 HZ CONTACTOR	1	1	1								
12	12025158	BORNAS PORTA FUSIBLES	FUSE HOLDER TERMINAL	2	_	_								
S/Nº	12024152	FUSIBLE 10A Ø5MM 20X5	10A Ø5MM 20X5 FUSE	2	_	_								
12	12040888	BORNAS PORTAFUSIBLES 15A 4	FUSE HOLDER TERMINAL 15A	_	2	2								
S/Nº	12017280	FUSIBLE 15A Ø5MM 20X5	15A Ø5MM 20X5 FUSE	_	2	2								
	12024743	BORNA TIERRA 10 WPE-10103.O	EARTH TERMINAL10 WPE-10103.O	1	1	1								
	12024199	TOPE FINAL BORNA 10mm2 UL	FINAL STOP TERMINAL UL 10	1	1	1								

MOD.	HORNOS / OVEN	ZONA / ZONE	CUADRO ELECTRICO / ELECTRIC PANEL	PLANO DIAGRAM	C-3096

ITEM	CODIGO REFERENCE	DENOMINACION	DENOMINATION	ACG-202	AG-202	APG-202						ELIMINADO ELIMINATED	INTRODUCID. INTRODUCED	NOTAS
13	12024106	VENTILADOR 230V AC 1N 50/60Hz 3	FAN 230V AC 1N 50/60Hz 36KW	2	2	2								
14	12024790	PROTECCI. VENTILADOR RM-155	FAN PROTECTION RM-155	1	1	1								
	12009882	ARANDELA ABANICO A6 A.304	FAN SHAPED WASHER A.6	1	1	1								
	12009987	ARANDELA A4	FLAT WASHER A.4	6	6	6								
	12009928	ARANDELA ABANICO A4 A.304	FAN SHAPED WASHER A.4	6	6	6								
15	12009966	PRENSA ESTOPAS	STUFFING BOX	1	1	1								
	12010121	CONTRATUERCA (GAES)790.1300.0	COUNTERNUT (GAES) 790.1300.0	1	1	1								
	12010046	JUNTA GOMA (GAES)	RUBBER BOARD (GAES)	1	1	1								
16	12039678	CONJUN.TERMOPAR VAPOR Ø4	STEAM THERMOCOUP. UNIT Ø4	_	_	1								
16	12039678	CONJUN.TERMOPAR VAPOR Ø4	STEAM THERMOCOUP. UNIT Ø4	1	1	_						01.12.12		
16	12047675	CONJUN.TERMOPAR VAPOR L625	STEAM THERMOCO. UNIT L625	1	1	_							01.12.12	
17	12043409	BICONO CIERRE SONDA Ø4	PROBE CLOSING BICONE Ø4	1	1	1								
18	12041049	RACORD CIERRE SONDA Ø 4	PROBE CLOSING ADAPTOR Ø 4	1	1	1								
19	12024173	TRANSFORMADOR 12-0-12-0,24-0	TRANSFORMER 12-0-12-0,24-0	1	1	1								

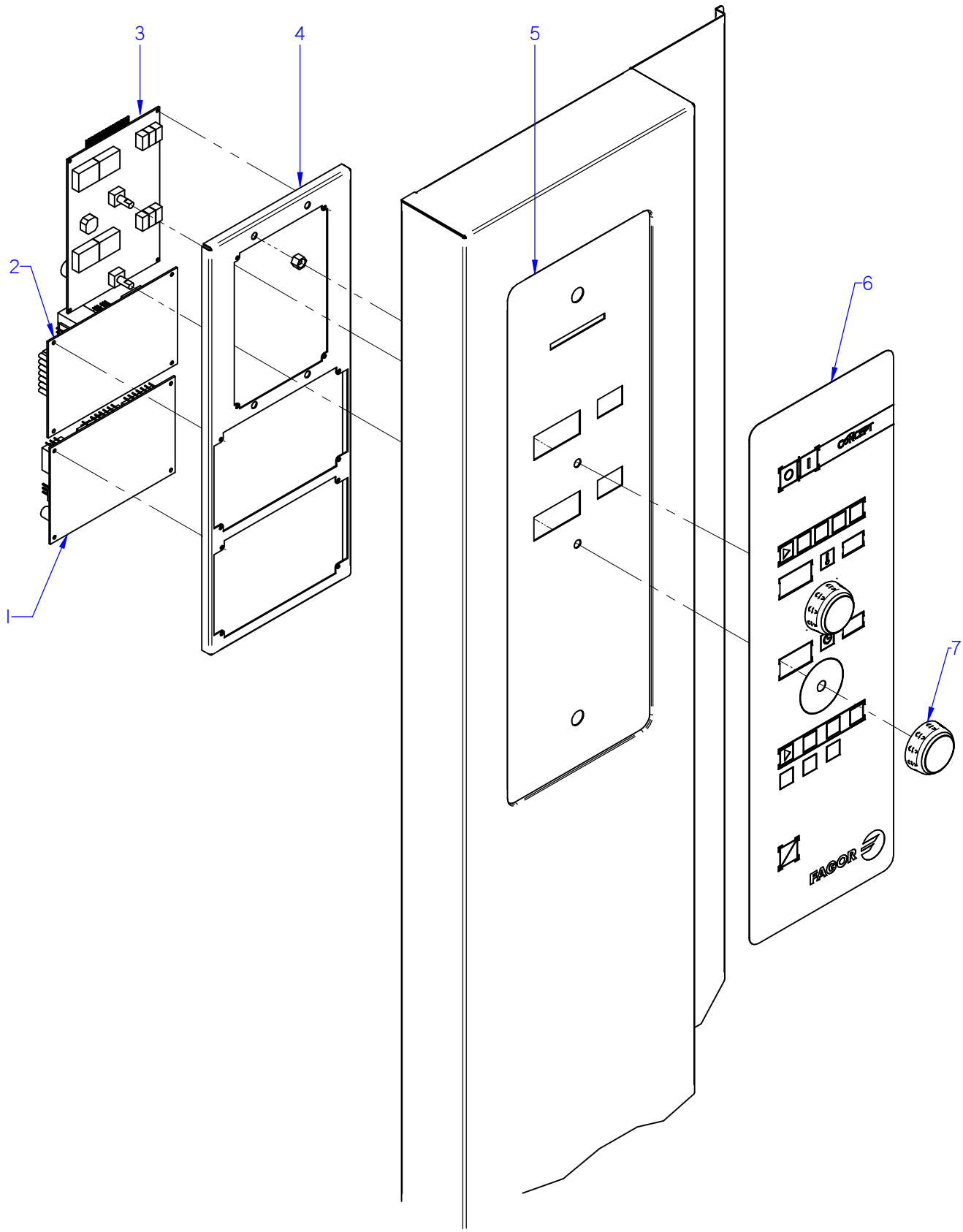

ITEM MARCADO EN COLOR = REPUESTO RECOMENDADO
COLOURED ITEM = RECOMMENDED SPARE PART

Nº plano / N º plane	Firma	Fecha / Date	Denominación / Denomination: PORTAMANDOS / CONTROL HOLDER	Lamina / Sheet	
C-3097		2012-09	HORNOS ACG-202	12	Fagor Industrial S.Coop. Oñate FAGOR

MOD.	HORNOS / OVEN	ZONA / ZONE	CONJUNTO ELECTRICO PORTAMANDOS / CONTROL HOLDER ELECTRIC UNIT	PLANO DIAGRAM	C-3097

ITEM	CODIGO REFERENCE	DENOMINACION	DENOMINATION	ACG-202								ELIMINADO ELIMINATED	INTRODUCID. INTRODUCED	NOTAS
1	12046673	CONTROL TARJETA GAS	GAS CONTROL BOARD	1										
2	12046659	CONTROL TARJETA CAM.12V AC .	CARD CONTROL 12V AC 50/60Hz	1										
3	12046671	VISUALIZADOR 12V AC 50/60Hz 12D	12V AC 50/60Hz 12D DISPLAY	1										
4	12043668	SOPORTE PROGRA. CONCEPT ADV.	CIRCUIT SUPPORT CONCEPT AD	1										
5	12093219	FRENTE PORTAM. CONCEPT	CONTROL PANEL FRONT CONC.	1									01.10.13	
S/Nº	12041815	JUNTA PORTAMANDOS ADV PLUS	CONTROL PANEL SEAL ADV PLUS	1									01.10.13	
6	12044176	SERIGRAFIA ADV CONCEPT GAS	SERIGRAPHY ADV CONCEPT G	1										
7	12046201	BOTON CONCEPT ADV	CONTROL BUTTON CONC. ADV	2										

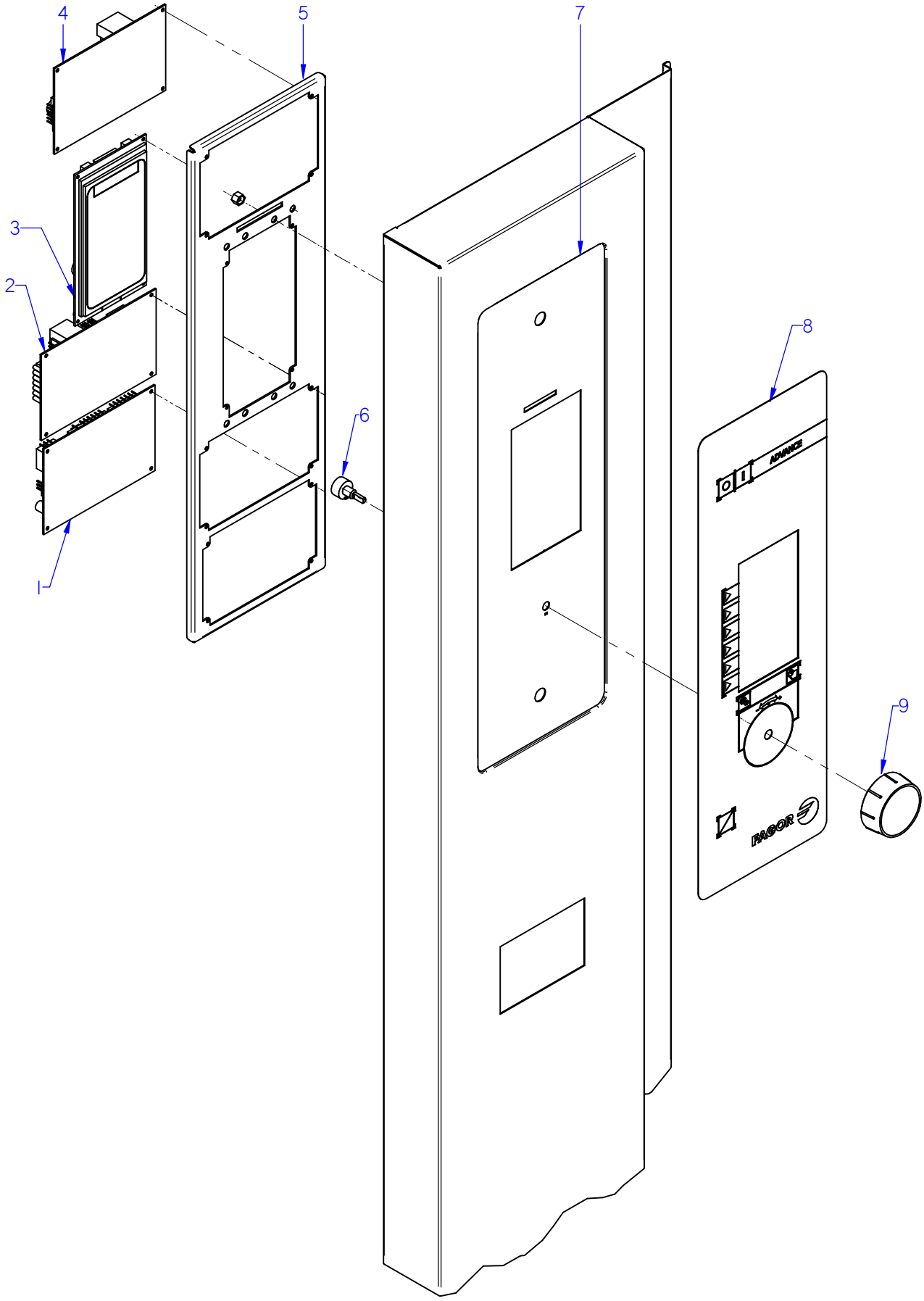

ITEM MARCADO EN COLOR = REPUESTO RECOMENDADO
COLOURED ITEM = RECOMMENDED SPARE PART

Nº plano / N º plane	Firma	Fecha / Date	Denominación / Denomination: PORTAMANDOS / CONTROL HOLDER	Lamina / Sheet	
C-3098		2012-09	HORNOS AG-202	13	Fagor Industrial S.Coop. FAGOR Oñate

MOD.	HORNOS / OVEN	ZONA / ZONE	CONJUNTO ELECTRICO PORTAMANDOS / CONTROL HOLDER ELECTRIC UNIT	PLANO DIAGRAM	C-3098

ITEM	CODIGO REFERENCE	DENOMINACION	DENOMINATION	AG-202								ELIMINADO ELIMINATED	INTRODUCID. INTRODUCED	NOTAS
1	12046673	CONTROL TARJETA GAS	GAS CONTROL BOARD	1										
2	12046659	CONTROL TARJETA CAM.12V AC .	CARD CONTROL 12V AC 50/60Hz	1										
3	12046672	VISUALIZADOR 12V AC 50/60Hz 32 D	12V AC 50/60Hz 32 D DISPLAY	1										
4	12046670	CONTROL TARJETA CALD. 12V AC 50/6	CARD CONTROL 12V AC 50/60Hz	1										
5	12039536	SOPORTE CIRCUITOS ADVANCE	CIRCUIT SUPPORT ADVANCE	1										
	12009944	ARANDELA A5	FLAT WASHER A.5	4										
	12010281	TUERCA EXAGONAL AUT M5 H. ZI.	HEXAGONAL NUT M5 H. ZINC,	4										
6	12043405	ENCODER GAMA ADVANCE	ADVANCE RANGE ENCODER	1										
7	12093236	FRENTE PORTAM. AE-AG COMP.	CONTROL PANEL FRONT AE-AG	1									01.10.13	
S/Nº	12041815	JUNTA PORTAMANDOS ADV PLUS	CONTROL PANEL SEAL ADV PLUS	1									01.10.13	
8	12044139	SERIGRAFIA ADVANCE	ADVANCE SERIGRAPHY	1										
9	12044074	BOTON DE MANDO ADV	ADV CONTROL BUTTON	1										

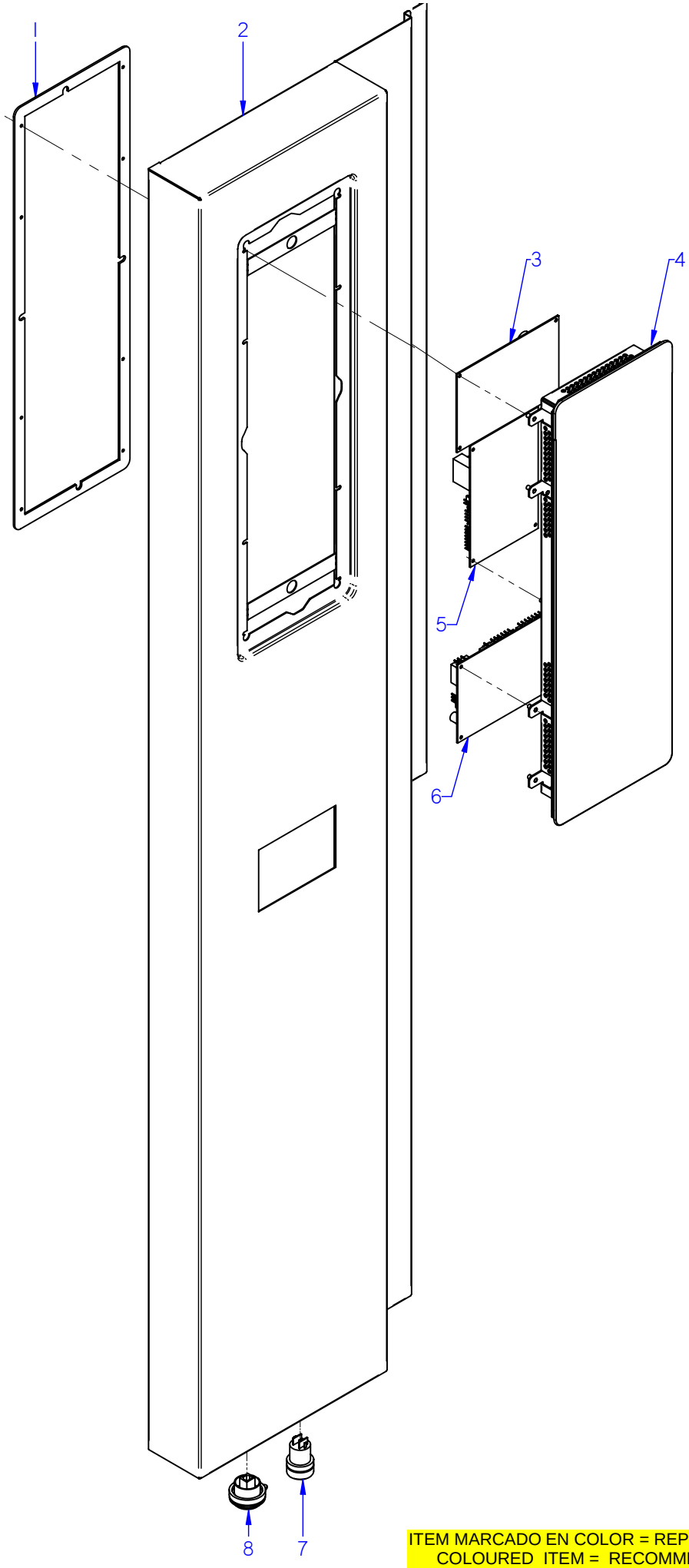

ITEM MARCADO EN COLOR = REPUESTO RECOMENDADO
COLOURED ITEM = RECOMMENDED SPARE PART

Nº plano / N º plane	Firma	Fecha / Date	Denominación / Denomination: PORTAMANDOS / CONTROL HOLDER	Lamina / Sheet	
C-3099		2012-09	HORNOS APG-202	14	Fagor Industrial S.Coop. FAGOR Oñate

MOD.	HORNOS / OVEN	ZONA / ZONE	CONJUNTO ELECTRICO PORTAMANDOS / CONTROL HOLDER ELECTRIC UNIT	PLANO DIAGRAM	C-3099

ITEM	CODIGO REFERENCE	DENOMINACION	DENOMINATION	APG-202								ELIMINADO ELIMINATED	INTRODUCID. INTRODUCED	NOTAS
1	12041815	JUNTA PORTAMANDOS ADV PLUS	CONTROL PANEL SEAL ADV PLUS	1										
	12010289	TUERCA AUTOB. M3 DIN985	SELF-LOCK NUT M3 DIN985	6										
	12010288	CLIP SUJECIÓN RÁPIDA Ø 4	RAPID CONNECT CLIP Ø 4	12										
2	12039418	PORTAMANDOS APG 202	CONTROL PANEL APG 202	1								28.03.14		
2	12097624	MOD PORTAMANDO 202 ADV PL.	CONTROL PANEL 202 ADV PLUS	1									28.03.14	
3	12046670	CONTROL TARJETA CALD. 12V AC 50/6	CARD CONTROL 12V AC 50/60Hz	1										
4	12046579	PLAT ADV PLUS CON SOFTWARE	ADV PLUS SOFTWARE PLATF.	1								25.05.15		
4	12121349	PLAT ADV PLUS CON SOFTWARE	ADV PLUS SOFTWARE PLATF.	1									25.05.15	
5	12046659	CONTROL TARJETA CAM.12V AC .	CARD CONTROL 12V AC 50/60Hz	1										
6	12046673	CONTROL TARJETA GAS	GAS CONTROL BOARD	1										
7	12023927	PULSADOR SERIE MICRO	MICRO SWITCH SERIES	1										
8	12024064	CONECTOR USB VISUAL PLUS	VISUAL PLUS USB CONNECTOR	1										
S/Nº	12023647	TAPA USB VISUAL PLUS	VISUAL PLUS USB COVER	1										

MOD.	HORNOS / OVEN	ZONA / ZONE	VARIOS / MISCELLANEOUS	PLANO DIAGRAM	

ITEM	CODIGO REFERENCE	DENOMINACION	DENOMINATION	ACG-202	AG-202	APG-202						ELIMINADO ELIMINATED	INTRODUCID. INTRODUCED	NOTAS
	12045296	MANUAL DE USUARIO ADV CONCE	USER MANUAL ADV CONCEPT	1	_	_								
	12044972	MANUAL INSTAL. CONCEPT GAS	INSTALLATI. MANUA CONC. GAS	1	_	_								
	12045298	MANUAL DE USUARIO ADVANCE	USER MANUAL ADVANCE	_	1	_								
	12044973	MANUAL NSTALACION ADV GAS	INSTALLATI. MANUAL ADV GAS	_	1	_								
	12045299	MANUAL DE USUARIO ADV PLUS	USER MANUAL ADV PLUS	_	_	1								
	12044974	MANUAL INSTAL. ADV PLUS GAS	INST. MANUAL ADV PLUS GAS	_	_	1								
	12039676	ESQUE. TEORICO ACG, AG, APG	THEO. DIAGRAM ACG, AG, APG	1	1	1								
	12039293	PLANO MONTAJE ACG, AG, APG	ASSEMBLY PLAN ACG, AG, APG	1	1	1								
	12044393	INSTAL. ELECTRICA ACG 201, 202	ELEC. INSTALL. ACG 201, 202	1	_	_								
	12039472	INSTAL.ELECTRICA. APG 202, 201	ELEC. INSTA. APG 202, 201	_	1	1								
	12024575	CABLEADO LUZ INTERIOR 20-21	INTERIOR LIGHT WIRING 20-21	1	1	1								
	12024453	CABL. DETEC-LLAMA-CAM. 20-21	FLAME DETECT. CAMERA WIR. 2	1	1	1								
	12024399	CABL. DETEC-LLAMA-CAM. 10-21	FLAME DETECT. CAMERA WIR. 2	1	1	1								
	12008032	CABLEADO TIERRA CG9-41	EARTH WIRING CG9-41	1	1	1								
	12024655	CABLEADO VAR-SOPL HGV20-21	BLOWER DRIVE WIR. HGV20-21	1	1	1								
	12008929	CABLEADO VAR-SOPL HGC-20-21	BLOWER DRIVE WIR. HGC-20-21	1	1	1								
	12023696	CABLEADO BMF	WIRING BMF	1	1	1								
	12040567	CABLEADO LAVADO 201-102-202	WIRING CABLE 201-102-202	_	_	1								
	12008976	CABLEADO PULSADOR RESET	RESET BUTTON WIRING	_	_	1								
	12023775	CABLE USB VISUAL PLUS 1,5M	VISUAL PLUS USB CABLE 1,5M	_	_	1								
	12009257	CABLEA. TRANSFORMADOR TFT	WIRING TRANSFORMER TFT	_	_	1								
	12009277	CD HACCP VISUAL COMPLETO	HACCP CD COMPLETE VISUAL	_	_	1								
	12022177	LEYENDA HORNOS	LEGEND OVENS	1	1	1								

MOD.	HORNOS / OVEN	ZONA / ZONE	REPUESTOS RECOMENDADOS RECOMMENDED SPARE PART	PLANO DIAGRAM	

ITEM	CODIGO REFERENCE	DENOMINACION	DENOMINATION	ACG-202	AG-202	APG-202						ELIMINADO ELIMINATED	INTRODUCID. INTRODUCED	NOTAS
23	**12094579**	**KIT PUERTA 202 CIERRE UNICO**	**SINGLE LOCK DOOR 202 KIT**	**1**	**1**	**1**								C-3087-14
1	**12039272**	**KIT CRISTAL INTER. 202**	**202 INNER GLASS KIT**	**1**	**1**	**1**								C-3087-14
8	12039312	BISAGRA SUPERIOR	UPPER HINGE	1	1	1								C-3087-14
12	12044773	ASA ADVANCE	ADVANCE HANDLE	1	1	1								C-3087-14
13	12047967	BASE BISAGRA INFERIOR 6 DIEN	LOWER HINGE BASE	1	1	1								C-3087-14
16	12024560	INTERRUPTOR MAGNETICO AC	MAGNETIC SWITCH AC	1	1	1								C-3087-14
21	12039298	JUNTA PUERTA 202	DOOR JOINT 202	1	1	1								C-3087-14
22	12039307	JUNTA CIERRE INFERIOR 202	LOWER LOCK JOINT 202	1	1	1								C-3087-14
1	12024325	MOTOR 230V AC 3N650KW 1450RPM	MOTOR 230V AC 3N650KW 1450	2	2	2								C-3090
4	12024510	RETEN 17X28X7V	RETAINER 28x17x7	4	4	4								C-3090
5	12010122	ANILLO DE SEGURIDAD Ø 28X1.2	SAFETY RING 28x1,2	2	2	2								C-3090
11	12025193	INTERRUPTOR PUERTA	DOOR SWITCH	2	2	2								C-3091
12	12024638	MOTOR CHIMENEA	FLUEPIPE MOTOR	1	1	1								C-3091
14	12024122	TUBO FLEXIBLE Ø53X360	FLEXIBLE TUBE Ø53X360	1	1	1								C-3091
1	12025161	ELECTRO. 230VAC 50/60Hz 1VIA	SOLENOID VALVE 230VAC 1 V	1	_	_								C-3092
1	12115418	ELECTR. 230V AC 50/60Hz 3 VIAS A	SOLENOID 230V AC 50/60Hz 3 V	_	1	1								C-3092
5	12039546	MOTOBOMBA 230V AC 1N 50/60Hz	PUMP 230V AC 50/60Hz 30W 1N	_	1	1								C-3092
11	12040977	DUCHA	SHOWER	_	1	1								C-3092
12	12025161	ELECTROVALV. 230VAC 50/60Hz 1V	SOLENOID VALVE 230VAC 1 V	_	1	1								C-3092
14	12024754	MOTORREDUCTOR 230V AC 1N	MOTOREDUCER 230V AC 1N	_	_	1								C-3092
18	12025193	INTERRUPTOR PUERTA	DOOR SWITCH	_	_	2								C-3092
21	12024796	CUERPO VALVULA COMPLETO	COMPLETE VALVE BODY	_	_	1								C-3092
22	12024425	GOMA VALVULA BOMBA	PUMP VALVE RUBBER	_	_	1								C-3092
23	12024782	MOTOBOMBA 230V AC 1N 50Hz	MOTOR 230V AC 1N 50Hz 74,6	_	_	1								C-3092
24	12047404	MOD CONJUNTO DESAGUE ADV	ADV DRAIN SET MODEL	1	1	1								C-3092
1	12046110	KIT GENERADOR VAPOR 202	STEAM GENERATOR 202 KIT	_	1	1								C-3093
2	12044832	CODO Ø 73	ELBOW Ø 73	_	1	1								C-3093
3	12023573	ELECTRODO ALTO	HIGH LEVEL ELECTRODE	_	1	1								C-3093
4	12023574	ELECTRODO BAJO	LOW LEVEL ELECTRODE	_	1	1								C-3093
5	12023575	ELECTRODO DE MASA	EARTH ELECTRODE	_	1	1								C-3093
9	12115418	ELECTR. 230V AC 50/60Hz 3 VIAS A	SOLENOID 230V AC 50/60Hz 3 V	_	1	1								C-3093

MOD.	HORNOS / OVEN	ZONA / ZONE	REPUESTOS RECOMENDADOS RECOMMENDED SPARE PART	PLANO DIAGRAM	

ITEM	CODIGO REFERENCE	DENOMINACION	DENOMINATION	ACG-202	AG-202	APG-202						ELIMINADO ELIMINATED	INTRODUCID. INTRODUCED	NOTAS
10	12039649	TUBO DESAGÜE GENERADOR	DRAIN TUBE GENERATOR	_	1	1								C-3093
11	12039546	MOTOBOMBA 230V AC 1N 50/60Hz	PUMP 230V AC 50/60Hz 30W 1N	_	1	1								C-3093
12	12023901	CONJUN. TERMOPAR VAPOR	STEAM THERMOCOUPLE UNIT	_	1	1								C-3093
1	12039544	CHISPA BRAHMA	BRAHMA SPARK	_	1	1								C-3094
2	12039427	QUEMADOR GENERADOR 202G	BURNER GENERATOR 202G	_	1	1								C-3094
4	12039373	VENTILADOR RG-148	RG-148 FAN	_	1	1								C-3094
8	12046364	VALVULA REGUL 50HZ ADV	ADV 50HZ VALVE CONTROLL.	_	1	1								C-3094
8	12046365	VALVULA REGUL 60HZ ADV	ADV 60HZ VALVE CONTROLL.	_	1	1								C-3094
9	12039440	CAJA CONTROL DBC 579	DBC CONTROL BOX 579	_	1	1								C-3094
15	12039430	BUJIA GENERADOR 202	PLUG GENERATOR 202	_	1	1								C-3094
16	12039431	DETECTOR GENERADOR 202	GENERATOR SENSOR 202	_	1	1								C-3094
5	12044607	SOPLANTE NRG 118 55kw	BLOWER NRG 118 55kw	1	1	1								C-3095
6	12039544	CHISPA BRAHMA	BRAHMA SPARK	1	1	1								C-3095
9	12039442	QUEMADOR CONVECCION 102	BURNER CONVECTION 102	1	1	1								C-3095
10	12039448	DETECTOR CONVECCION 1021	CONVECTION DETECTOR 1021	1	1	1								C-3095
11	12039447	BUJIA CONVECCION 1021	SPARK CONVECTION 1021	1	1	1								C-3095
16	12046364	VALVULA REGUL 50HZ ADV	ADV 50HZ VALVE CONTROLL.	2	2	2								C-3095
16	12046365	VALVULA REGUL 60HZ ADV	ADV 60HZ VALVE CONTROLL.	2	2	2								C-3095
17	12039440	CAJA CONTROL DBC 579	DBC CONTROL BOX 579	2	2	2								C-3095
25	12039448	DETECTOR CONVECCION 1021	CONVECTION DETECTOR 1021	1	1	1								C-3095
26	12039447	BUJIA CONVECCION 1021	SPARK CONVECTION 1021	1	1	1								C-3095
30	12044607	SOPLANTE NRG 118 55kw	BLOWER NRG 118 55kw	1	1	1								C-3095
33	12039544	CHISPA BRAHMA	BRAHMA SPARK	1	1	1								C-3095
34	12039442	QUEMADOR CONVECCION 102	BURNER CONVECTION 102	1	1	1								C-3095
1	12024642	CONJUN. TERMOPAR CAMARA (K)	CHAMBER THERMOCOUPLE UNIT (K)	1	1	1								C-3096
5	12024329	VARIADOR FRECUENCIA SIE 0,37KW	FREQUENCY VARIATOR SIE 0.37	2	2	2						26.02.13		C-3096
5	12048798	REP VARIADOR REGULADO ADV	REGULATED VARIATOR ADV	2	2	2							26.02.13	C-3096
7	12039548	SONDA PINCHO ADVANCE	ADVANCE PROBE PINCHO	1	1	1								C-3096
9	12024591	TERMOSTATO LIMITADOR 10/21	LIMITER THERMOSTAT10/21	1	1	1								C-3096
10	12024884	TERMOSTATO LIMITADOR CORTE	THERMOSTAT LIMITER	_	1	1								C-3096
11	12024011	CONTACTOR 230 V. 50-60 HZ	230 V. 50-60 HZ CONTACTOR	1	1	1								C-3096

MOD.	HORNOS / OVEN	ZONA / ZONE	REPUESTOS RECOMENDADOS RECOMMENDED SPARE PART	PLANO DIAGRAM	

ITEM	CODIGO REFERENCE	DENOMINACION	DENOMINATION	ACG-202	AG-202	APG-202						ELIMINADO ELIMINATED	INTRODUCID. INTRODUCED	NOTAS
12	12025158	BORNAS PORTA FUSIBLES	FUSE HOLDER TERMINAL	2	_	_								C-3096
13	12024106	VENTILADOR 230V AC 1N 50/60Hz 36KW	FAN 230V AC 1N 50/60Hz 36KW	2	2	2								C-3096
16	12039678	CONJUN.TERMOPAR VAPOR Ø4	STEAM THERMOCOUP. UNIT Ø4	_	_	1								C-3096
16	12039678	CONJUN.TERMOPAR VAPOR Ø4	STEAM THERMOCOUP. UNIT Ø4	1	1	_						01.12.12		C-3096
16	12047675	CONJUN.TERMOPAR VAPOR L625	STEAM THERMOCO. UNIT L625	1	1	_							01.12.12	C-3096
17	12043409	BICONO CIERRE SONDA Ø4	PROBE CLOSING BICONE Ø4	1	1	1								C-3096
19	12024173	TRANSFORMADOR 12-0-12-0,24-0	TRANSFORMER 12-0-12-0,24-0	1	1	1								C-3096
1	12046673	CONTROL TARJETA GAS	GAS CONTROL BOARD	1	_	_								C-3097
2	12046659	CONTROL TARJETA CAM.12V AC .	CARD CONTROL 12V AC 50/60Hz	1	_	_								C-3097
3	12046671	VISUALIZADOR 12V AC 50/60Hz 12D	12V AC 50/60Hz 12D DISPLAY	1	_	_								C-3097
6	12044176	SERIGRAFIA ADV CONCEPT GAS	SERIGRAPHY ADV CONCEPT G	1	_	_								C-3097
7	12046201	BOTON CONCEPT ADV	CONTROL BUTTON CONC. ADV	2	_	_								C-3097
1	12046673	CONTROL TARJETA GAS	GAS CONTROL BOARD	_	1	_								C-3098
2	12046659	CONTROL TARJETA CAM.12V AC .	CARD CONTROL 12V AC 50/60Hz	_	1	_								C-3098
3	12046672	VISUALIZADOR 12V AC 50/60Hz 32 D	12V AC 50/60Hz 32 D DISPLAY	_	1	_								C-3098
4	12046670	CONTROL TARJETA CALD. 12V AC 50/6	CARD CONTROL 12V AC 50/60Hz	_	1	_								C-3098
6	12043405	ENCODER GAMA ADVANCE	ADVANCE RANGE ENCODER	_	1	_								C-3098
8	12044139	SERIGRAFIA ADVANCE	ADVANCE SERIGRAPHY	_	1	_								C-3098
1	12041815	JUNTA PORTAMANDOS ADV PLUS	CONTROL PANEL SEAL ADV PLUS	_	_	1								C-3099
3	12046670	CONTROL TARJETA CALD. 12V AC 50/6	CARD CONTROL 12V AC 50/60Hz	_	_	1								C-3099
4	12121349	PLAT ADV PLUS CON SOFTWARE	ADV PLUS SOFTWARE PLATF.	_	_	1								C-3099
5	12046659	CONTROL TARJETA CAM.12V AC .	CARD CONTROL 12V AC 50/60Hz	_	_	1								C-3099
6	12046673	CONTROL TARJETA GAS	GAS CONTROL BOARD	_	_	1								C-3099
7	12023927	PULSADOR SERIE MICRO	MICRO SWITCH SERIES	_	_	1								C-3099
8	12024064	CONECTOR USB VISUAL PLUS	VISUAL PLUS USB CONNECTOR	_	_	1								C-3099
S/Nº	12023647	TAPA USB VISUAL PLUS	VISUAL PLUS USB COVER	_	_	1								C-3099
8	12039312	BISAGRA SUPERIOR	UPPER HINGE	1	1	1								C-3087

SIT

APG 06 1, APG 10 1, APG 20 1,
APG 10 2, APG 20 2

AG 06 1, AG 10 1, AG 20 1,
AG 10 2, AG 20 2

ACG 06 1, ACG 10 1, ACG 20 1,
ACG 10 2, ACG 20 2

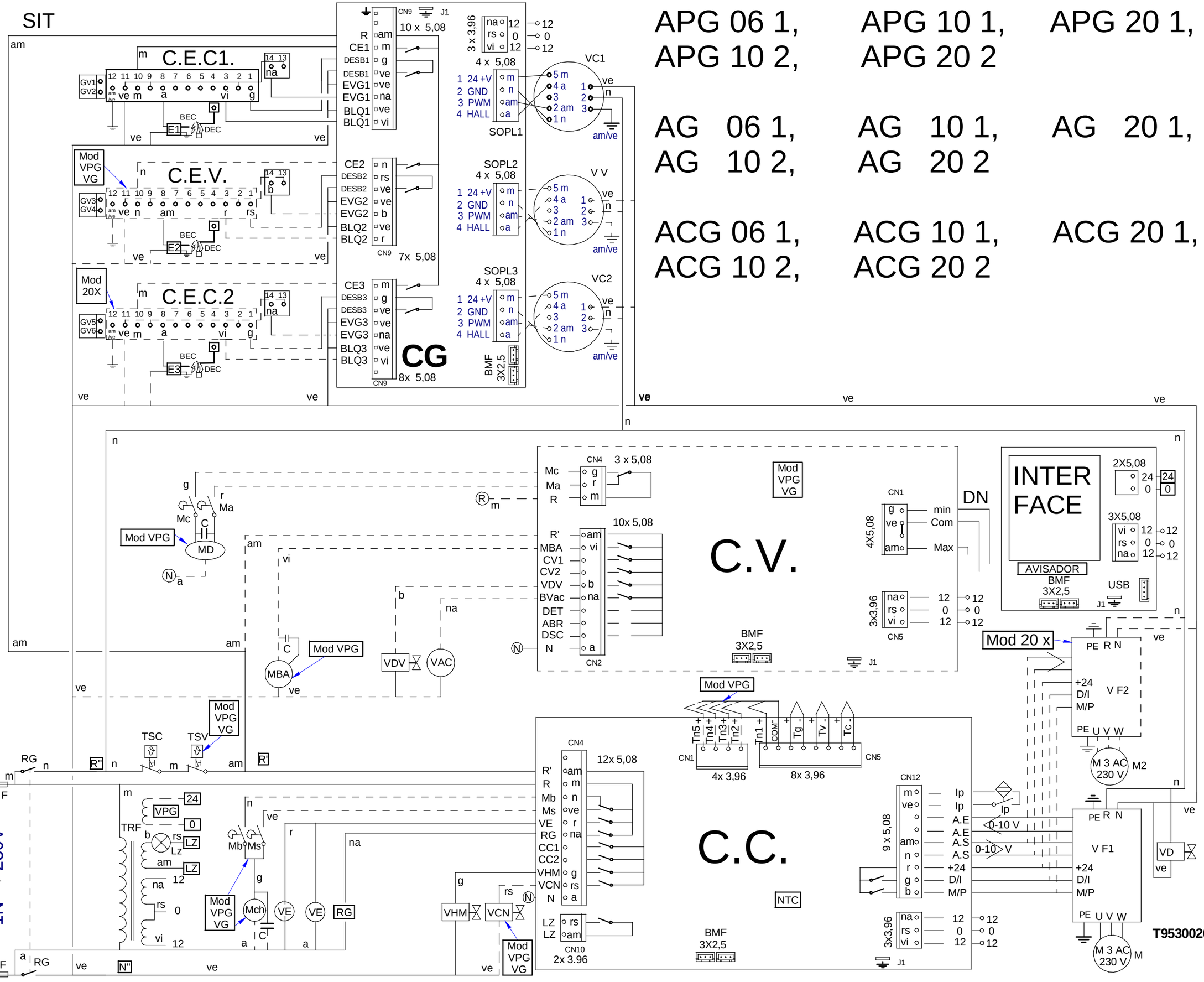

Variador de Siemens.
Pulsar [P] paraentrar o salir de los Parmetros.
Nota. Si se modifica algunvalor del nivel Basico, hay que volver a grabar el nivel 3.

P0010 = 1 Para inicio programación. (Nivel Basico)
P0100 = 0 (Valor en KW 50Hz Europa)
P0304 = 230 (Vn V)
P0305 = 1,8 (Inb A)
P0307 = 0,37 (Pn KW)
P0310 = 50 (Fn Hz)
P0311 = 1400 (rpm Nom)
P0700 = 2 (Terminal)
P1000 = 2 (Consigna ADC)
P1080 = 25 (F.min Hz)
P1082 = 50 (F.Max Hz)
P1120 = 5" (Ton ")
P1121 = 5" (Toff ")
P3900 = 1 (Fin de la programación y grabación de datos.)
P0003 =3 (Nivel 3 Experto).
P0005 = 27 (Visualizacion = Corriente de salida)
P0611 = 16000 (Tiempo de activación de sobrecarga Seg.)
P0640 = 150 (Sobrecarga de corriente en %)
P1210 = 6 (Rearranque automático)
P1300 = 2 (Modo Parábola, Ventilador)
P1800 = 16 (F.Base KHz) (Cuanto mas alto: - ruido acústico)
P2000 = 50 (F.Refencia de la consigna Hz)

COPIAR PARAMETROS DESDE EL BOP AL VARIADOR

P0003 = 3
P0010= 30
P0803 = 1

SOLO USAR CUANDO EL BOP SE HA BORRADO

P0802 desde Variador a BOP

		10 2	20 2
		VG	VPG	VG
Genrl	1	T643007000	
Soplt	2	T303058	T493011
Ig.C	3	T303034	T493012
Dll.C	4	T303035	T493013
Ig.V	5	T303036000	
Dll.V	6	T303037	T493014
BMF	7	T903006000	
VF2	8		T743002
Proln	9	----------	
Lz	10	T303031	T493010
Lav	11	T333009	
Rst	12	T523004	
TFT	13	T853003	
USB	14	T723008	
Esquema	-	T643005000	
Leyenda	-	T303042000	
Ind.Comp	-	T303043000	

-	Plano Montaje HGV-HGP 380V	-	-	T953003000	-
Zk./Nº	Pieza	Cant.	Materiala/Material	Klas. zk/Nº Clas.	Gainazal akabera/Tratamiento
Zk./Nº	Aldaketa/Modificaciones		Nork proposatua/Propuesta de	Data/Fecha	Perdoi orokorrak Tolerancias generales
1	Modificar distanciade las canaletas de 150 a175 mm.		jeskibel	2007-07-05	< 5 ± 0.2 / 50 ÷ 100 ± 0.8
-	-		-	-	5 ÷ 25 ± 0.4 / >100± 1
-	-		-	-	25 ÷ 50 ± 0.6 / α ± 1
-	-		-	-	
-	-		-	-	

	Sinadura/Firma	Data/Fecha
Marraztua/Dibujado	M.Maillo	2011-07-05
Proiektatua/Proyectado	M.Maillo	2011-07-05
Egiaztatua/Comprobado	LIBURETAGOIENA	2011-07-05
Eskala/Escala	-	

FAGOR
Fagor Industrial,Koop.Elk, Mugatua

HORNOS

Plano hau ezin daiteke erabili, ez berriztatu, gure baimenik gabe.

Gainazal perdoia Mecanizado superficial —

Plano Zk./Plano Nº HD -13183

- Zk. ord. du
- Zk.gaitik ord.

	ESPAÑOL	FRANÇAIS	ENGLISH	DEUTSCH	ITALIANO
BEC	Bujía Encendido Cámara	Bougie Allumage Chambre	Chamber Spark Plug	Zündkerze Einschalten Garraum	Candela di Accensione Camera
BEV	Bujía Encendido Caldera	Bougie Allumage Chaudière	Boiler Spark Plug	Zündkerze Einschalten Boile	Candela di Accensione Caldaia
C.C.	Control Camara	Contrôle Chambre	Chamber Control	Steuerung Garraum	Controllo Camera
C.E.C	Control Combustión Cámara	Contrôle Combustion Chambre	Chamber Combustion Control	Steuerung Verbrennung Garraum	Controllo Combustione Camera
C.E.V	Control Combustión Caldera	Contrôle Combustion Chaudière	Boiler Combustion Control	Steuerung Verbrennung Boiler	Controllo Combustione Caldaia
C.G.	Control Gas	Contrôle Gaz	Control Gas	Steuern Sie Gas	Controlli il gas
C.V.	Control Caldera	Contrôle Chaudière	Boiler Control	Steuerung Boiler	Controllo Caldaia
CC1, CC2	Contactor Resistencia Cámara	Contacteur Élément Chauffant Chambre	Chamber Heating Element Contactor	Schütz Heizwiderstand Garraum	Contattore Resistenza Camera
CK1, CK2	Contactor General Calentamiento	Relais Élément Chauffant	Heating Element Relay	Relais Heizwiderstand	Relè Resistenza
CV1, CV2	Contactor Resistencias Caldera	Contacteur Élément Chauffant Chaudière	Boiler Heating Element Contactor	Schütz Heizwiderstand Boiler	Contattore Resistenza Caldaia
DEC	Detector Llama Cámara	Détecteur Flamme Chambre	Chamber Flame Detector	Flammendetektor Garraum	Rilevatore di Fiamma Camera
DEV	Detector Llama Caldera	Détecteur Flamme Chaudière	Boiler Flame Detector	Flammendetektor Boiler	Rilevatore di Fiamma Caldaia
DN	Detector Nivel Caldera	Détecteur Niveau Chaudière	Boiler Level Detector	Pegeldetektor Boiler	Rilevatore Livello Caldaia
F	Fusibles	Fusibles	Fuses	Sicherungen	Fusibili
FI	Filtro Interferencias	Filtre Interférences	Interference Filter	Störungsfilter	Filtro Interferenze
FM	Térmico Motor	Thermique Moteur	Thermal Engine	Thermoschalter Motor	Termico Motore
GV1, GV2	Electro válvula Gas Cámara	Électrovanne Gaz Chambre	Chamber Gas Solenoid Valve	Elektroventil Gas Garraum	Elettrovalvola Gas Camera
GV3, GV4	Electro válvula Gas Caldera	Électrovanne Gaz Chaudière	Boiler Gas Solenoid Valve	Elektroventil Gas Boiler	Elettrovalvola Gas Caldaia
Ip	Interruptor Seguridad Puerta	Interrupteur Sécurité Porte	Door Safety Switch	Sicherheitsschalter Tür	Iterruttore Sicurezza Porta
Lz	Luz Interior	Éclairage Intérieur	Inner Light	Innenbeleuchtung	Luce Interna
M, M2	Motor Turbina	Moteur Turbine	Turbine Engine	Motor Turbine	Motore Turbina
Ma	Interruptor Micro Abierto	Microrupteur Ouvert	Open Microswitch	Mikroschalter Geöffnet	Iterruttore Micro Aperto
Mb	Interruptor Micro Bajada	Microrupteur Descente	Drop Microswitch	Mikroschalter Senken	Iterruttore Micro Discesa
Mc	Interruptor Micro Cerrado	Microrupteur Fermé	Closed Microswitch	Mikroschalter Geschlossen	Iterruttore Micro Chiuso
Mch	Motor Chimenea	Moteur Cheminée	Stack Engine	Motor Abluftkamin	Motore Canna
MD	Motor Desague	Moteur évacuation	Drain Engine	Motor Abfluss	Motore scolo
Ms	Interruptor Micro Subida	Microrupteur Montée	Rise Microswitch	Mikroschalter Heben	Iterruttore Micro Salita
PF	Potenciómetro Selector Funciones	Potentiomètre Sélecteur Fonctions	Functions Selector Potentiometer	Potentiometer Funktionswahlschalter	Potenziometro Selettore Funzioni
RC	Resistencias Cámara	Éléments Chauffants Chambre	Chamber Heating Element	Heizwiderstände Garraum	Resistenze Camere
RG	Rele General	Relais Général	Main Relay	Hauptrelais	Relè principale
RV	Resistencias Caldera	Éléments Chauffants Chaudière	Boiler Heating Element	Heizwiderstände Boiler	Resistenze Caldaia
Tc	Sonda Cámara	Sonde Chambre	Chamber Probe	Sonde Garraum	Sonda Camera
TCN	Termostato Condensación	Thermostat Condensation	Condensation Thermostat	Thermostat Kondensierung	Termostato Condensazione
Tg	Sonda Caldera	Sonde Chaudière	Boiler Probe	Sonde Boiler	Sonda Caldaia
Tn	Sonda Núcleo	Sonde Noyau	Core Probe	Kerntemperaturmessonde	Sonda Nucleo
TRF	Transformador	Transformateur	Transformer	Transformator	Trasformatore
TSC	Termostato Seguridad Cámara	Thermostat Sécurité Chambre	Chamber Safety Thermostat	Sicherheitsthermostat Garraum	Termostato Sicurezza Camera
TSV	Termostato Seguridad Caldera	Thermostat Sécurité Chaudière	Boiler Safety Thermostat	Sicherheitsthermostat Boiler	Termostato Sicurezza Caldaia
Tv	Sonda Vapor	Sonde Vapeur	Steam Probe	Sonde Dampf	Sonda Vapore
VAC	Bomba Vaciado	Pompe Vidange	Vacuum Pump	Ablasspumpe	Pompa scarico
MBA	Moto Bomba Aclarado	Pompe Rinçage	Rinsing Pump	Pumpe Ausspülen	Pompa Risciacquo
VC1, VC2	Ventilador Soplante Camara	Ventilateur Soufflant	Blowing Fan	Ventilator Gebläse	Ventilatore Soffiante
VCN	Electro válvula Condensación	Électrovanne Condensation	Condensation Solenoid Valve	Elektroventil Kondensierung	Elettrovalvola Condensazione
VDV	Electro válvula Llenado Caldera	Électrovanne Remplissage Chaudière	Chamber Filling Solenoid Valve	Elektroventil Füllung Boiler	Elettrovalvola di Riempimento Caldaia
VE	Ventilador Cuadro Eléctrico	Ventilateur Tableau Électrique	Fan Switchboard	Ventilator Elektrotafel	Ventilatore Quadro Elettrico
VF1,VF2	Variador de Frecuencia	Variateur Vitesse	Speed Variator	Geschwindigkeitsregler	Variatore di Velocità
VHM	Electro válvula Humidificador	Électrovanne Humidificateur	Humidifier Solenoid Valve	Elektroventil Befeuchtungsvorrichtung	Elettrovalvola Umidificatore
Vv	Ventilador Soplante Caldera	Ventilateur soufflement chaudière	Boiler Blowing Fan	Durchbrennenventilator zum Dampfkessel	Ventilatore Soffiante caldaia
	COLORES	**COULEURS**	**COLOUR**	**FARBEN**	**COLORE**
a	Azul	Bleu	Blue	Blau	Blu
am	Amarillo	Jaune	Yellow	Gelb	Giallo
am/ve	Amarillo/verde	Jaune / vert	Yellow / green	Gelb/grün	Giallo/verde
b	Blanco	Blanc	White	Weiß	Bianco
g	Gris	Gris	Grey	Grau	Grigio
m	Marrón	Marron	Brown	Braun	Marrone
n	Negro	Noir	Black	Schwarz	Nero
na	Naranja	Orange	Orange	Orange	Arancio
r	Rojo	Rouge	Red	Rot	Rosso
rs	Rosa	Rose	Pink	Rosa	Roseo
ve	Verde	Vert	Green	Grün	Verde
vi	Violeta	Violet	Purple	Violett	Viola
					T303042000