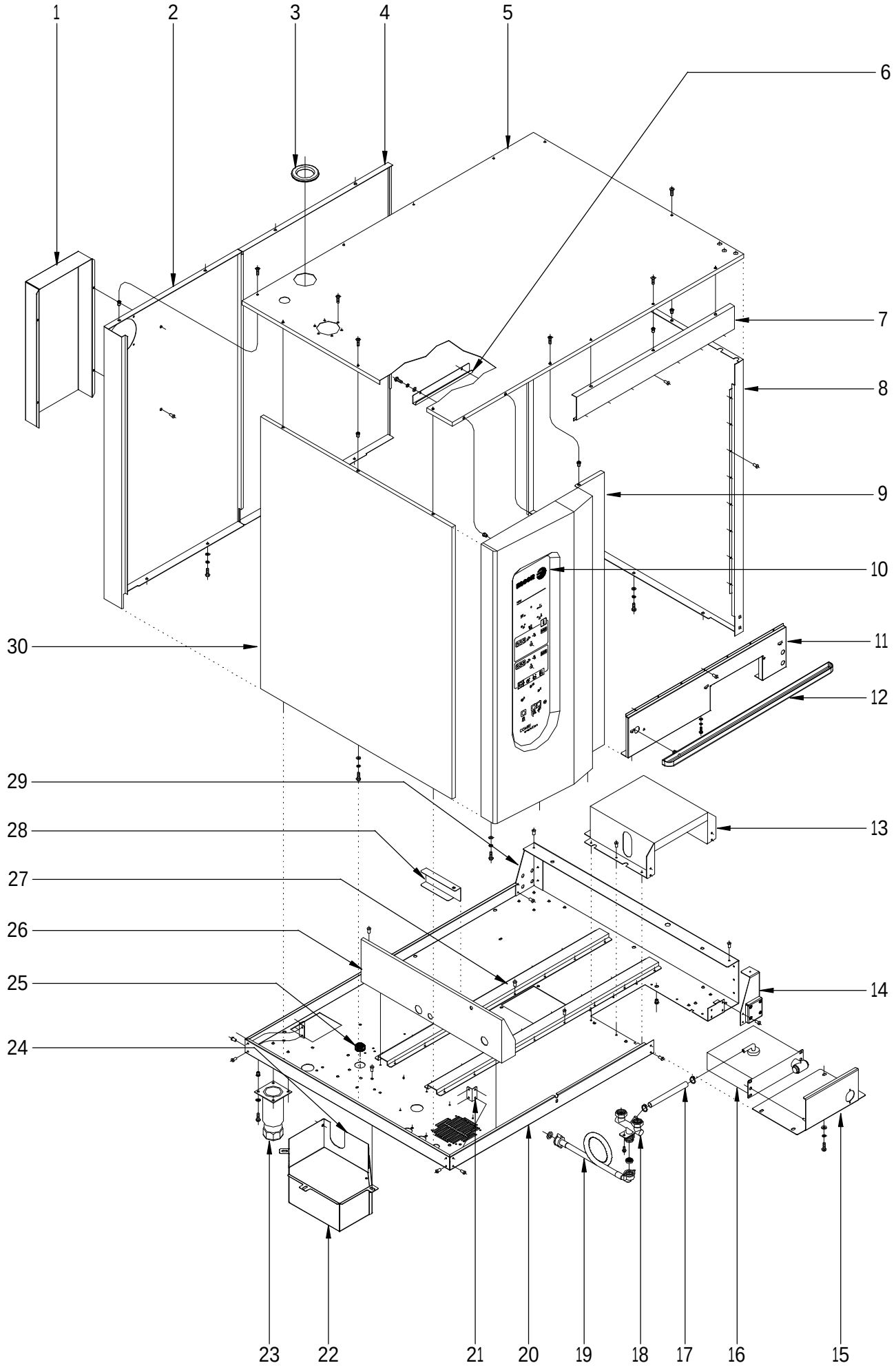

N plano	Firma	Fecha	Aparato	MUEBLE	Lamina	
C-1994		2008-04	HORNO HEP-10/21		1	Fagor Industrial S.Coop. FAGOR Oñate

MOD.	HORNOS	ZONA	MUEBLE	PLANO	C-1994

ITEM	CODIGO	DENOMINACION	TEXTO	HEP-10/21							NOTAS
1	T452814000	CHAPA SEPARACION IPX5 20/21	SEPARATION PLATE IPX5 20/21	1							
	Q412002000	REMACHE AVINOX Ø4x10mm	RIVET AVINOX Ø4x10mm	2							
2	T322812000	PANEL POST. EXT ELECT 10/21	REAR PANEL EXT ELECT 10/21	1							
3	R662813000	PASAMUROS CHIMENEA 101003361	FEED THROUGH FLUE PIPE 1010	1							
4	T302850000	PANEL POST EXT COMUN 10/21	REAR PANEL EXT. COMMON 10/2	1							
5	T322803000	PANEL SUPERIOR COMPLETO	COMPLETE UPPER PANEL	1							
	Q221342000	REMACHE EXAGONAL M5	HEXAGONAL RIVET M5	10							
	Q152004000	TORNILLO APLASTADO M5x13	FLAT HEAD SCREW M5X13	10							
6	T302834000	CANALETA PORTAMANDOS	CONTROL HOLDER PIPE	1							
	Q412005000	REMACHE TUBULAR 3.3X8.7	TUBULAR RIVET 3.3 X 8.7	30							
7	T302804000	PANEL ANTERIOR SUPERIOR	UPPER FRONT PANEL	1							
8	T302803000	PANEL EXTERIOR DCHO. 10/21	RIGHT EXT. PANEL 10/21	1							
9	T322815000	PANEL PORTAMANDOS COMPL. E	COMPL. CONTROL HOLDER P.	1							
10	T333001000	SERIGRAFIA HEP-10/11 10/21	SERIGRAPHY HEP-10/11 10/21	1							
11	T302854000	PANEL FRONTAL INFERIOR	LOWER FRONT PANEL	1							
	Q242030000	ARANDELA ABANICO A5 A.304	FAN WASHER A5 A.304	2							
	Q213131000	TUERCA SOMBRERETE M5	COWL NUT M5	2							
12	T302853000	RECOGEAGUAS DE PLASTICO	PLASTIC WATER COLLECTOR	1							
13	T302830000	ALOJAMIENTO DUCHA	SHOWER HOUSING	1							
14	T302836000	REFUERZO APOYO BASE COMPL.	BASE SUPPORT REINFORCEM.	1							
15	T322818000	CHAPA AMARRE DUCHA	SHOWER FASTENING PLATE	1							
	Q152004000	TORNILLO APLASTADO M5x13	FLAT HEAD SCREW M5X13	4							
	Q221343000	REMACHE EXAGONAL M6	HEXAGONAL RIVET M6	4							
	Q232040000	ARANDELA A6	WASHER A6	4							
	Q262040000	ARANDELA GROW. A6 A.304	WASHER GROW. A6 A.304	4							
	Q012042000	TORNILLO EXAGONAL M6X15	HEXAGONAL BOLT M6x15	4							
16	T452809000	DUCHA	SHOWER	1							
	Q221342000	REMACHE EXAGONAL M5	HEXAGONAL RIVET M5	4							
17	3676900000	TUBO GOMA NEGRA 17*10	BLACK RUBBER PIPE 17*10	1							
	Q901310000	ABRAZADERA ELAST. 16.8-17.7	ELAST. CLAMP 16.8-17.7	2							

MOD.	HORNOS	ZONA	MUEBLE	PLANO	C-1994

ITEM	CODIGO	DENOMINACION	TEXTO	HEP-10/21							NOTAS
18	T325063000	ENTRADA AGUA COMPLETA	COMPLETE WATER INLET	1							
	Q012021000	TORNILLO EXAGONAL M4X10	HEXAGONAL BOLT M4x10	2							
19	Z601114000	MANGUERA ENTRADA AGUA	WATER INTAKE HOSE	1							
	Z701132000	FILTRO DE JUNTA N-3	SEAL FILTER N-3	1							
	Q307031000	JUNTA TUBO 14X24X3	PIPE GASKET 14X24X3	2							
20	T330710000	BASE EXTERIOR DE HORNO	OVEN EXTERIOR BASE	1							
S/Nº	T332806000	TAPA INFERIOR BASE LAVADO	LOWER COVER WASHING BASE	1							
	Q012032000	TORNILLO EXAGONAL M5x15	HEXAGONAL BOLT M5x15	4							
	Q242030000	ARANDELA ABANICO A5 A.304	FAN WASHER A5 A.304	4							
	Q221342000	REMACHE EXAGONAL M5	HEXAGONAL RIVET M5	4							
21	T302837000	CANTONERA BASE	PROTECTOR BASE	4							
22	T330747000	CAJA CUBRE SISTEMA LIMPIEZA	CLEANING SYSTEM BOX	1							
	Q012032000	TORNILLO EXAGONAL M5x15	HEXAGONAL BOLT M5x15	3							
	Q242030000	ARANDELA ABANICO A5 A.304	FAN WASHER A5 A.304	3							
	Q221342000	REMACHE EXAGONAL M5	HEXAGONAL RIVET M5	3							
23	X260151000	PATA REGULABLE	ADJUSTABLE LEG	4							
	Q221342000	REMACHE EXAGONAL M5	HEXAGONAL RIVET M5	16							
	Q242030000	ARANDELA ABAN. A5 A.304	FAN WASHER. A5 A.304	16							
	Q012031000	TORNILLO EXAGONAL M5x10	HEXAGONAL BOLT M5x10	16							
24	T330748000	TAPA CAJA CUBRE SIST LAVADO	COVER WASHING SYSTEM BOX	1							
	Q032031000	TORNILLO ALOMADO M5X10	CURVED SCREW M5X10	3							
25	X723014000	PASAMUROS Ø 30	WALL BUSHING Ø 30	1							
26	T322808000	APOYO CUERPO HORNO	OVEN BODY SUPPORT	1							
27	T302818000	REFUERZO LONGITUDINAL BASE	REINFOR. LONGITUDINAL BASE	2							
28	T352803000	APOYO DESAGÜE	DRAIN SUPPORT	1							
29	T302816000	REFUERZO APOYO BASE POSTE.	REAR BASE SUPPORT REINFO.	1							
30	T302806000	PANEL EXTERIOR IZQUIERDO	LEFT EXTERIOR PANEL	1							
	Q221343000	REMACHE EXAGONAL M6	HEXAGONAL RIVET M6	14							
	Q232040000	ARANDELA A6	WASHER A6	14							
	Q262040000	ARANDELA GROW. A6 A.304	WASHER GROW. A6 A.304	14							
	Q012042000	TORNILLO EXAGONAL M6x15	HEXAGONAL BOLT M6x15	14							

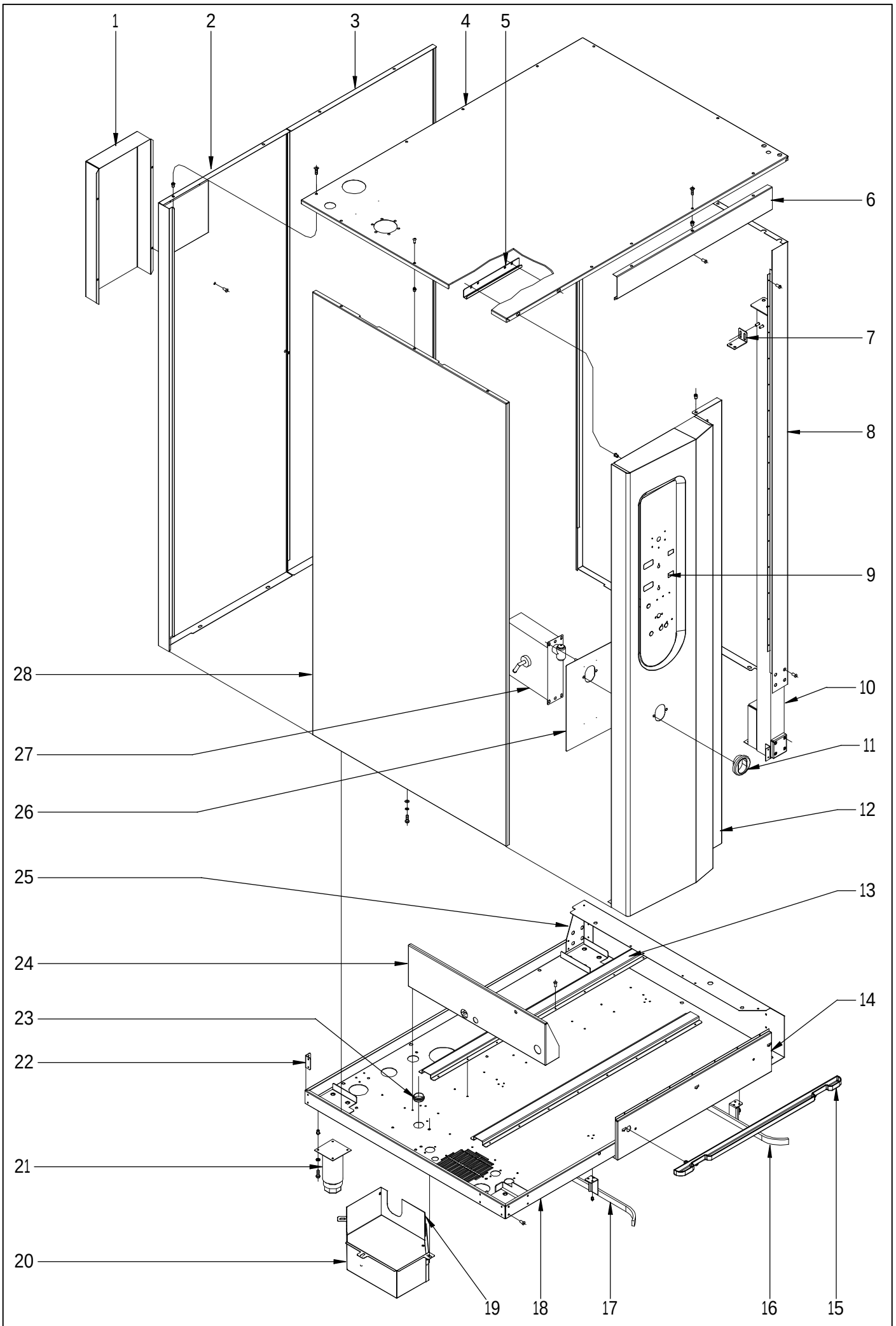

N plano	Firma	Fecha	Aparato	Lamina	
C-1995		2008-04	MUEBLE HORNO HEP-20/21	2	Fagor Industrial S.Coop. Oñate

MOD.	HORNOS	ZONA	MUEBLE	PLANO	C-1995

ITEM	CODIGO	DENOMINACION	TEXTO	HEP 20/21							NOTAS
1	T452814000	CHAPA SEPARACION IPX5 20/21	SEPARATION PLATE IPX5 20/21	1							
	Q412002000	REMACHE AVINOX Ø4x10mm	RIVET AVINOX Ø4x10mm	2							
2	T452817000	PANEL POST. DER. HGC-E 2021	REAR RIGHT PANEL HGC-E 202	1							
3	T492848000	PANEL POSTERIOR EXT. IZQ. 2021	REAR LEFT EXT. PANEL 2021	1							
4	T452806000	PANEL SUPERIOR EXTERIOR 2021	UPPER EXTERIOR PANEL2021	1							
	Q221342000	REMACHE EXAGONAL M5	HEXAGONAL RIVET M5	13							
	Q152004000	TORNIL, APLASTADO M5x13 A304	FLAT HEADED BOLT M5x13 A304	13							
5	T302834000	CANALETA PORTAMANDOS	CONTROL HOLDER PIPE	1							
	Q412005000	REMACHE TUBULAR 3.3X8.7	TUBULAR RIVET 3.3 X 8.7	4							
6	T302804000	PANEL ANTERIOR SUPERIOR	UPPER FRONT PANEL	1							
7	T492825000	ESCUADRA TUBO BISGRA	HINGE PIPE BRACKET	1							
8	T492805000	PANEL EXTERIOR DCHO. 20/21	RIGHT EXT. PANEL 20/21	1							
	Q221343000	REMACHE EXAGONAL M6	HEXAGONAL RIVET M6	8							
	Q232040000	ARANDELA A6	WASHER A6	8							
	Q262040000	ARAND.GROW. A6 A.304	WASHER GROW. A6 A.304	8							
	Q012042000	TORNILLO EXAGONAL M6x15	HEXAGONAL BOLT M6x15	8							
9	T333001000	SERIGRAFIA HEP-10-11 10-21	SERIGRAPHY HEP-10-11 10-21	1							
10	T492824000	TUBO PORTABISAGRAS	HINGE CARRIER PIPE	1							
	Q412002000	REMACHE AVINOX Ø4x10mm	RIVET AVINOX Ø4x10mm	64							
11	T452813000	SOPORTE DUCHA	SHOWER SUPPORT	1							
12	T452800000	PANEL PORTAMANDOS COM 20/21	CONTROL HOLDER PANEL 20/21	1							
	Q412005000	REMACHE AVINOX Ø3,2x6mm	RIVET AVINOX Ø3.2x6mm	44							
13	T302818000	REFUERZO LONGITUDINAL BASE	REINFOR. LONGITUDINAL BASE	2							
14	T492864000	PANEL FRONTAL INFERIOR	LOWER FRONT PANEL	1							
15	T452830000	RECOGEAGUAS PLASTICO 20-21	PLASTIC WATER COLLECTOR 20	1							
	Q221342000	REMACHE EXAGONAL M5	HEXAGONAL RIVET M5	2							
	Q042022000	TORNILLO AVELLANADO M4X15	COUNTERSUNK BOLT M4x15	2							
16	T492820000	GUIA CARRO COMPLETA DCHA.	COMP. RIGHT TROLLEY GUIDE	1							
	Q412002000	REMACHE AVINOX Ø4x10mm	RIVET AVINOX Ø4x10mm	4							
17	T492821000	GUIA CARRO COMPLETA IZDA.	COM. LEFT TROLLEY GUIDE	1							
	Q412002000	REMACHE AVINOX Ø4x10mm	RIVET AVINOX Ø4x10mm	4							

MOD.	HORNOS	ZONA	MUEBLE	PLANO	C-1995

ITEM	CODIGO	DENOMINACION	TEXTO	HEP 20/21							NOTAS
18	T452820000	BASE COMPLETA E-C-20/21	COMPLETE BASE E-C-20/21	1							
	Q412006000	REMACHE AVINOX Ø4x12mm	RIVET AVINOX Ø4x12mm	8							
S/Nº	T332806000	TAPA INFERIOR BASE LAVADO	LOWER COVER WASHING BASE	1							
	Q012032000	TORNILLO EXAGONAL M5x15	HEXAGONAL BOLT M5x15	4							
	Q242030000	ARANDELA ABANICO A5 A.304	FAN WASHER A5 A.304	4							
	Q221342000	REMACHE EXAGONAL M5	HEXAGONAL RIVET M5	4							
19	T330748000	TAPA CAJA CUBRE SIST LAVADO	COVER WASHING SYSTEM BOX	1							
	Q032031000	TORNILLO ALOMADO M5X10	CURVED SCREW M5X10	3							
20	T330747000	CAJA CUBRE SISTEMA LIMPIEZA	CLEANING SYSTEM BOX	1							
	Q012032000	TORNILLO EXAGONAL M5x15	HEXAGONAL BOLT M5x15	3							
	Q242030000	ARANDELA ABANICO A5 A.304	FAN WASHER A5 A.304	3							
	Q221342000	REMACHE EXAGONAL M5	HEXAGONAL RIVET M5	3							
21	R092830000	PATA REF. AA179EOAQ44CCN	LEG REF. AA179EOAQ44CCN	4							
	Q221343000	REMACHE EXAGONAL M6	HEXAGONAL RIVET M6	16							
	Q242040000	ARANDELA ABANICO A6 A.304	FAN WASHER A6 A.304	16							
	Q012042000	TORNILLO EXAGONAL M6x15	HEXAGONAL BOLT M6x15	16							
22	T302837000	CANTONERA BASE 10/21	BASE PROTECTOR 10/21	2							
23	X723014000	PASAMUROS DIAMETRO 30	WALL BUSHING DIAMETER 30	1							
24	T322808000	APOYO CUERPO HORNO	OVEN BODY SUPPORT	1							
25	T302816000	REFUERZO APOYO BASE POSTER	REAR BASE SUPPORT REINF.	1							
26	T452812000	CHAPA DUCHA COMPLETA	COMPLETE SHOWER PLATE	1							
27	T452809000	DUCHA	SHOWER	1							
28	T452807000	PANEL EXTERIOR IZDO. E 2021	LEFT EXT. PANEL E2021	1							
	Q221343000	REMACHE EXAGONAL M6	HEXAGONAL RIVET M6	8							
	Q232040000	ARANDELA A6	WASHER A6	8							
	Q262040000	ARAND.GROW. A6 A.304	WASHER GROW. A6 A.304	8							
	Q012042000	TORNILLO EXAGONAL M6x15	HEXAGONAL BOLT M6x15	8							

N.plano
C-1996

Firma

Fecha
2008-04

Aparato
HORNO HEP-10/21

PUERTA

Lamina
3

Fagor Industrial S.Coop.
Onate

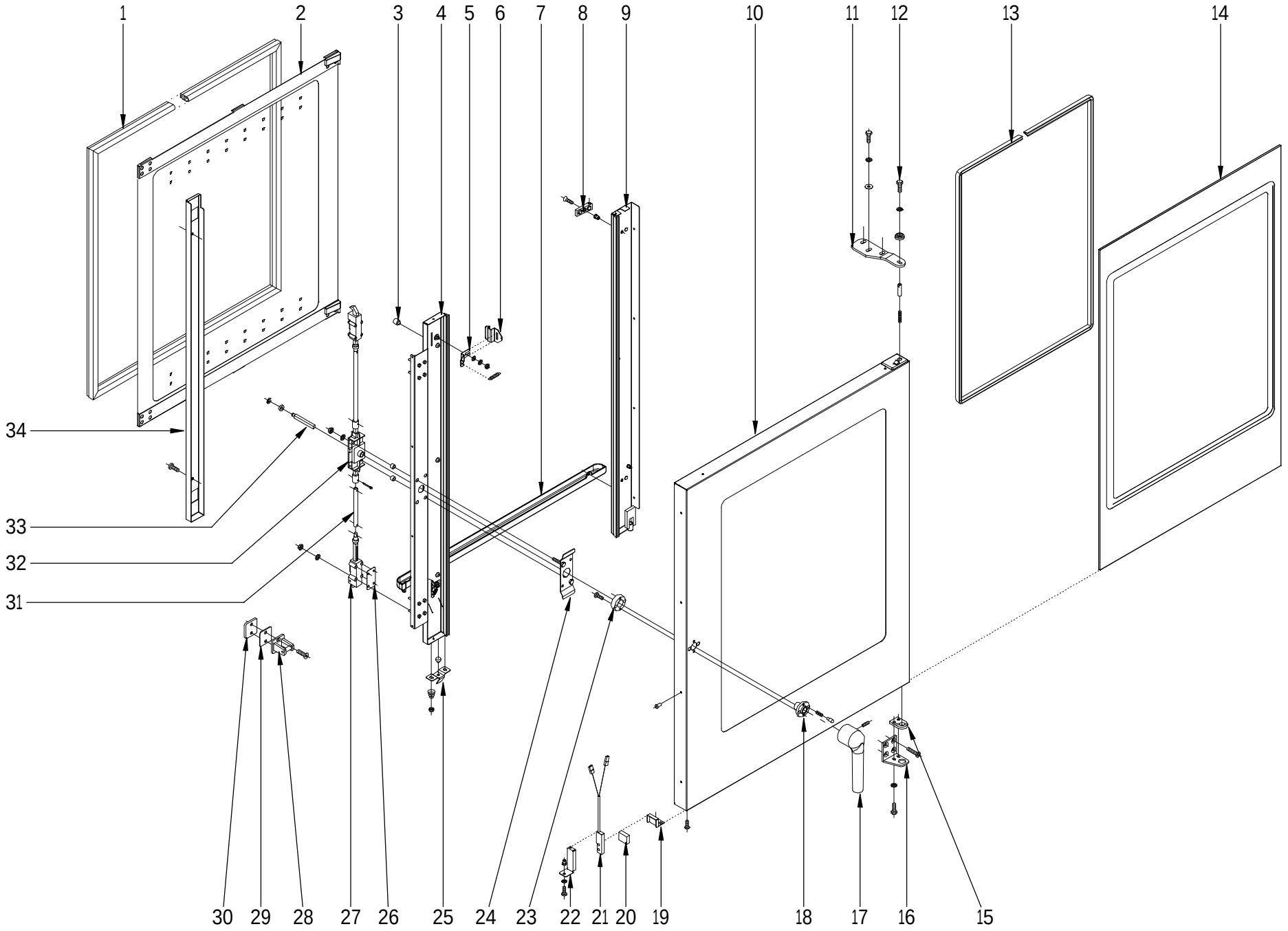

MOD.	HORNOS	ZONA	PUERTA	PLANO	C-1996

ITEM	CODIGO	DENOMINACION	TEXTO	HEP-10/21							NOTAS
	1100003101	**KIT PUERTA COMPLETA**	**COMPLETE DOOR KIT**	**1**							
1	T300500000	JUNTA PUERTA	DOOR SEAL	1							
2	**1100003136**	**KIT KRISTAL INTERIOR COMPLETO**	**COMPLETE INTERIOR GLASS KIT**	**1**							
3	T300513000	TOPE CRISTAL INTERIOR	INTERIOR GLASS BUFFER	4							
4	T300554000	CONTRAPUERTA MANILLA 10/21	DOOR REVERSE HANDLE 10/21	1							
5	R670612000	BASE DE PESTILLO	LATCH BASE	2							
	Q302022000	ARANDELA 16X6X1.2 A.304	WASHER 16X6X1.2 A.304	2							
	Q162030000	TUERCA EXAGONAL M5	HEXAGONAL NUT M5	2							
	Q242030000	ARANDELA ABANICO A5 A.304	FAN WASHER A5 A.304	2							
	R660605000	MUELLE TENSOR	TENSIONING SPRING	2							
6	T300514000	PESTILLO 10/21	LATCH 10/21	2							
7	T300556000	RECOGEAGUAS PUERTA	DOOR WATER COLLECTOR	1							
8	R670615000	BASE DE BISAGRA	HINGE BASE	2							
	Q222011000	REMACHE EXAGONAL M.5	HEXAGONAL RIVET M.5	2							
	Q042032000	TORNILLO AVELLANADO M5X15	COUNTERSUNK BOLT M5x15	2							
9	T300548000	CONTRAPUERTA BISA COMP 10/21	COMP. HINGE DOOR REVERSE 10/21	1							
10	T300545000	PANEL PUERTA COMPLETA 10-21	COMPLETE DOOR PANEL 10-21	1							
11	T300520500	BISAGRA SUPERIOR PLEGADA	UPPER FOLDED HINGE	1							
	Q012053000	TORNILLO EXAGONAL M8X20 A304	HEXAGONAL BOLT M8x20 A304	3							
	Q302025000	ARANDELA Ø 8.4X20X1.5	WASHER Ø 8.4X20X1.5	3							
	Q242050000	ARANDELA ABANICO A8 A.304	FAN WASHER A8 A.304	3							
12	Q012042000	TORNILLO EXAGONAL M6X15	HEXAGONAL BOLT M6x15	1							
	R662807000	ARANDELA AMARRE	ANCHORAGE WASHER	1							
	Q242040000	ARANDELA ABANICO A6 A.304	FAN WASHER A6 A.304	1							
	R660534000	EJE SUPERIOR	UPPER SHAFT	1							
	Z850519000	RESORTE 06329	SPRING 06329	1							
13	3715200000	JUNTA CRISTAL	WINDOW SEAL	1							
14	T300546000	CRISTAL EXTERIOR 10/21	EXTERIOR GLASS 10/21	1							
15	R660549000	GUIA EJE INFERIOR FUNDIDO	LOWER SHAFT GUIDE, CAST IRON	1							

MOD.	HORNOS	ZONA	PUERTA	PLANO	C-1996

ITEM	CODIGO	DENOMINACION	TEXTO	HEP-10/21							NOTAS
16	T300521500	BISAGRA INFERIOR	LOWER HINGE	1							
	Q012091000	TORN. EXAG. M6X12 INOX DIN933	HEX. BOLT M6x12 INOX DIN933	2							
	Q242040000	ARANDELA ABANICO A6 A.304	FAN WASHER A6 A.304	2							
	Q062040000	TORN.AVELL.M6X16	COUNTERSUNK BOLT M6X16	4							
17	T130502000	MANILLA COMPLETA	COMPLETE HANDLE	1							
	Q132042000	VARILLA ROSCADA M6X15	THREADED ROD M6X15	1							
18	T130515000	GUIA MANILLA	HANDLE GUIDE	1							
	T130507000	PITON ENGANCHE PUERTA	DOOR FASTENER SPIKE	2							
	T130506000	RESORTE 34548	SPRING 34548	2							
19	T300525000	SOPORTE IMAN	MAGNET BRACKET	1							
20	T300526000	IMAN	MAGNET	1							
21	Z100522000	INTERRUPTOR MAGNETICO	MAGNETIC SWITCH	1							
	Q222011000	REMACHE EXAGONAL M.5	HEXAGONAL RIVET M.5	1							
	Q032031000	TORNILLO ALOMADO M5X10	CURVED SCREW M5X10	1							
22	T302819000	RESORTE INTERRUP. MAGNETICO	MAGNETIC SWITCH SPRING	1							
23	T130514000	SOPORTE RESORTE	SPRING SUPPORT	1							
	Q032032000	TORNILLO ALOMADO M5x15	CURVED SCREW M5X15	2							
24	T130511000	SUPLEMENTO SUJ. CERRADURA	ANCHORAGE SUPPL. LOCK	1							
25	T300543000	CIERRE RECOGEAGUAS	WATER COLLECTOR COVER	1							
	T300518000	TAPON CIERRE CANALETA 10/21	CAP CHANNEL COVER 10/21	1							
	T300541000	MUELLE CIERRE RECOGEAGUAS	SPRING WATER COLLECTOR CO	1							
	Q221308000	TUERCA EXAGONAL M5 H.ZINCADA	HEXAGONAL NUT M5 ZINC	1							
26	T080503000	SUPLEMENTO ELEMENTO CIERRE	SUPPLEMENT LOCK ELEMENT	10							
27	T080504000	ELEMENTO CIERRE	LOCK ELEMENT	2							
	Q242030000	ARANDELA ABANICO A5	FAN WASHER A5	8							
	Q162030000	TUERCA EXAGONAL M5	HEXAGONAL NUT M5	8							
28	T110506000	ENGANCHE PUERTA MONTADO	FITTED DOOR FASTENER	2							
	Q042045000	TORNILLO AVELLANADO M6x30	COUNTERSUNK BOLT M6x30	4							
29	R660538000	CALZO DE ENGANCHE	FASTENER WEDGE	4							
30	T300519000	SUPLEMENTO ENGANCHE	FASTENER SUPPLEMENT	2							
31	T300507000	TUBO ALARGADERA	EXTENSION PIPE	2							

MOD.	HORNOS	ZONA	PUERTA	PLANO	C-1996

ITEM	CODIGO	DENOMINACION	TEXTO	HEP-10/21							NOTAS
32	T130509000	MECANISMO CIERRE	LOCK MECHANISM	1							
	Q262040000	ARAND.GROW. A6 A.304	WASHER GROW. A6 A.304	2							
	Q162040000	TUERCA EXAGONAL M6	HEXAGONAL NUT M6	2							
	Z608410000	CASQUILLO AMARRE TECLADO	KEYBOARD ANCHORAGE BUSHI	2							
	Q352001000	PASADOR DE ALETAS 2X20	COTTER PIN 2X20	4							
33	T130508000	EJE DE MANILLA	LEVER SHAFT	1							
	T130505000	CASQUILLLO	BUSHING	1							
	Q271033000	ARANDELA DE SEGURIDAD 6	SAFETY WASHER 6	1							
34	T300508000	TAPA CIERRE PUERTA	DOOR CLOSING COVER	1							
	Q032021000	TORNILLO ALOMADO M4x10	CURVED SCREW M4X10	2							

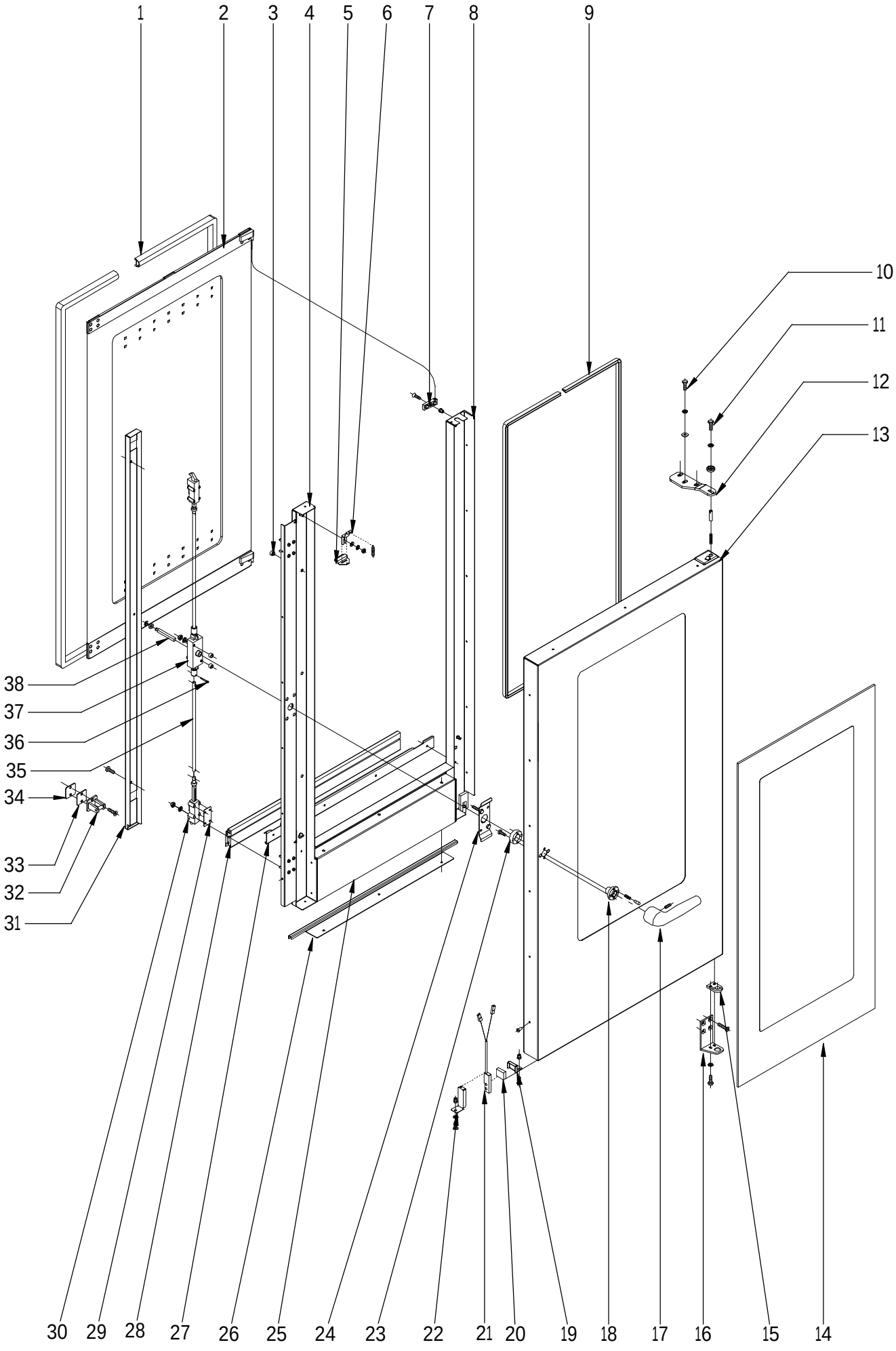

N plano	Firma	Fecha	Aparato		Lamina	
C-1997		2008-04	PUERTA HORNO HEP-20/21		4	Fagor Industrial S.Coop. Oñate

MOD.	HORNOS	ZONA	PUERTA	PLANO	C-1997

ITEM	CODIGO	DENOMINACION	TEXTO	HEP 20/21							NOTAS
	1100003116	**KIT PUERTA COMPLETA**	**COMPLETE DOOR KIT**	**1**							
1	T490500000	JUNTA PUERTA 20/21	DOOR SEAL 20/21	1							
2	**1100003117**	**KIT CRISTAL INTER. 20/21 COMPL.**	**INTER. GLASS KIT 20/21 COMPL**	**1**							
3	T300513000	TOPE CRISTAL INTERIOR 10/21	INTERIOR GLASS BUFFER 10/21	4							
	T300537000	TOPE CRISTAL INTERIOR	INTERIOR GLASS BUFFER	4							
4	T490528000	CONTRAP. MANILLA COMPL 20/21	DOOR REVERSE COMPLETE LEV	1							
5	T300514000	PESTILLO 10/21	LATCH 10/21	2							
6	R670612000	BASE DE PESTILLO	LATCH BASE	2							
	Q302022000	ARANDELA 16X6X1.2 A.304	WASHER 16X6X1.2 A.304	2							
	Q162030000	TUERCA EXAGONAL M5	HEXAGONAL NUT M5	2							
	Q242030000	ARANDELA ABANICO A5 A.304	FAN WASHER A5 A.304	2							
	R660605000	MUELLE TENSOR	TENSIONING SPRING	2							
7	R670615000	BASE DE BISAGRA	HINGE BASE	2							
	Q222011000	REMACHE EXAGONAL M.5	HEXAGONAL RIVET M.5	2							
	Q042032000	TORNILLO AVELLANADO M5X15	COUNTERSUNK BOLT M5x15	2							
8	T490527000	CONTRAPUERTA BISAGRA 20/21	DOOR REVERSE HINGE 20/21	1							
9	3715200000	JUNTA CRISTAL	WINDOW SEAL	2							
10	Q012053000	TORNILLO EXAGONAL M8X20 A304	HEXAGONAL BOLT M8x20 A304	3							
	Q302025000	ARANDELA Ø 8.4X20X1.5	WASHER Ø 8.4X20X1.5	3							
	Q242050000	ARANDELA ABANICO A8 A.304	FAN WASHER A8 A.304	3							
11	Q012042000	TORNILLO EXAGONAL M6X15	HEXAGONAL BOLT M6x15	1							
	R662807000	ARANDELA AMARRE	ANCHORAGE WASHER	1							
	Q242040000	ARANDELA ABANICO A6 A.304	FAN WASHER A6 A.304	1							
12	T300520500	BISAGRA SUPERIOR PLEGADA	UPPER FOLDED HINGE	1							
	R660534000	EJE SUPERIOR	UPPER SHAFT	1							
	Z850519000	RESORTE 06329	SPRING 06329	1							
13	T490525000	PUERTA 20/21	DOOR 20/21	1							
14	T490526000	CRISTAL EXTERIOR 20/21	EXTERIOR GLASS 20/21	1							
15	R660549000	GUIA EJE INFERIOR FUNDIDO	LOWER SHAFT GUIDE, CAST IRC	1							

MOD.	HORNOS	ZONA	PUERTA	PLANO	C-1997

ITEM	CODIGO	DENOMINACION	TEXTO	HEP 20/21							NOTAS
16	T300521500	BISAGRA INFERIOR	LOWER HINGE	1							
	Q012091000	TORN. EXAG. M6X12 INOX DIN933	HEX. BOLT M6x12 INOX DIN933	2							
	Q242040000	ARANDELA ABANICO A6 A.304	FAN WASHER A6 A.304	2							
	Q062040000	TORNILLO AVELLANADO M6X16	COUNTERSUNK BOLT M6x16	4							
17	T130502000	MANILLA COMPLETA	COMPLETE HANDLE	1							
	Q032032000	TORNILLO ALOMADO M5X15	CURVED SCREW M5X15	2							
	Q271033000	ARANDELA DE SEGURIDAD 6	SAFETY WASHER 6	1							
	Q132042000	VARILLA ROSCADA M6X15	THREADED ROD M6X15	1							
	T130510000	TAPON Ø 16 BAGAL Ext.	COVER Ø 16 BAGAL Ext.	1							
18	T130515000	GUIA MANILLA	HANDLE GUIDE	1							
	T490518000	PITON ENGANCHE PUERTA	DOOR FASTENER SPIKE	2							
	T130506000	RESORTE 34548	SPRING 34548	2							
19	T300525000	SOPORTE IMAN	MAGNET BRACKET	1							
	Q222011000	REMACHE EXAGONAL M.5	HEXAGONAL RIVET M.5	1							
	Q032031000	TORNILLO ALOMADO M5X10	CURVED SCREW M5X10	1							
20	T300526000	IMAN	MAGNET	1							
21	Z100522000	INTERRUPTOR MAGNETICO	MAGNETIC SWITCH	1							
22	T302819000	SOPORTE MICRO PUERTA	DOOR MICRO SWITCH	1							
	Q222011000	REMACHE EXAGONAL M.5	HEXAGONAL RIVET M.5	1							
	Q242030000	ARANDELA ABANICO A5 A.304	FAN WASHER A5 A.304	1							
	Q152004000	TORNIL. APLASTADO M5X13 A 304	FLAT HEADED SCREW M5x13 A 3	1							
23	T130514000	SOPORTE RESORTE	SPRING SUPPORT	1							
	Q032032000	TORNILLO ALOMADO M5x15	CURVED SCREW M5X15	2							
24	T130511000	SUPLEMENTO SUJ. CERRADURA	ANCHORAGE SUPPL. LOCK	1							
25	T490524000	CHAPA AMARRE CONTRAPUERTA	DOOR REVERSE FASTENING PL	1							
26	T490534000	SUPERIOR CIERRE PUERTA	UPPER DOOR LOCK	1							
27	T490512000	CHAPA JUNTA CONTRAPUERTA	DOOR REVERSE SEAL PLATE	1							
28	T450530000	JUNTA CIERRE INFERIOR	LOWER DOOR LOCK	1							
29	T080503000	SUPLEMENTO ELEMENTO CIERRE	SUPPLEMENT LOCK ELEMENT	10							

MOD.	HORNOS	ZONA	PUERTA	PLANO	C-1997

ITEM	CODIGO	DENOMINACION	TEXTO	HEP 20/21							NOTAS
30	T080504000	ELEMENTO CIERRE	LOCK ELEMENT	2							
	Q262040000	ARAND.GROW. A6 A.304	WASHER GROW. A6 A.304	10							
	Q162040000	TUERCA EXAGONAL M6	HEXAGONAL NUT M6	10							
31	T490503000	TAPA CIERRE PUERTA 20/21	DOOR LOCK COVER 20/21	1							
	Q032021000	TORNILLO ALOMADO M4X10	CURVED SCREW M4X10	2							
32	T110506000	ENGANCHE PUERTA	DOOR FASTENER	2							
	Q043145000	TORN. AVELLANADO 6X30 LATON	HEXAGONAL BRASS COUNTERS	4							
33	R660538000	CALZO DE ENGANCHE	FASTENER WEDGE	2							
	Q221343000	REMACHE EXAGONAL M.6	HEXAGONAL RIVET M.6	2							
34	T300519000	SUPLEMENTO ENGANCHE	FASTENER SUPPLEMENT	2							
35	T490506000	TUBO ALARGADERA	EXTENSION PIPE	2							
36	Q352001000	PASADOR DE ALETAS 2X20	COTTER PIN 2X20	4							
37	T130509000	MECANISMO CIERRE	LOCK MECHANISM	1							
	Q262040000	ARANDELA GROW. A6 A.304	WASHER GROW. A6 A.304	6							
	Q162040000	TUERCA EXAGONAL M6	HEXAGONAL NUT M6	6							
	Z608410000	CASQUILLO AMARRE TECLADO	KEYBOARD ANCHORAGE BUSHI	2							
38	T490519000	EJE DE MANILLA PUERTA	DOOR HANDLE SHAFT	1							
	T130505000	CASQUILLO	BUSHING	1							

N.plano
C-1998

Firma

Fecha
2008-04

Aparato
HORNO HEP-10/21

MUEBLE INTERIOR

Lamina
5

Fagor Industrial S.Coop.
Oñate

FAGOR

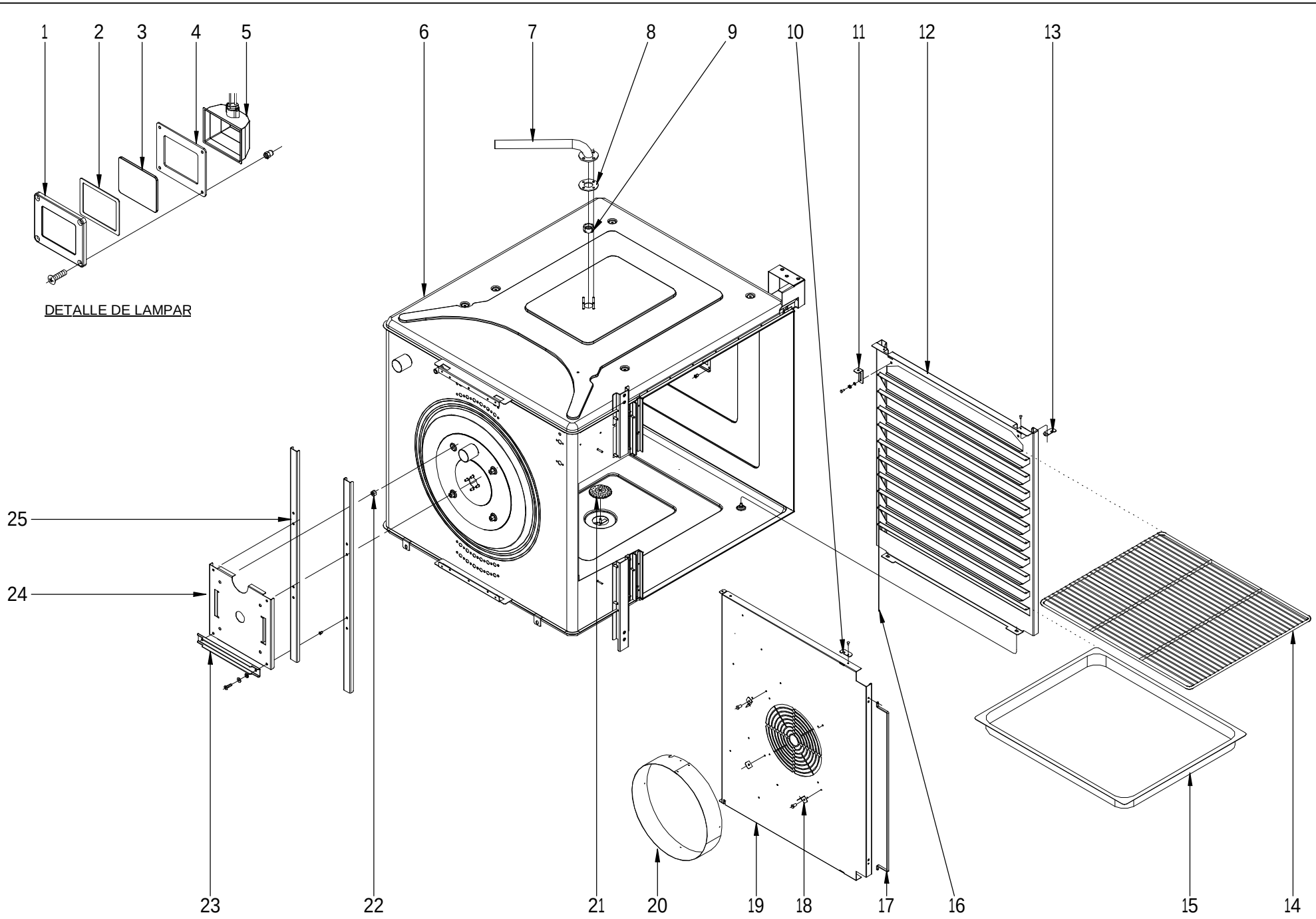

MOD.	HORNOS	ZONA	MUEBLE INTERIOR	PLANO	C-1998

ITEM	CODIGO	DENOMINACION	TEXTO	HEP-10/21							NOTAS
1	T303047000	MARCO LAMPARA	LAMP FRAME	1							
	R663013000	LAMPARA 10W-12V	LAMP 10W-12V	1							
	Q222041000	REMACHE EXAGONAL M.4 INOX	HEXAGONAL RIVET M4 (INOX)	4							
	Q032021000	TORNILLO ALOMADO M4X10	CURVED SCREW M4X10	4							
2	T303027000	JUNTA INTERIOR LAMPARA	LAMP INTERIOR SEAL	1							
3	T303025000	CRISTAL LAMPARA	LAMP GLASS	1							
4	T303026000	JUNTA EXTERIOR LAMPARA	LAMP EXTERIOR SEAL	1							
5	T303023000	PORTALAMPARAS	LAMP HOLDER	1							
6	T332605000	CUERPO INTERIOR HEP-10/21	INNER BODY HEP-10/21	1							
7	T360713000	TUBO DIFUSOR LAVADO COMPL,	COMPL, WASHING DISPENSER F	1							
8	T330744000	CHAPA AMARRE TUBO LAVADO	WASHING PIPE FASTENING PLA	1							
	Q152011000	PERNO SOLDADO M5X20 A304	WELDED BOLT M5X20 A304	4							
	Q162030000	TUERCA EXAGONAL M5	HEXAGONAL NUT M5	4							
	Q232030000	ARANDELA A5	WASHER A5	4							
	Q242030000	ARANDELA ABANICO A5 A.304	FAN WASHER A5 A.304	4							
9	T360712000	PUNTA DIFUSORA LAVADO	WASHING DISPENSER POINT	1							
10	T302635000	ENGANCHE CUBREVENTILADOR	FAN COVER FASTENER	2							
	Q412002000	REMACHE AVINOX Ø4x10mm	RIVET AVINOX Ø4x10mm	10							
11	T302690000	CIERRE PORTABANDEJAS 10/21	TRAY HOLDER CLOSURE 10/21	2							
	Q012021000	TORNILO EXAGONAL M4X10	HEXAGONAL BOLT M4x10	2							
	Q242020000	ARANDELA ABANICO A.4 A304	FAN WASHER A.4 A304	2							
	Q232020000	ARANDELA A-4	WASHER A-4	2							
	Q221341000	REMACHE EXAGONAL M4	HEXAGONAL RIVET M4	2							
12	T322611000	PORTABANDEJAS 1021	TRAY HOLDER 1021	2							
13	T302688000	ENGANCHE PORTABANDEJAS	TRAY HOLDER FASTENER	2							
	Q412006000	REMACHE AVINOX 4x12	RIVET AVINOX 4x12	2							
14	R682676000	PARRILLA 2x1 REF. 2025200	GRILLE 2X1 REF. 2025200	1							
15	R032605000	CUBETA 530x650 400 MM. 2x1	TRAY 530x650 400 MM. 2x1	1							
16	T302692000	TOPE DE BANDEJAS 10/21	TRAY BUFFER 10/21	2							
17	T302618000	PROTECCION INTERIOR	INTERIOR PROTECTION	1							
	Q412002000	REMACHE AVINOX Ø4x10mm	RIVET AVINOX Ø4x10mm	2							

MOD.	HORNOS	ZONA	MUEBLE INTERIOR	PLANO	C-1998

ITEM	CODIGO	DENOMINACION	TEXTO	HEP-10/21							NOTAS
18	T302643000	FIJACIÓN SUPLEMENTO	SUPPLEMENTARY FASTENING	4							
	Q412002000	REMACHE AVINOX Ø4x10mm	RIVET AVINOX Ø4x10mm	8							
19	T342609000	CUBREVENTILADOR 10/21	FAN COVER 10/21	1							
20	T442604000	SUPLEMENTO CUBREVENTILAD.	FAN COVER SUPPLEMENT.	1							
21	T302695000	FILTRO DESAGÜE COMPLETO	COMPLETE DRAINAGE FILTER	1							
22	T302638000	DISTANCIADOR MOTOR	MOTOR SPACER	4							
	Q012057000	TORNILLO EXAGONAL M8x50	HEXAGONAL BOLT M8x50	4							
	Q242050000	ARANDELA ABANICO A8 A.304	FAN WASHER A8 A.304	4							
	Q162050000	TUERCA EXAGONAL M8x1	HEXAGONAL NUT M8x1	4							
23	T302649000	REFUERZO MOTOR 10/21	MOTOR REINFORCEMENT 10/21	1							
	Q232030000	ARANDELA A5	WASHER A5	4							
	Q242030000	ARANDELA ABANICO A5 A.304	FAN WASHER A5 A.304	4							
	Q012032000	TORNILLO EXAGONAL M5x15 A304	HEXAGONAL BOLT M5x15 A304	4							
24	T302627000	SOPORTE MOTOR	MOTOR SUPPORT	1							
25	T302628000	PERFIL SOPORTE MOTOR	PROFILE MOTOR SUPPORT	2							
	Q222011000	REMACHE EXAGONAL M.5	HEXAGONAL RIVET M.5	4							
S/Nº	T302650000	AISLANTE TECHO 970x850x20	ROOF INSULATION 970x850x20	3							
S/Nº	T302651000	AISLANTE 890x850x20	INSULATION 890x850x20	3							
S/Nº	T302653000	AISLANTE 1230x900x10	INSULATION 1230x900x10	1							
S/Nº	T452608000	AISLANTE 610x160x10	INSULATION 610x160x10	1							
S/Nº	T322604000	AISLANTE 1000x120x20	INSULATION 1000x120x20	1							
S/Nº	T302658000	AISLANTE 1000x30x10	INSULATION 1000x30x20	1							
	T302667000	ARANDELA SUJECCION AISLANTE	INSULATION FASTENING WASHE	13							
	Q221026000	CLIP SUJECCION RAPIDA D-4	QUICK FASTENING CLIP D-4	13							

N.plano
C-1999

Firma

Fecha
2008-04

Aparato
HORNO HEP-20/21

MUEBLE INTERIOR

Lamina
6

Fagor Industrial S.Coop.
Onate

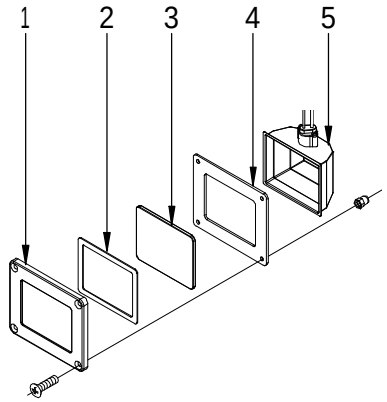

DETALLE DE LAMPARA

MOD.	HORNOS	ZONA	MUEBLE INTERIOR	PLANO	C-1999

ITEM	CODIGO	DENOMINACION	TEXTO	HEP 20/21							NOTAS
1	T303047000	MARCO LAMPARA	LAMP FRAME	2							
	R663013000	LAMPARA 10W-12V	LAMP 10W-12V	2							
	Q222041000	REMACHE EXAGONAL M.4 INOX	HEXAGONAL RIVET M4 (INOX)	8							
	Q032021000	TORNILLO ALOMADO M4X10	CURVED SCREW M4X10	8							
2	T303027000	JUNTA INTERIOR LAMPARA	LAMP INTERIOR SEAL	2							
3	T303025000	CRISTAL LAMPARA	LAMP GLASS	2							
4	T303026000	JUNTA EXTERIOR LAMPARA	LAMP EXTERIOR SEAL	2							
5	T303023000	PORTALAMPARAS	LAMP HOLDER	2							
6	T302638000	DISTANCIADOR MOTOR	MOTOR SPACER	8							
	Q012056000	TORNILLO EXAGONAL M8X40	HEXAGONAL BOLT M8x40	8							
	Q242050000	ARANDELA ABANICO A8 A.304	FAN WASHER A8 A.304	8							
	Q162050000	TUERCA EXAGONAL M8X1 INOX	HEXAGONAL NUT M8x1 INOX.	8							
7	T472601000	CUERPO COMPLETO HEP-20/21	COMPLETE BODY HEP -20/21	1							
8	T360713000	TUBO DIFUSOR LAVADO COMPL	COMPL. WASHING DISPENSER F	1							
9	T330744000	CHAPA AMARRE TUBO LAVADO	WASHING PIPE FASTENING PLA	1							
	Q162030000	TUERCA EXAGONAL M5	HEXAGONAL NUT M5	4							
	Q232030000	ARANDELA A5	WASHER A5	4							
	Q242030000	ARANDELA ABANICO A5 A.304	FAN WASHER A5 A.304	4							
10	T360712000	PUNTA DIFUSORA LAVADO	WASHING DISPENSER POINT	1							
11	T442604000	SUPLEMEN. CUBREVENTILADOR	SUPPLEMENTARY FAN COVER	2							
	Q302022000	ARANDELA 16X6X1.2 A.304	WASHER 16X6X1.2 A.304	4							
	Q162030000	TUERCA EXAGONAL M5	HEXAGONAL NUT M5	4							
12	T302643000	FIJACIÓN SUPLEMENTO	SUPPLEMENTARY FASTENING	8							
	Q412002000	REMACHE AVINOX Ø4x10mm	RIVET AVINOX Ø4x10mm	16							
13	T302635000	ENGANCHE CUBREVENTILADOR	FAN COVER FASTENER	2							
	Q412002000	REMACHE AVINOX Ø4x10mm	RIVET AVINOX Ø4x10mm	2							
14	T302618000	PROTECCION INTERIOR	INTERIOR PROTECTION	2							
	Q412002000	REMACHE AVINOX Ø4x10mm	RIVET AVINOX Ø4x10mm	4							
15	T452618000	CUBREVENTILADOR 20/21E	FAN COVER 20/21E	1							
16	T452605000	CHAPA REFUERZO CUBA E20/21	TUB REINFORC. PLATE E20/21	1							

MOD.	HORNOS	ZONA	MUEBLE INTERIOR	PLANO	C-1999

ITEM	CODIGO	DENOMINACION	TEXTO	HEP 20/21							NOTAS
17	T455030000	FILTRO DESAGÜE Ø70 20/21	DRAINAGE FILTER Ø70 20/21	1							
	Q232030000	ARANDELA A5	WASHER A5	2							
	Q242030000	ARANDELA ABANICO A5 A.304	FAN WASHER A5 A.304	2							
	Q162030000	TUERCA EXAGONAL M5	HEXAGONAL NUT M5	2							
18	T453007000	CHAPA PROTECCION BOMBA 2021	PUMP PROTECTION PLATE 2021	1							
	Q412002000	REMACHE AVINOX Ø4x10mm	RIVET AVINOX Ø4x10mm	2							
19	T492606000	PERFIL SOPORTE MOTOR 2021	PROFILE MOTOR SUPPORT 2021	2							
	Q222011000	REMACHE EXAGONAL M.5	HEXAGONAL RIVET M.5	12							
20	T302649000	REFUERZO MOTOR	MOTOR REINFORCEMENT	3							
	Q232030000	ARANDELA A5	WASHER A5	6							
	Q242030000	ARANDELA ABANICO A5 A.304	FAN WASHER A5 A.304	6							
	Q012032000	TORNILLO EXAGONAL M5x15 A304	HEXAGONAL BOLT M5x15 A304	6							
21	T302627000	SOPORTE MOTOR	MOTOR SUPPORT	2							
S/Nº	T302650000	AISLANTE 970X850X20	INSULATION 970x850x20	3							
S/Nº	T492621000	AISLANTE 1550X850X20	INSULATION 1550X850X20	3							
S/Nº	T452607000	AISLANTE 780X1230X10 E	INSULATION 780X1230X10 E	1							
S/Nº	T452610000	AISLANTE 800X1230X10	INSULATION 800X1230X10	1							
S/Nº	T452608000	AISLANTE 610X160X10	INSULATION 610X160X10	1							
S/Nº	T452609000	AISLANTE 1680x120x10	INSULATION 1680x120x10	1							
S/Nº	T492624000	AISLANTE 1680x30x10	INSULATION 1680x30x10	1							
	T302667000	ARANDELA SUJECCION AISLANTE	INSULATOR FASTENING WASHE	25							
	Q221026000	CLIP SUJECIÓN RÁPIDA Ø-4	RAPID FASTENING CLIP Ø-4	25							

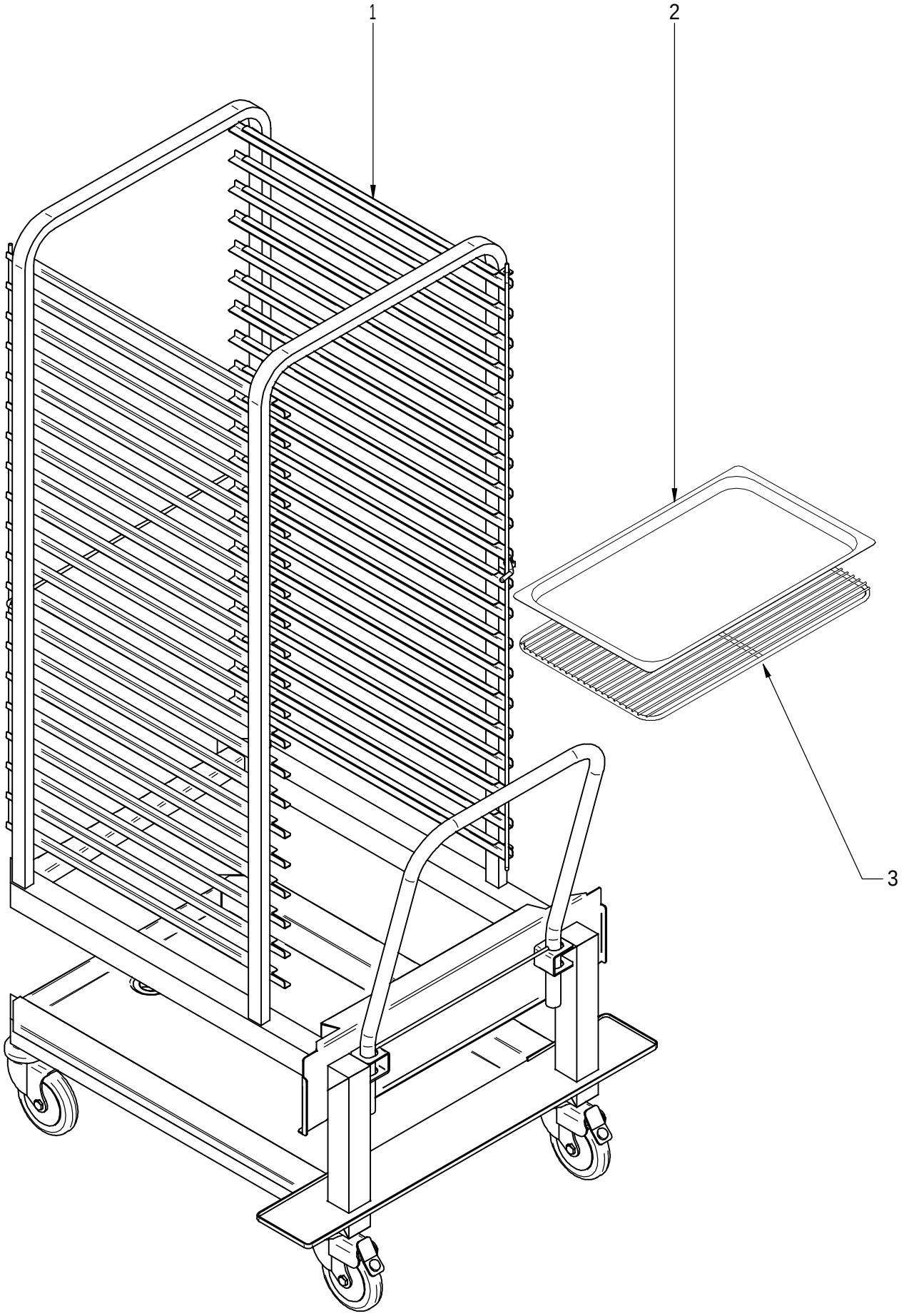

N plano	Firma	Fecha	Aparato		Lamina	
C-2000		2008-04	CARRO HORNO HEP 20/21		7	Fagor Industrial S.Coop. FAGOR Oñate

MOD.	HORNOS	ZONA	CARRO	PLANO	C-2000

ITEM	CODIGO	DENOMINACION	TEXTO	HEP 20/21							NOTAS
1	T492823000	CARRO 20/21	TROLLEY 20/21	1							
	T492853000	CODO DESAGÜE CARRO 20/21	TROLLEY DRAINAGE L-BEND 20/	1							
2	R032605000	CUBETA 530x650 400 MM. 2x1	TRAY 530x650 400 MM. 2x1	1							
3	R682676000	PARRILLA 2x1 REF. 2025200	GRILLE 2X1 REF. 2025200	1							

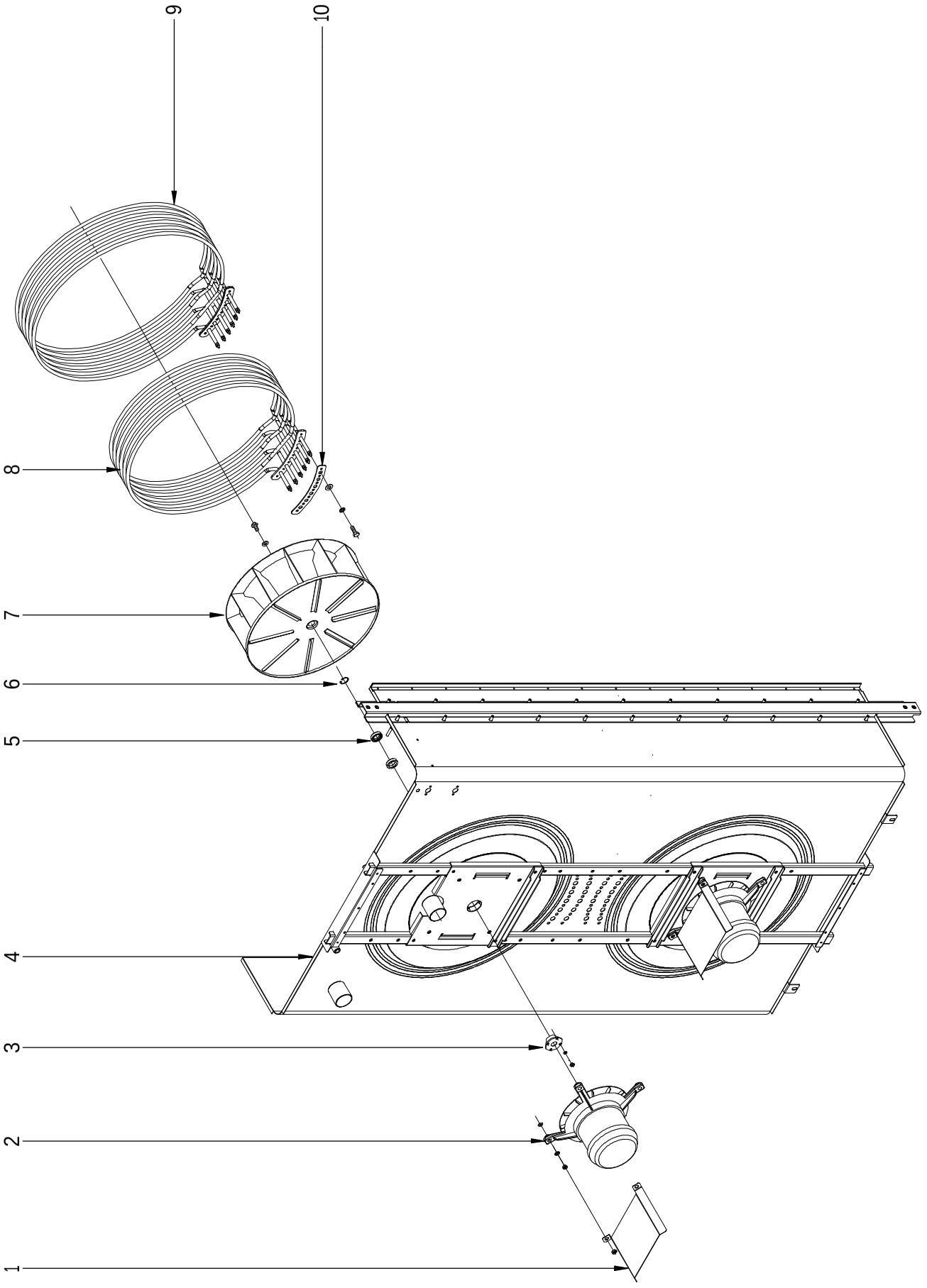

N plano	Firma	Fecha	Aparato	Lamina	
C-2001		2008-04	TURBINA HORNO HEP-10/21; 20/21	8	Fagor Industrial S.Coop. Oñate

MOD.	HORNOS	ZONA	TURBINA	PLANO	C-2001

ITEM	CODIGO	DENOMINACION	TEXTO	HEP-10/21	HEP 20/21						NOTAS
1	T302665000	TEJADILLO MOTOR	MOTOR ROOF	1	_						
1	T142635000	TEJADILLO MOTOR	MOTOR ROOF	_	2						
	Q162040000	TUERCA EXAGONAL M6	HEXAGONAL NUT M6	2	4						
	Q162040000	TUERCA EXAGONAL M6	HEXAGONAL NUT M6	2	4						
	Q262040000	ARANDELA GROW. A6 A.304	WASHER GROW. A6 A.304	4	8						
2	T323022000	MOTOR 2V 400V	MOTOR 2V 400V	1	_						
2	T493003000	MOTOR 20/21 2V 400V	MOTOR 20/21 2V 400V.	_	2						
3	T302629000	CASQUILLO RETEN	SEAL BUSHING	1	2						
	R662685000	JUNTA CASQUILLO RETEN	SEAL BUSHING GASKET	1	2						
	Q232040000	ARANDELA A6	WASHER A6	4	8						
	Q162040000	TUERCA EXAGONAL M6	HEXAGONAL NUT M6	4	8						
4	_____	PANEL DE CUERPO DE HORNO	OVEN BODY PANEL	1	1						
5	R662627000	RETEN 17X28X7V	SEAL 17X28X7V	2	4						
6	Q302023000	ANILLO DE SEGURIDAD D 28X1.2	SAFETY RING Ø 28X1.2	1	2						
7	T303015000	TURBINA 450	FAN 450	1	_						
7	T493017000	TURBINA RECTA D350X127 FIR	STRAIGHT FAN D350X127 FIR	_	2						
	R763010000	ARANDELA SEGURIDAD HANNING	SAFETY WASHER HANNING	1	2						
	Q012063000	TORNIL. EXAGONAL M10X20 A.304	HEXAGONAL BOLT M10X20 A.304	1	2						
8	T323034000	RESISTENCIA INTERIOR 3X5 KW	INTERIOR RESISTOR 3X5 KW	1	2						
9	T323035000	RESISTENCIA EXTERIOR 3X5 KW	EXTERIOR RESISTOR 3X5 KW	1	2						
10	T323021000	JUNTA RESISTENCIA	RESISTOR SEAL	2	4						
	Q012042000	TORNILLO EXAGONAL M6x15	HEXAGONAL BOLT M6x15	14	28						
	Q232040000	ARANDELA A6	WASHER A6	14	28						
	Q262040000	ARAND.GROW. A6 A.304	WASHER GROW. A6 A.304	14	28						
	Q162040000	TUERCA EXAGONAL M6	HEXAGONAL NUT M6	14	28						

N.plano
C-2002

Firma

Fecha
2008-04

Aparato
HORNO HEP-10/21; 20/21

INTERIOR CHIMENEA

Lamina
9

Fagor Industrial S.Coop.
Oñate

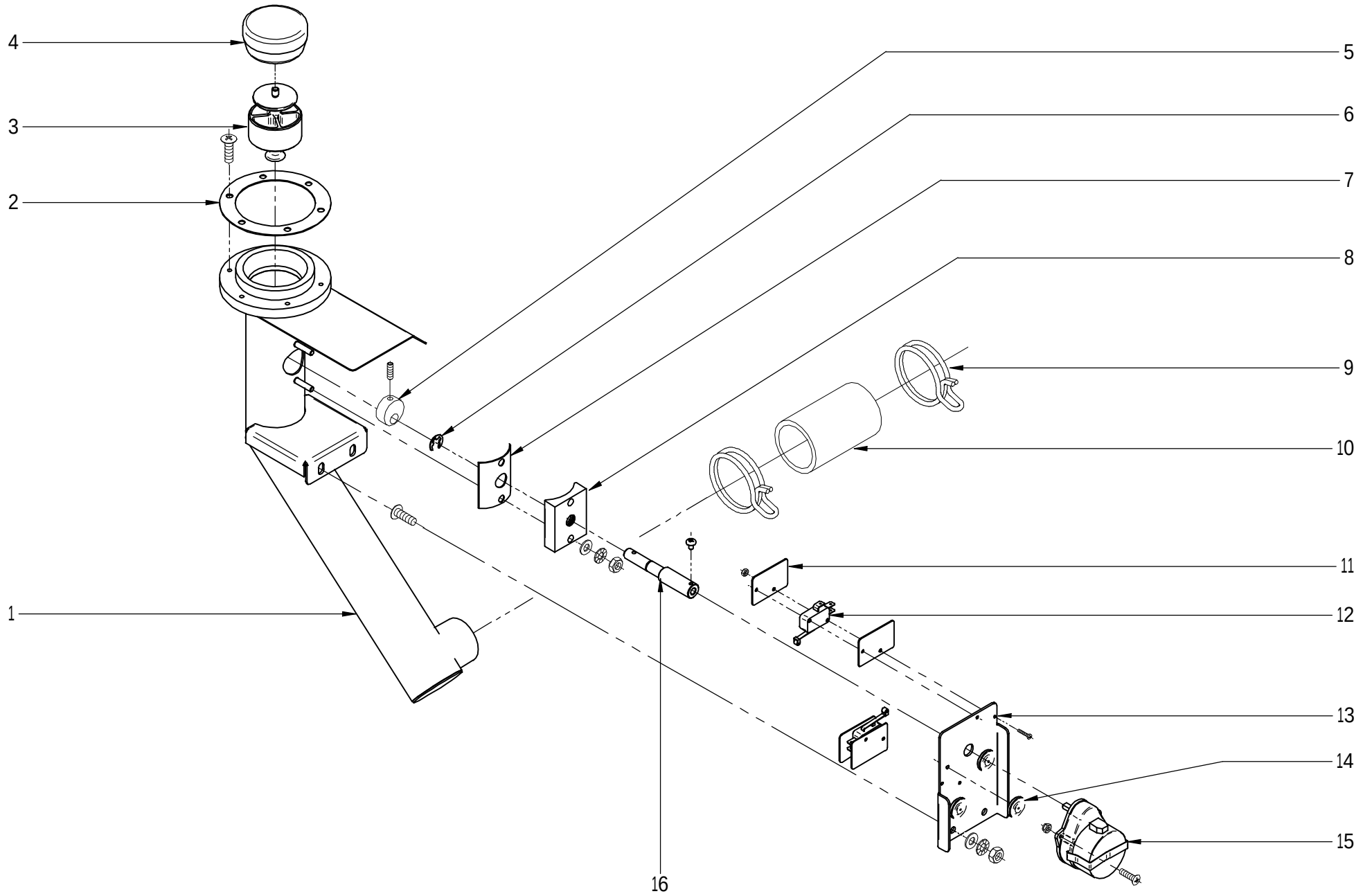

MOD.	HORNOS	ZONA	INTERIOR CHIMENEA	PLANO	C-2002

ITEM	CODIGO	DENOMINACION	TEXTO	HEP-10/21	HEP 20/21						NOTAS
1	T325021000	CONJUNTO CHIMENEA 10-21 E	FLUEPIPE UNIT 10-21 E	1	_						
1	T455008000	CONJUNTO CHIMENEA 20-21 E	FLUEPIPE UNIT 20-21 E	_	1						
2	T325057000	JUNTA BASE CHIMENEA	FLUEPIPE BASE SEAL	1	1						
	Q152004000	TORNIL, APLASTADO M5x13 A304	FLAT HEADED BOLT M5x13 A304	6	6						
3	T325051000	GUIA RETENCION VAPORES	STEAM RETAINER GUIDE	1	1						
4	T325055000	RETENCION DE VAPOR	STEAM RETAINER	1	1						
5	T325032000	LEVA EJE CHIMENEA	FLUEPIPE SHAFT CAM	1	1						
	Q132045000	VARILLA ROSCADA M4X16	THREADED ROD M4X16	1	_						
6	Q271006000	ARANDELA DE SEGURIDAD Ø8	SAFETY WASHER Ø8	1	1						
7	T325030000	JUNTA EJE CHIMENEA	FLUEPIPE SHAFT SEAL	1	1						
8	T325029000	GUIA EJE CHIMENEA	FLUEPIPE SHAFT GUIDE	1	1						
	Q232030000	ARANDELA A5	WASHER A5	2	2						
	Q242030000	ARANDELA ABANICO A5 A.304	FAN WASHER A5 A.304	2	2						
	Q162030000	TUERCA EXAGONAL M5	HEXAGONAL NUT M5	2	2						
9	Q901312000	ABRAZADERA ELASTICA 50.6-53.2	ELASTIC CLAMP 50.6-53.2	2	2						
10	3715800000	TUBO SILICONA ALTA Tº Ø 43*51	HIGH SILICON PIPE Tº Ø 43*51	1	1						
11	R010535000	PLACA SEPARADORA	SPACER PLATE	4	4						
	Q032013000	TORNILLO ALOMADO M3X20	CURVED SCREW M3X20	4	4						
	Q221350000	TUERCA AUTOBLOCANTE M3	SELF-LOCKING NUT M3	4	4						
12	R010534000	INTERRUPTOR PUERTA	DOOR SWITCH	2	2						
13	T325033000	ESCUADRA AMARRE MOTOR	MOTOR FASTENING BRACKET	1	1						
	Q012042000	TORNILLO EXAGONAL M6x15	HEXAGONAL BOLT M6x15	2	2						
	Q232040000	ARANDELA A6	WASHER A6	2	2						
	Q262040000	ARANDELA GROW. A6 A.304	WASHER GROW. A6 A.304	2	2						
	Q162040000	TUERCA EXAGONAL M6	HEXAGONAL NUT M6	2	2						
14	R675033000	JUNTA PALANCA ACCIONAMIENTO	DRIVE LEVER SEAL	3	3						
	Q042021000	TORNIL. AVELLANADO M4X10 A304	COUNTERSUNK BOLT M4X10 A3(	3	3						
15	T323010000	MOTOR CHIMENEA	FLUEPIPE MOTOR	1	1						
16	T325031000	EJE CHIMENEA	FLUEPIPE SHAFT	1	1						
	Q151320000	TOR. ALOMADO M4X6 H.ZINCADO	CURVED SCREW M4X6 H. ZINC	1	1						

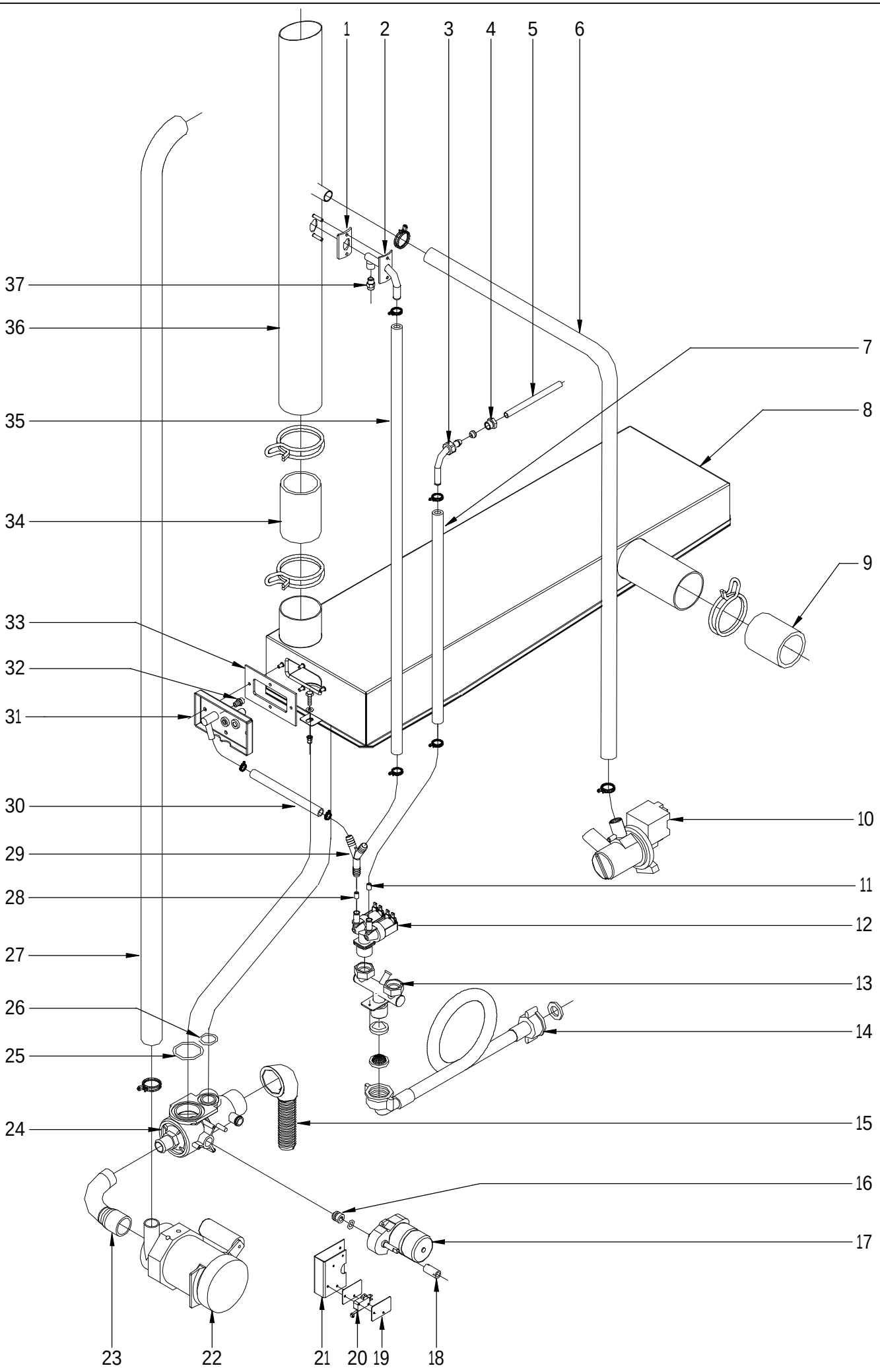

N plano	Firma	Fecha	Aparato		Lamina	
C-2003		2008-04	CIRCUITO DE AGUA HORNOS HEP-10/21; HEP-20/21		10	Fagor Industrial S.Coop. FAGOR Oñate

MOD.	HORNOS	ZONA	CIRCUITO DE AGUA	PLANO	C-2003

ITEM	CODIGO	DENOMINACION	TEXTO	HEP-10/21	HEP 20/21						NOTAS
1	R725159000	JUNTA TUBO INYECTOR	INJECTOR PIPE SEAL	_	1						
2	T115112000	CONDUCC. VAHOS COMPLETO	COMPLETE VAPOUR DUCT	_	1						
3	R695017000	TUBO CONDUCCION AGUA	WATER DUCT PIPE	1	1						
	R695004000	BICONO	BICONE	1	1						
4	R695003000	MANGUITO CIERRE	CLOSING SLEEVE	1	1						
5	R665024000	TUBO CONDUCCION INYECTOR	INJECTOR DUCT PIPE	1	1						
6	3715900000	TUBO SILICONA ALTA Tª Ø 26*18	HIGH SILICON PIPE Tº Ø 26*18	1	1						
	Q901311000	ABRAZADERA ELASTICA 26.7-28.1	ELASTIC CLAMP 26.7-28.1	2	2						
7	3676900000	TUBO GOMA NEGRA Ø17*10	BLACK RUBBER PIPE Ø17*10	1	1						
	Q901310000	ABRAZADERA ELASTICA 16.8-17.7	ELASTIC CLAMP 16.8-17.7	2	2						
8	T335002000	CAJA DE LAVADO COMPL. 10/21 E	COMPL. WASHING BOX 10/21 E	1	_						
8	T475003000	CAJÓN DESAGÜE COM. HEP-20/21	COM. DRAINAGE BOX HEP -20/21	_	1						
	Q012042000	TORNILLO EXAGONAL M6x15	HEXAGONAL BOLT M6x15	2	2						
	Q162030000	TUERCA EXAGONAL M5	HEXAGONAL NUT M5	2	2						
	Q232030000	ARANDELA A5	WASHER A5	2	2						
	Q012032000	TORNILLO EXAGONAL M5X15 A304	HEXAGONAL BOLT M5x15 A304	2	2						
	Q232040000	ARANDELA A6	WASHER A6	2	2						
	Q262040000	ARANDELA GROW. A6 A.304	WASHER GROW. A6 A.304	2	2						
	Q162040000	TUERCA EXAGONAL M6	HEXAGONAL NUT M6	2	2						
9	3715900000	TUBO SILICONA ALTA Tª Ø 43*51	HIGH SILICON PIPE Tº Ø 43*51	1	_						
9	T455029000	TUBO EMPALME GENERADOR	GENERATOR CONNECTI. PIPE	_	1						
	Q901313000	ABRAZADERA ELASTICA 62-66	ELASTIC CLAMP 62-66	1	1						
10	Z220901000	BOMBA DESAGUE 30W	DRAINAGE PUMP 30W	1	1						
10	Z223501000	BOMBA DE DESAGUE 30W 60HZ	DRAINAGE PUMP 30W 60HZ	_	1						
11	R665041000	REGULADOR 0,25L. ROJO	REGULATOR 0.25L. RED	1	_						
11	P305013000	REGULADOR 1L.AMA 255.005	REGULATOR 1L.AMA 255.005	_	1						
12	P255001000	ELECTROVALVULA DOBLE	DOUBLE SOLENOID VALVE	1	1						
13	T325063000	ENTRADA AGUA COMPLETA	COMPLETE WATER INLET	1	1						
	Q012021000	TORNILLO EXAGONAL M4x10 A304	HEXAGONAL BOLT M4x10 A304	2	2						
14	Z601114000	MANGUERA ENTRADA AGUA	WATER INTAKE HOSE	1	1						
	Z701132000	FILTRO DE JUNTA N-3	SEAL FILTER N-3	1	1						

MOD.	HORNOS	ZONA	CIRCUITO DE AGUA	PLANO	C-2003

ITEM	CODIGO	DENOMINACION	TEXTO	HEP-10/21	HEP 20/21						NOTAS
15	Z200910000	MANGUERA DESAGUE	DRAINAGE HOSE	1	1						
16	T330707000	PUNTA ACOP. MOTOR A VALVULA	CONNECTION POINT MOTOR TO	1	1						
	Q307084000	JUNTA TORICA Ø18X3,5	O-RING Ø18X3.5	1	1						
17	T330711000	MOTOR VALVULA	VALVE MOTOR	1	1						
	Q371026000	MANGUITO SUJEC. 4X14 ØIN1481	HOSE FASTENING 4X14 ØIN148	1	1						
	Q042022000	TORNILLO AVELLANADO M4X15	COUNTERSUNK BOLT M4x15	2	2						
18	T330733000	CASQUILLO MOTOR MICRO	MICRO MOTOR BUSHING	1	1						
	Q032021000	TORNILLO ALOMADO M4X10	CURVED SCREW M4X10	1	1						
19	R010535000	PLACA SEPARADORA	SPACER PLATE	4	4						
	Q032013000	TORNILLO ALOMADO M3X20	CURVED SCREW M3X20	8	8						
	Q221350000	TUERCA AUTOBLOCANTE M3	SELF-LOCKING NUT M3	8	8						
20	R010534000	INTERRUPTOR PUERTA	DOOR SWITCH	2	2						
21	T330713000	CHAPA SUJECION MICROS	FASTENING PLATE MICROS	1	1						
22	T360715000	MOTOBOMBA 5213E2450 FIR 50Hz	MOTOR-PUMP 5213E2450 FIR 50	1	1						
	Q012043000	TORNILLO EXAGONAL M6x20	HEXAGONAL BOLT M6x20	2	2						
	Q232040000	ARANDELA A6	WASHER A6	2	2						
	Q242040000	ARANDELA ABANICO A6 A.304	FAN WASHER A6 A.304	2	2						
23	T330731000	GOMA VALVULA BOMBA	PUMP VALVE RUBBER	1	1						
	Q881304000	ABRAZADERA 20-32	CLAMP 20-32	1	1						
	Q881305000	ABRAZADERA 25-40	CLAMP 25-40	1	1						
24	T330723000	CUERPO VALVULA COMPLETO	COMPLETE VALVE BODY	1	1						
25	Q307080000	JUNTA TORICA Ø52X3,5	O-RING Ø52X3.5	1	1						
26	Q307079000	JUNTA TORICA Ø33x3,5	O-RING Ø33x3.5	1	1						
27	3716000000	TUBO SILICONA ALTA Tª Ø 35*27	HIGH SILICON PIPE Tº Ø 35*27	1	1						
	Q881305000	ABRAZADERA 25-40	CLAMP 25-40	2	2						
28	P443042000	REGULADOR 3L VERDE 254.023	REGULATOR 3L GREEN 254.023	1	_						
28	Z601156000	REGULADOR 8L RO. 254.034	REGULATOR 8L RED 254.034	_	1						
29	Z201106000	RACORD EN Y	Y-CONNECTION	_	1						
30	3676900000	TUBO GOMA NEGRA Ø17*10	BLACK RUBBER PIPE Ø17*10	1	1						
	Q901310000	ABRAZADERA ELASTICA 16.8-17.7	ELASTIC CLAMP 16.8-17.7	2	2						
31	T325075000	FIJACIÓN SONDA COMPLETO	COMPLETE PROBE FASTENING	1	1						

MOD.	HORNOS	ZONA	CIRCUITO DE AGUA	PLANO	C-2003

ITEM	CODIGO	DENOMINACION	TEXTO	HEP-10/21	HEP 20/21						NOTAS
32	T115086000	TOBERA 1/8	NOZZLE 1/8	1	1						
	T115093000	TAPON RAMA 12.1X1	BRANCH CAP 12.1X1	_	1						
	Q242030000	ARANDELA ABANICO A5 A.304	FAN WASHER A5 A.304	2	2						
	Q162030000	TUERCA EXAGONAL M5	HEXAGONAL NUT M5	2	2						
33	T325066000	JUNTA FIJACION SONDA	PROBE FASTENING SEAL	1	1						
34	R345020000	TUBO EMPALME GENERADOR	GENERATOR CONNECTION PIPE	1	_						
34	T455029000	TUBO EMPALME GENERADOR	GENERATOR CONNECTION PIPE	_	1						
	Q901313000	ABRAZADERA ELASTICA 62-66	ELASTIC CLAMP 62-66	2	2						
35	3676900000	TUBO GOMA NEGRA Ø17*10	BLACK RUBBER PIPE Ø17*10	_	1						
	Q901310000	ABRAZADERA ELASTICA 16.8-17.7	ELASTIC CLAMP 16.8-17.7	_	2						
36	T325050000	CHIMENEA COMPLETA 10/21 E	COMPLETE FLUEPIPE 10/21 E	1	_						
36	T455006000	CHIMENEA COMPLETA 20/21 E	COMPLETE FLUEPIPE 20/21 E	_	1						
37	T115086000	TOBERA 1/8	NOZZLE 1/8	_	1						
	T115093000	TAPON RAMA 12.1X1	BRANCH CAP 12.1X1	_	1						
	Q242030000	ARANDELA ABANICO A5 A.304	FAN WASHER A5 A.304	_	2						
	Q162030000	TUERCA EXAGONAL M5	HEXAGONAL NUT M5	_	2						

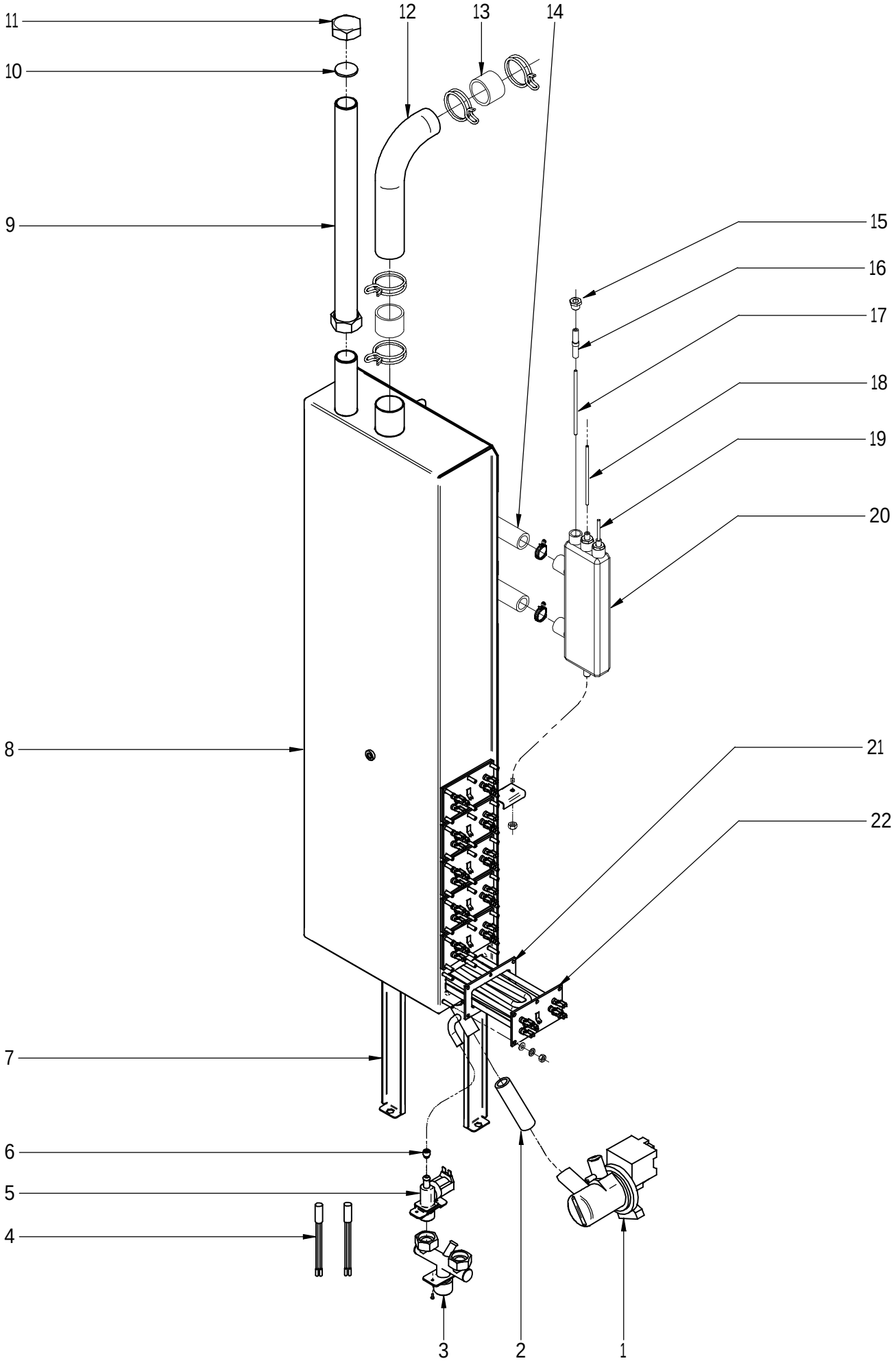

N plano	Firma	Fecha	Aparato		Lamina	
C-2004		2008-04	CIRCUITO DE VAPOR HORNOS HEP10-21; HEP-20/21		11	Fagor Industrial S.Coop. FAGOR Oñate

MOD.	HORNOS	ZONA	CIRCUITO DE VAPOR	PLANO	C-2004

ITEM	CODIGO	DENOMINACION	TEXTO	HEP-10/21	HEP 20/21						NOTAS
1	Z220901000	BOMBA DESAGUE 30W	DRAINAGE PUMP 30W	1	1						
2	3715900000	TUBO SILICONA ALTA Tª Ø 26*18	HIGH SILICON PIPE Tº Ø 26*18	1	1						
	Q901311000	ABRAZAD. ELAST. 26.7-28.1	ELAST. CLAMP 26.7-28.1	2	2						
3	T325063000	ENTRADA AGUA COMPLETA	COMPLETE WATER INLET	1	1						
	Q012021000	TORNILLO EXAGONAL M4x10 A304	HEXAGONAL BOLT M4x10 A304	2	2						
	Q307031000	JUNTA TUBO 14X24X3	PIPE GASKET 14X24X3	2	2						
4	Z233012000	CONDENSAD. ANTIPARASITARIO	ANTIPARASITIC CONDENSER	2	2						
5	Z701135000	ELECTROVALVULA SIMPLE	SIMPLE SOLENOID VALVE	1	1						
6	Z601156000	REGULADOR 8L RO. 254.034	REGULATOR 8L RED 254.034	1	1						
7	T455010000	AMARRE GENERADOR 20-21	GENERATOR FASTENING 20-21	_	2						
	Q232040000	ARANDELA A6	WASHER A6	_	2						
	Q242040000	ARANDELA ABANICO A6 A.304	FAN WASHER A6 A.304	_	2						
	Q162040000	TUERCA EXAGONAL M6	HEXAGONAL NUT M6	_	2						
8	**1100003106**	**KIT GENERAD. VAPOR COM.10/21**	**COM STEAM GENERATOR KIT 1(**	**1**	_						
8	**1100003120**	**KIT GENERAD. VAPOR COM.20/21**	**COM STEAM GENERATOR KIT 2(**	_	**1**						
	Q012042000	TORNILLO EXAGONAL M6x15	HEXAGONAL BOLT M6x15	2	2						
	Q232040000	ARANDELA A6	WASHER A6	2	2						
	Q262040000	ARANDELA GROW. A6 A.304	WASHER GROW. A6 A.304	2	2						
	Q162040000	TUERCA EXAGONAL M6	HEXAGONAL NUT M6	2	2						
	T325053000	AISLANTE GENERADOR 10/21 E	GENERATOR INSULATION 10/21	1	_						
	T455024000	AISLANTE GENERADOR 2021 E	GENERATOR INSULATION 2021 E	_	1						
	T455025000	AISLANTE GENER. SUP. 2021 E	SUPP. GENERATOR INSULATION	_	1						
9	T455026000	EMPALME DESINCRUSTANTE	SCALE REMOVER CONNECTION	_	1						
10	R015011000	ARANDELA Ø32	WASHER Ø32	1	1						
11	R015010000	TUERCA TAPON 1"	PLUG NUT 1"	1	1						
12	T455023000	ENTRADA VAPOR HEM 20/21	VAPOUR INLET HEM 20/21	_	1						
13	3715800000	TUBO SILICONA ALTA Tº Ø 43*51	HIGH SILICON PIPE Tº Ø 43*51	1	1						
	Q901312000	ABRAZADERA ELASTICA 50.6-53.2	ELASTIC CLAMP 50.6-53.2	2	2						
14	3715900000	TUBO SILICONA ALTA Tª Ø 26*18	HIGH SILICON PIPE Tº Ø 26*18	1	1						
	Q901311000	ABRAZAD. ELAST. 26.7-28.1	ELAST. CLAMP 26.7-28.1	2	2						
15	R345058000	RACORD	CONNECTION	3	3						

MOD.	HORNOS	ZONA	CIRCUITO DE VAPOR	PLANO	C-2004

ITEM	CODIGO	DENOMINACION	TEXTO	HEP-10/21	HEP 20/21						NOTAS
16	R345059000	GUIA AISLANTE	INSULATION GUIDE	3	3						
17	R345063000	ELECTRODO NIVEL BAJO	LOW LEVEL ELECTRODE	1	1						
18	R345060000	ELECTRODO NIVEL ALTO	HIGH LEVEL ELECTRODE	1	1						
19	R345064000	ELECTRODO DE MASA	EARTH ELECTRODE	1	1						
20	T325077000	BOTE DE NIVELES	LEVELS VESSEL	1	1						
	Q228051000	TUERCA EXAGONAL M8 PLASTICO	HEXAGONAL NUT M8 PLASTIC	1	1						
21	T323007000	JUNTA RESISTENCIA CALDERIN	BOILER RESISTOR SEAL	3	6						
22	T323006000	RESISTENCIA 3x3000W 230V	RESISTOR 3x3000W 230V	1	1						
22	T323038000	RESISTENCIA 3x3000W 230V	RESISTOR 3x3000W 230V	2	5						
	Q232030000	ARANDELA A5	WASHER A5	18	36						
	Q242030000	ARANDELA ABANICO A5 A.304	FAN WASHER A5 A.304	18	36						
	Q162030000	TUERCA EXAGONAL M5	HEXAGONAL NUT M5	18	36						

N.plano	C-2005
Firma	
Fecha	2008-04
Aparato	HORNOS HEP-10/21; HEP-20/21
	PARTE ELECTRICA PORTAMANDOS
Lamina	12

Fagor Industrial S.Coop.
Oñate

FAGOR

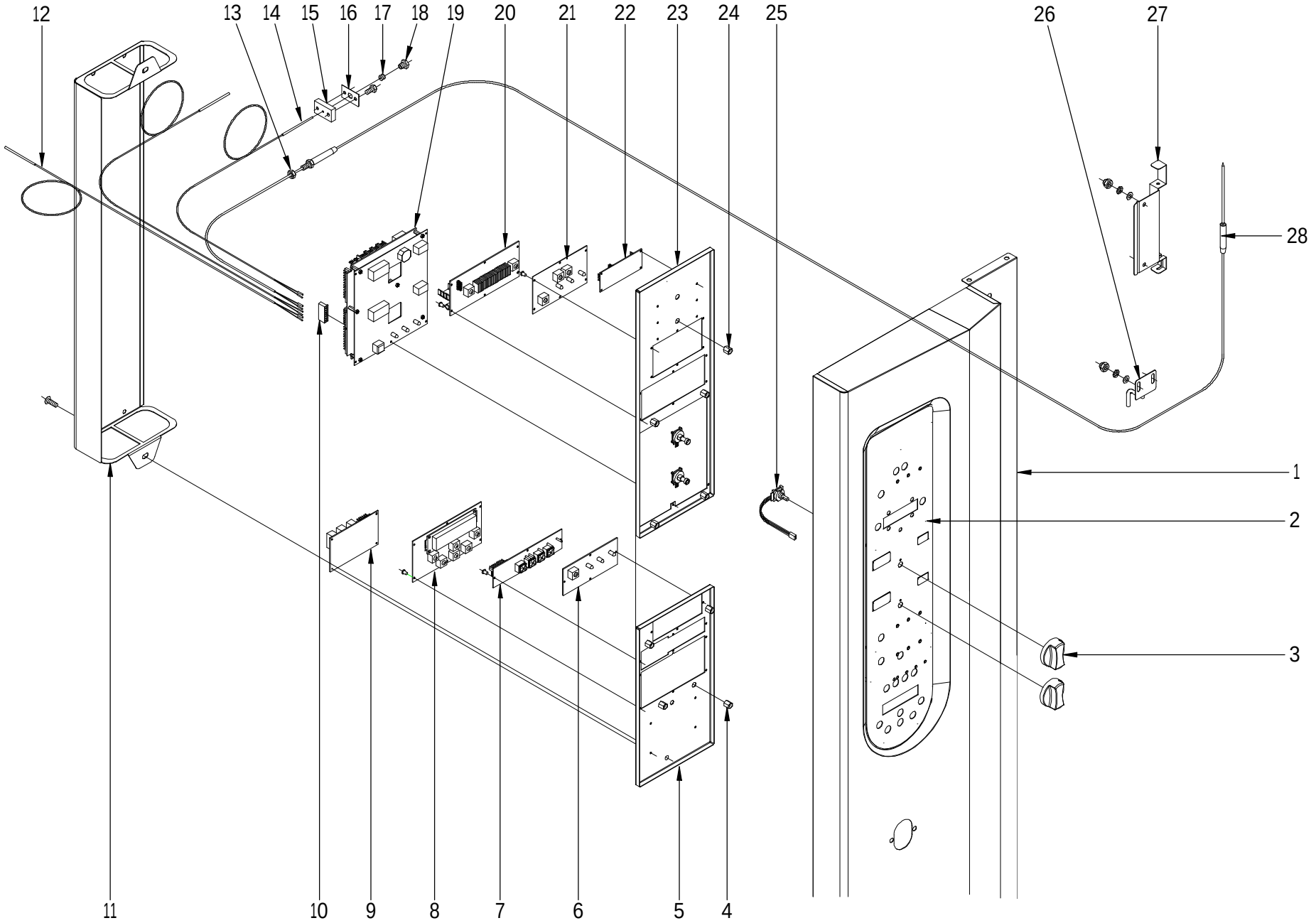

MOD.	HORNOS	ZONA	PARTE ELECTRICA PORTAMANDOS	PLANO	2005

ITEM	CODIGO	DENOMINACION	TEXTO	HEP-10/21	HEP 20/21						NOTAS
1	T322815000	PANEL PORTAMANDOS COM 10/21	CONTROL HOLDER PANEL 10/21	1	_						
1	T452800000	PANEL PORTAMANDOS COM 20/21	CONTROL HOLDER PANEL 20/21	_	1						
	Q412005000	REMACHE AVINOX Ø3,2x6mm	RIVET AVINOX Ø3.2x6mm	44	44						
	P613014000	TAPON PUERTO SERIE PROG.	PROG. SERIES PORT PLUG.	1	1						
2	T333001000	SERIGRAFIA HEP-10/11 10/21	SERIGRAPHY HEP-10/11 10/21	1	1						
3	T303011000	BOTÓN DE MANDO COMPLETO	COMPLETE CONTROL BUTTON	2	2						
4	T302829000	DISTANCIADOR COMPONENTES	SPACER COMPONENTS	4	4						
	Q232030000	ARANDELA A5	WASHER A5	4	4						
	Q242030000	ARANDELA ABANICO A5 A.304	FAN WASHER A5 A.304	4	4						
	Q163030000	TUERCA EXAGONAL M5 LATON	HEXAGONAL NUT M5 BRASS	4	4						
5	T332805000	SOP. CIRCUITOS PROGRAMADOR	SUP. CIRCUIT PROGRAMMER	1	1						
6	T333002000	CIRCUITO SELECTOR VELOCIDAD	SPEED SELECTOR CIRCUIT	1	1						
7	T303019000	CIRCUITO TECLADO HGV	HGV KEYBOARD CIRCUIT	1	1						
	R663036000	FIJACION CIRCUITO	CIRCUIT ATTACHMENT	12	12						
8	T333015000	CIRCUITO PROGRAMADOR 2008	PROGRAMMER CIRCUIT 2008	1	1						
9	T333006000	CIRC. SELEC. VELOCIDAD RELES	SPEED SELE. CIRCUIT RELAYS	1	1						
10	T303045000	CONECTOR PASO 3,96 MM. 8 VIAS	STEP CONNECTOR 3.96 MM8 WA	1	1						
11	T333013000	PROTECCION CIRCUITOS	CIRCUIT PROTECTION	1	1						
	T323027000	PTC ELECTROVALVULA 5 SEG	PTC SOLENOID VALVE 5 SEC	1	1						
	Q242030000	ARANDELA ABANICO A5 A.304	FAN WASHER A5 A.304	1	1						
	Q012031000	TORNILLO EXAGONAL M5x10 A304	HEXAGONAL BOLT M5x10 A304	1	1						
	Q221342000	REMACHE EXAGONAL M5	HEXAGONAL RIVET M5	1	1						
12	T323024000	CONJ. TERMOPAR VAPOR 10/21	STEAM THERMOCOUPLE UNIT 1(	2	2						
13	Q162050000	TUERCA EXAGONAL M8x1 INOX.	HEXAGONAL NUT M8x1 INOX.	1	1						
14	T323011000	CONJUNTO TERMOPAR CAMARA	THERMOCOUPLE UNIT CHAMB.	1	1						
15	T112625000	BASE CIERRE SONDA	PROBE LOCK BASE	1	1						
16	R692812000	JUNTA PASAMUROS SIMPLE	SIMPLE FEEDTHROUGH SEAL	1	1						
	Q012021000	TORNILLO EXAGONAL M4x10	HEXAGONAL BOLT M4x10	2	2						
17	R662652000	BICONO CIERRE SONDA	PROBE CLOSING BICONE	1	1						
18	R662629000	RACORD CIERRE SONDA	PROBE CLOSING CONNECTION	1	1						
19	T303070000	CONTROLADOR MEDIA ALTA 2008	MEDIUM HIGH CONTROL. 2008	1	1						

MOD.	HORNOS	ZONA	PARTE ELECTRICA PORTAMANDOS	PLANO	2005

ITEM	CODIGO	DENOMINACION	TEXTO	HEP-10/21	HEP 20/21						NOTAS
20	T323013000	CIRCUITO CONTROL HUMEDAD	HUMIDITY CONTROL CIRCUIT	1	1						
21	T333003000	CIRCUITO SELECTOR MODO	MODE SELECTOR CIRCUIT	1	1						
22	T303049000	CIRCUITO S.N.M.P.	S.N.M.P. CIRCUIT	1	1						
23	T332804000	SOPORTE PROGRAM COMPLETO	COMPLETE PROGRAMME SUPPO	1	1						
24	T302829000	DISTANCIADOR COMPONENTES	SPACER COMPONENTS	5	5						
	Q232030000	ARANDELA A5	WASHER A5	4	4						
	Q242030000	ARANDELA ABANICO A5 A.304	FAN WASHER A5 A.304	4	4						
	Q163030000	TUERCA EXAGONAL M5 LATON	HEXAGONAL NUT M5 BRASS	4	4						
25	T303022000	SELECTOR ENCODER	ENCODER SELECTOR	2	2						
	Z953041000	TUERCA M.10x1 EGO 00.00600.075	NUT M.10x1 EGO 00.00600.075	2	2						
26	T302646000	TENSOR PINCHO COMPLETO	COMPLETE SPIKE TENSOR	1	1						
	Q232030000	ARANDELA A5	WASHER A5	2	2						
	Q242030000	ARANDELA ABANICO A5 A.304	FAN WASHER A5 A.304	2	2						
	Q162030000	TUERCA EXAGONAL M5	HEXAGONAL NUT M5	2	2						
27	T302644000	SOPORTE SONDA	PROBE SUPPORT	1	1						
	Q232030000	ARANDELA A5	WASHER A5	2	2						
	Q242030000	ARANDELA ABANICO A5 A.304	FAN WASHER A5 A.304	2	2						
	Q162030000	TUERCA EXAGONAL M5	HEXAGONAL NUT M5	2	2						
28	T333004000	CONJUNTO SONDA NUCLEO 6 P.	CORE PROBE UNIT 6 P.	1	1						

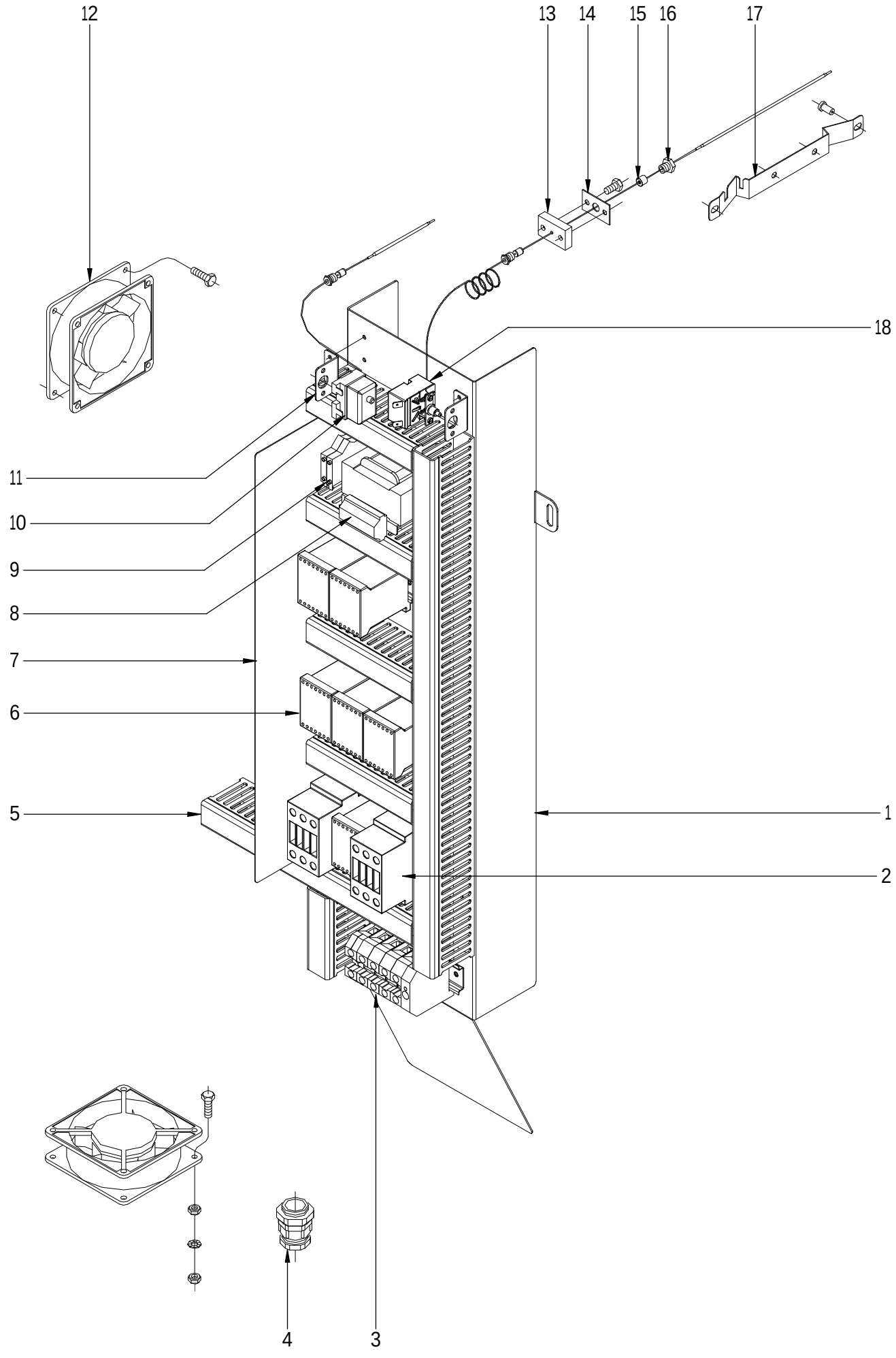

N plano	Firma	Fecha	Aparato		Lamina	
C-2006		2008-04	CUADRO ELECTRICO HORNO HEP-10/21		13	Fagor Industrial S.Coop. Oñate

MOD.	HORNOS	ZONA	CUADRO ELECTRICO	PLANO	C-2006

ITEM	CODIGO	DENOMINACION	TEXTO	HEP-10/21							NOTAS
1	T333012000	CHAPA CUADRO HEP 10/21	SQUARE PLATE HEP 10/21	1							
	Q262040000	ARAND.GROW. A6 A.304	WASHER GROW. A6 A.304	2							
	Q162040000	TUERCA EXAGONAL M6	HEXAGONAL NUT M6	2							
	Q221342000	REMACHE EXAGONAL M5	HEXAGONAL RIVET M5	2							
	Q242030000	ARANDELA ABANICO A5 A.304	FAN WASHER A5 A.304	2							
	Q012032000	TORNILLO EXAGONAL M5x15 A304	HEXAGONAL BOLT M5x15 A304	2							
2	X183011000	CON.3RT1024-1AN20 230V 50H	CON.3RT1024-1AN20 230V 50H	2							
3	Z103035000	BORNA TIERRA 35MM	EARTH TERMINAL 35MM	1							
	R263003000	BORNA PASO 35MM	THROUGH TERMINAL 35MM	3							
	R673010000	BORNA PASO AZUL 35MM	THROUGH TERMINAL BLUE 35MM	1							
	Z683096000	TOPE FINAL WEW35 10590.0	END STOP WEW35 10590.0	1							
	R663055000	GUIA CONTACTOR L-120	CONTACTOR GUIDE L-120	1							
	Q221341000	REMACHE EXAGONAL M4	HEXAGONAL RIVET M4	2							
	Q012021000	TORNILLO EXAGONAL M4x10 A304	HEXAGONAL BOLT M4x10 A304	2							
4	R033002000	PRENSA ESTOPAS	STUFFING BOX	1							
	R033025000	CONTRATUERCA (GAES)	COUNTERNUT (GAES)	1							
5	3715520000	CANALETA UNEX 60.30.77 / 0,12	PIPING UNEX 60.30.77 / 0.12	7							
5	3715520000	CANALETA UNEX 60.30.77 / 1,15	PIPING UNEX 60.30.77 / 1.15	1							
5	3715520000	CANALETA UNEX 60.30.77 / 0,35	PIPING UNEX 60.30.77 / 0.35	1							
6	Z743009000	CONTAC. SIRIUS 3RT10 16-2AP02	CONT. SIRIUS 3RT10 16-2AP02	6							
	T303053000	UNION CONTACTORES DE INVER.	INVER. CONTACTOR UNION	1							
	Z403016000	GUIA CONTACTOR L-100	CONTACTOR GUIDE L-100	1							
	Z103084000	GUIA CONTACTOR L-138 "	CONTACTOR GUIDE L-138 "	2							
7	T332604000	CHAPA DIRECCIONAMIENTO AIRE	AIR GUIDE PLATE	1							
8	R503005000	TRANSFORMADOR	TRANSFORMER	1							
	Q221341000	REMACHE EXAGONAL M4	HEXAGONAL RIVET M4	4							
	Q012021000	TORNILLO EXAGONAL M4x10 A304	HEXAGONAL BOLT M4x10 A304	4							
9	R073005000	BORNAS PORTA FUSIBLES	FUSE HOLDER TERMINALS	2							
	Z123018000	GUIA CONTACTOR L-55	CONTACTOR GUIDE L-55	1							
	P184011000	CARTUCHO FUSIBLE 4.A	FUSE CARTRIDGE 4.A	2							

MOD.	HORNOS	ZONA	CUADRO ELECTRICO	PLANO	C-2006

ITEM	CODIGO	DENOMINACION	TEXTO	HEP-10/21							NOTAS
10	Z953035000	TERMOSTATO LIMITADOR AVISO	LIMITER THERMOSTAT WARNI.	1							
	Z953041000	TUERCA M.10x1 EGO 00.00600.075	NUT M.10x1 EGO 00.00600.075	1							
11	R343039000	SOPORTE TERMOS VAPOR	STEAM THERMOSTAT SUPPOR.	2							
12	Z103066000	VENTILADOR 230V.50-60HZ	FAN 230V.50-60HZ	2							
	Q242020000	ARANDELA ABANICO A4 A.304	FAN WASHER A4 A.304	4							
	Q012021000	TORNILLO EXAGONAL M4x10 A304	HEXAGONAL BOLT M4x10 A304	6							
	Q162020000	TUERCA EXAGONAL M4	HEXAGONAL NUT M4	4							
S/Nº	T113015000	PROTECCION VENTILADOR	FAN PROTECTION	1							
	Q418022000	REMACHE DE NYLON 4x15	NYLON RIVET 4x15	4							
13	T112625000	BASE CIERRE SONDA	PROBE LOCK BASE	1							
14	R692812000	JUNTA PASAMUROS SIMPLE	SIMPLE FEEDTHROUGH SEAL	1							
	Q012021000	TORNILLO EXAGONAL M4x10	HEXAGONAL BOLT M4x10	2							
15	R662662000	JUNTA CIERRE BULBO LIMITADOR	BULB LIMITER CLOSING SEAL	1							
16	R662629000	RACORD CIERRE SONDA	PROBE CLOSING CONNECTION	1							
17	R662683000	SOPORTE BULBO	BULB SUPPORT	1							
	Q412002000	REMACHE AVINOX Ø4x10mm	RIVET AVINOX Ø4x10mm	3							
18	T303009000	TERMOSTATO LIMITADOR	THERMOSTAT LIMITER	1							

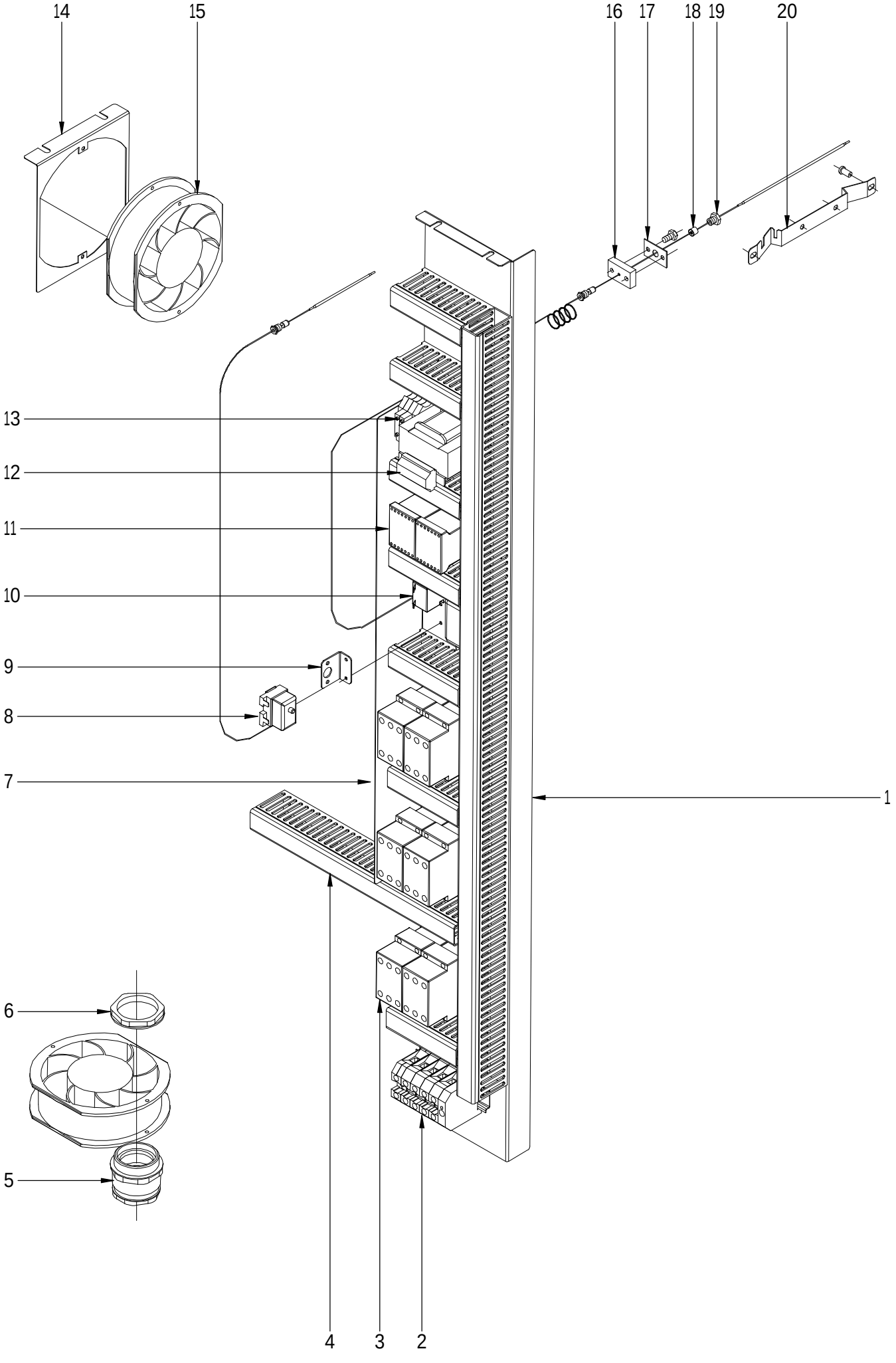

N plano	Firma	Fecha	Aparato	Lamina	
C-2007		2008-04	CUADRO ELECTRICO HORNO HEP-20/21	14	Fagor Industrial S.Coop. FAGOR Oñate

MOD.	HORNOS	ZONA	CUADRO ELECTRICO	PLANO	C-2007

ITEM	CODIGO	DENOMINACION	TEXTO	HEP 20/21							NOTAS
1	T453003000	CUADRO ELECTRICO 20/21 E	ELECTRICAL PANEL 20/21 E	1							
	Q262040000	ARAND.GROW. A6 A.304	WASHER GROW. A6 A.304	2							
	Q162040000	TUERCA EXAGONAL M6	HEXAGONAL NUT M6	2							
	Q221342000	REMACHE EXAGONAL M5	HEXAGONAL RIVET M5	2							
	Q242030000	ARANDELA ABANICO A5 A.304	FAN WASHER A5 A.304	2							
	Q012032000	TORNILLO EXAGONAL M5x15 A304	HEXAGONAL BOLT M5x15 A304	2							
2	Z103035000	BORNA TIERRA 35MM	EARTH TERMINAL 35MM	1							
	R143011000	BORNA WDU-70/N REF.951219	TERMINAL WDU-70/N REF.951219	3							
	R143012000	BORNA WDU-70/N AZUL RE.951242	TERMINAL WDU-70/N BLUE REF.	1							
	Z683096000	TOPE FINAL WEW35 10590.0	END STOP WEW35 10590.0	1							
	R663055000	GUIA CONTACTOR L-120	CONTACTOR GUIDE L-120	1							
	Q221341000	REMACHE EXAGONAL M4	HEXAGONAL RIVET M4	2							
	Q012021000	TORNILLO EXAGONAL M4x10 A304	HEXAGONAL BOLT M4x10 A304	2							
3	T453016000	CONTACTOR 50A 3RT1034-1AL20	CONTACTOR 50A 3RT1034-1AL20	6							
	T303053000	UNION CONTACTORES DE INVER.	INVER. CONTACTOR UNION	1							
	Z403016000	GUIA CONTACTOR L-100	CONTACTOR GUIDE L-100	3							
4	3715520000	CANALETA UNEX 60.30.77 / 0,12	PIPING UNEX 60.30.77 / 0.12	7							
4	3715520000	CANALETA UNEX 60.30.77 / 1,15	PIPING UNEX 60.30.77 / 1.15	1							
4	3715520000	CANALETA UNEX 60.30.77 / 0,35	PIPING UNEX 60.30.77 / 0.35	1							
5	Z312941000	PRENSA ESTOPAS PG42	STUFFING BOX PG42	1							
6	Z312943000	CONTRATUERCA PG42	COUNTERNUT PG42	1							
7	T453006000	CHAPA PROTECCION CUADRO	SQUARE PROTECTION PLATE	1							
8	Z953035000	TERMOSTATO LIMITADOR AVISO	LIMITER THERMOSTAT WARNING	1							
	Z953041000	TUERCA M.10x1 EGO 00.00600.075	NUT M.10x1 EGO 00.00600.075	1							
9	R343039000	SOPORTE TERMOS VAPOR	STEAM THERMOSTAT SUPPORT	2							
10	T303009000	TERMOSTATO LIMITADOR	THERMOSTAT LIMITER	1							
11	Z743009000	CONT. SIRIUS 3RT10 16-2AP02	SIRIUS 3RT10 16-2AP02 CONT.	2							
	Z403016000	GUIA CONTACTOR L-100	CONTACTOR GUIDE L-100	1							
12	R503005000	TRANSFORMADOR	TRANSFORMER	1							
	Q221341000	REMACHE EXAGONAL M4	HEXAGONAL RIVET M4	4							
	Q012021000	TORNILLO EXAGONAL M4x10 A304	HEXAGONAL BOLT M4x10 A304	4							

MOD.	HORNOS	ZONA	CUADRO ELECTRICO	PLANO	C-2007

ITEM	CODIGO	DENOMINACION	TEXTO	HEP 20/21							NOTAS
13	R073005000	BORNAS PORTA FUSIBLES	FUSE HOLDER TERMINALS	2							
	Z263303000	TOPE FINAL	END STOP	2							
	P184011000	CARTUCHO FUSIBLE 4.A	FUSE CARTRIDGE 4.A	2							
	R663055000	GUIA CONTACTOR L-120	CONTACTOR GUIDE L-120	1							
14	T453008000	CHAPA AMARRE VENTILADOR 20	FAN FASTENING PLATE 20	1							
15	T453005000	VENTILADOR 230V. 20/21	FAN 230V. 20/21	2							
	Q242020000	ARANDELA ABANICO A4 A.304	FAN WASHER A4 A.304	8							
	Q012021000	TORNILLO EXAGONAL M4x10 A304	HEXAGONAL BOLT M4x10 A304	8							
	Q162020000	TUERCA EXAGONAL M4	HEXAGONAL NUT M4	8							
16	T112625000	BASE CIERRE SONDA	PROBE LOCK BASE	1							
17	R692812000	JUNTA PASAMUROS SIMPLE	SIMPLE FEEDTHROUGH SEAL	1							
	Q012021000	TORNILLO EXAGONAL M4x10	HEXAGONAL BOLT M4x10	2							
18	R662662000	JUNTA CIERRE BULBO LIMITADOR	BULB LIMITER CLOSING SEAL	1							
19	R662629000	RACORD CIERRE SONDA	PROBE CLOSING CONNECTION	1							
20	R662683000	SOPORTE BULBO	BULB SUPPORT	1							
	Q412002000	REMACHE AVINOX Ø4x10mm	RIVET AVINOX Ø4x10mm	3							

MOD.	HORNOS	ZONA	VARIOS	PLANO	

ITEM	CODIGO	DENOMINACION	TEXTO	HEP-10/21	HEP 20/21						
	T326500000	MANUAL DE INSTRUC. ESPAÑOL	INSTRUCT. MANUAL SPANISH	1	1						
	T326501000	MANUAL DE INSTRUC. ALEMAN	INSTRUCT. MANUAL GERMAN	1	1						
	T326506000	MANUAL DE INSTRUC. FRANCES	INSTRUCT. MANUAL FRENCH	1	1						
	T326507000	MANUAL DE INSTRUC. INGLES	INSTRUCT. MANUAL ENGLISH	1	1						
	T326508000	MANUAL DE INSTRUC. ITALIANO	INSTRUCT. MANUAL ITALIAN	1	1						
	T323032000	ESQUEMA TEORICO HEM 10-21	THEORETICAL DIAGRAM HEM 10	1	_						PLANO HC-78236
	T453012000	ESQUEMA TEORICO HEM 20-21	THEORETICAL DIAGRAM HEM 20	_	1						PLANO HC-78009
	T323033000	PLANO MONTAJE HEM 10-21	ASSEMBLY PLAN HEM 10-21	1	_						PLANO HD-13009
	T453014000	PLANO MONTAJE HEM 20/21	ASSEMBLY PLAN HEM 20/21	_	1						PLANO HD-12969
	T303042000	LEYENDA HORNOS	OVEN LEGEND	1	1						PLANO HC-76970
	T303028000	CABLEADO CONTROLAD. CIRC.LE	CONTROLLED WIRING LE CIRCU	1	1						
	T303030000	CABLEADO CONTROL-POTENCIO.	CONTROL WIRING- POTENTIOMI	1	1						
	T303031000	CABLEADO LUZ INTERIOR HVG10-	INTERIOR LIGHT WIRING HVG10	1	_						
	T493010000	CABLEADO LUZ INTERIOR 20-21	INTERIOR LIGHT WIRING 20-21	_	1						
	T323028000	INSTALACION ELECTR. HEP 10-21	ELEC. INSTALLATION HEP 10-21	1	_						
	T453013000	INSTALACION ELECTR. HEM 20/21	ELEC. INSTALLATION HEM20/21	_	1						
	T323036000	CABLEADO RESISTEN. HEM10-21	RESISTOR WIRING HEM10-21	1	_						
	T453015000	CABLEADO RESISTEN. HEM20-21	RESISTOR WIRING HEM20-21	_	1						
	T323029000	CABLEADO FUERZA HEP 10-21	POWER WIRING HEP 10-21	1	_						
	T453011000	CABLEADO FUERZA HEM 20/21	POWER WIRING HEM 20/21	_	1						
	T333007000	CABLEADO SEL. VELOCIDAD HEP	SPEED SEL. WIRING HEP	1	1						
	T333008000	CABLEADO SELECT. MODO HEP	MODE SEL. WIRING HEP	1	1						
	T333010000	CABLEADO CIRCUITO SNMP	CIRCUIT WIRING SNMP	1	1						
	T303029000	CABLEADO CONTROL-PROGRAMAD	CONTROL WIRING- PROGRAMMI	2	2						
	T303052000	CAB. CONTRLDR-CONCTR HACCP	CONTROLLER-CONTACTOR WIR	1	1						
	T333009000	CABLEADO LAVADO HEP	WASH WIRING HEP	1	1						
	T303050000	MEMORY CARD HACCP	MEMORY CARD HACCP	1	1						
	T303067000	CD HACCP	CD HACCP	1	1						
	T306513000	MANUAL INSTAL. Y USO HACCP	MANUAL INSTAL. AND USE HACC	1	1						
	EA62080010	DETERGENTE BOOST 8 KG.	DETERGENTE BOOST 8 KG.	1	1						

MOD.	HORNOS	ZONA	CAMBIOS PARA PASAR DE (380-415V. 50Hz) A (380-415V. 60Hz)	PLANO	

ITEM	CODIGO	DENOMINACION	TEXTO	HEP 20/21							
		PIEZAS A ELIMINAR	**PARTS TO BE REMOVED**								
11	Z220901000	BOMBA DESAGUE 30W	DRAINAGE PUMP 30W	1							C-2003
	T326502000	ETIQUETA380.415V 50H	LABEL 380.415V 50H	1							
		PIEZAS A INTRODUCIR	**PARTS TO BE INCLUDED**								
11	Z223501000	BOMBA DE DESAGUE 30W 60HZ	DRAINAGE PUMP 30W 60HZ	1							C-2003
	T326504000	ETIQUETA 380.415V 3N 60HZ	LABEL 380.415V 3N 60HZ	1							
	T322607000	REDUCC. CUBREVENT. 60HzØ160	FANCOVER REDUC. 60HzØ160	2							C-1999

HEM 10 / 21 HEP 10/21

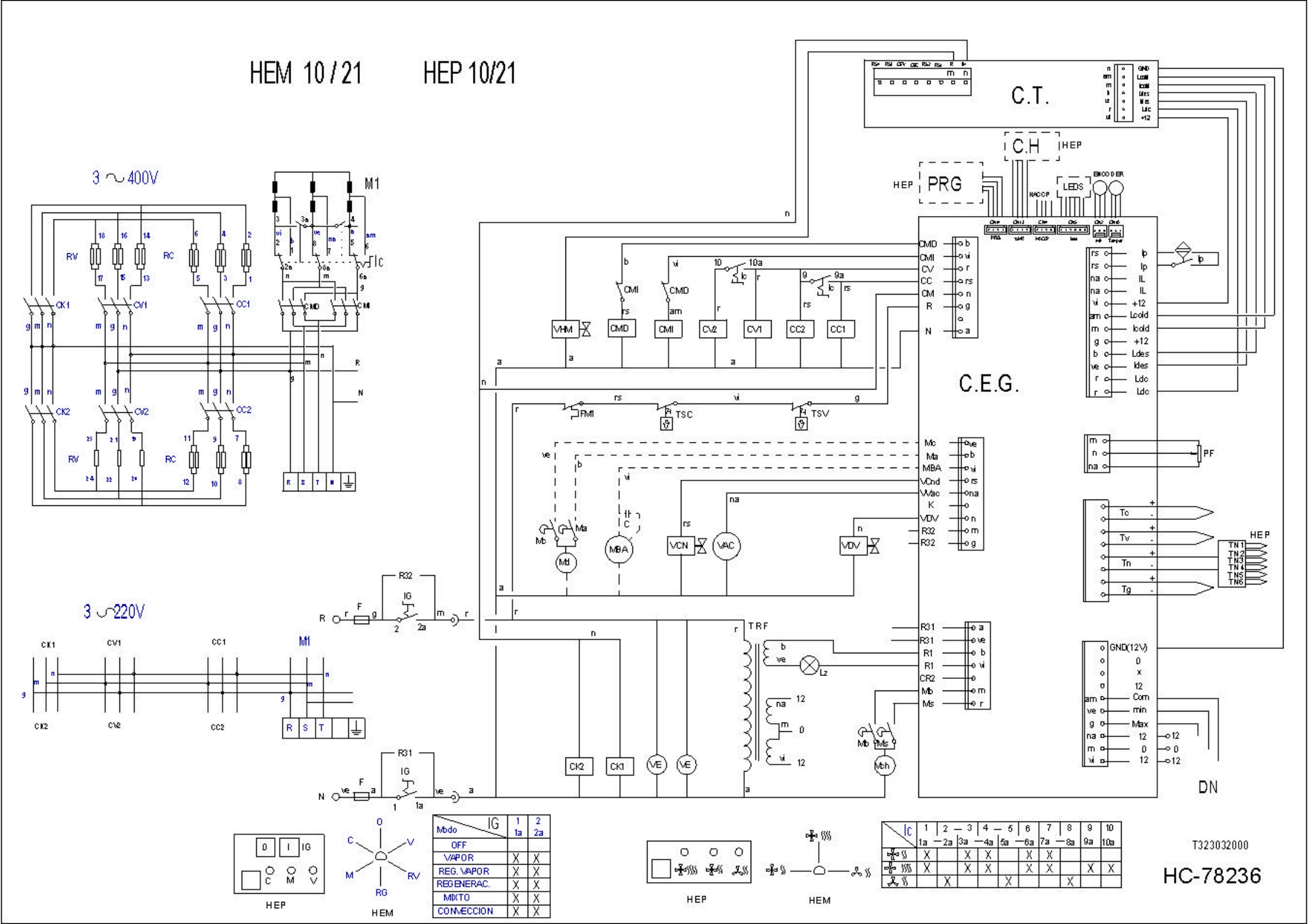

HEM 20 / 21 HEP 20/21

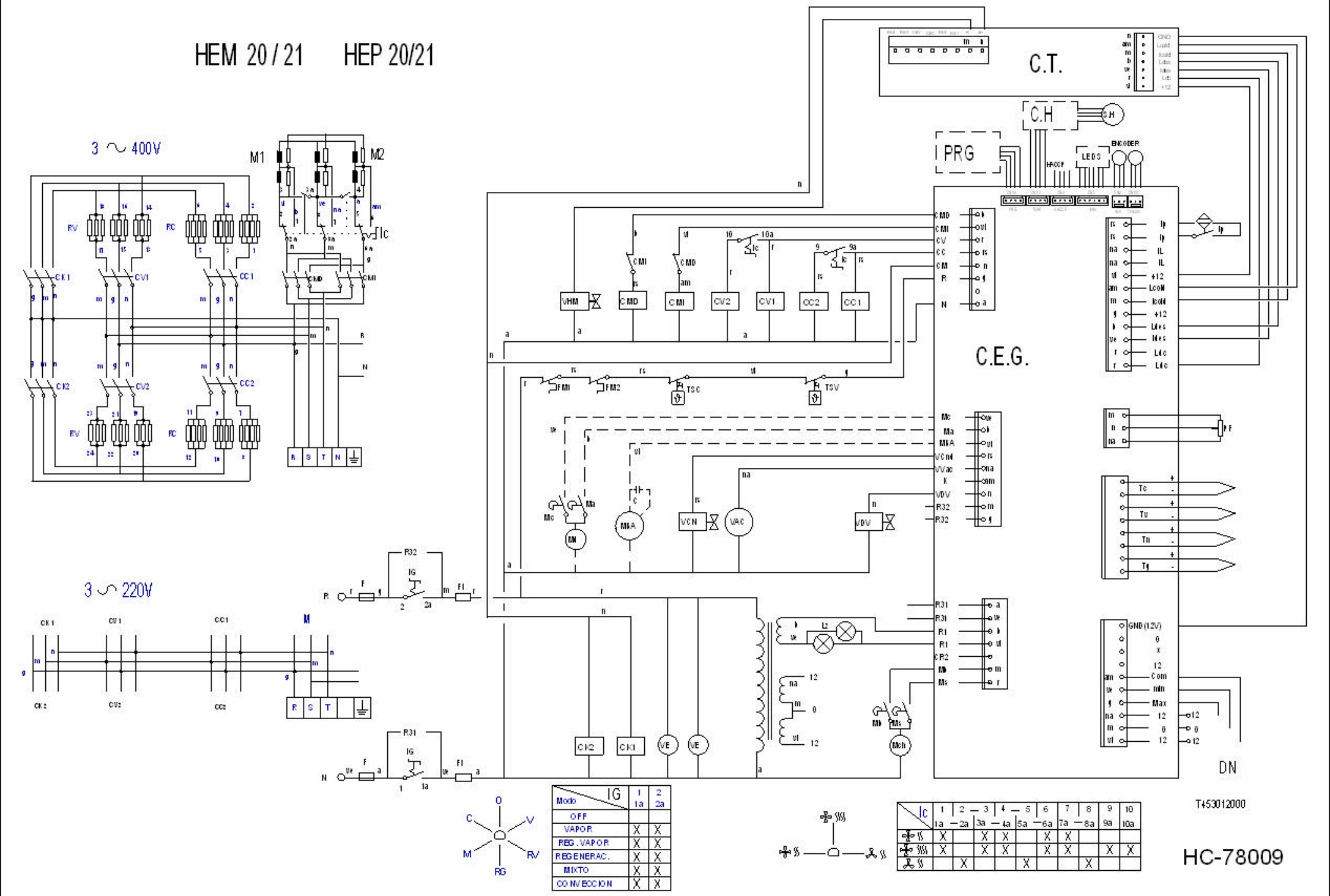

Modo \ IG	I 1a	2 2a
OFF		
VAPOR	X	X
REG. VAPOR	X	X
REGENERAC.	X	X
MIXTO	X	X
CONVECCION	X	X

Ic	1 1a	2 — 2a	3 3a	4 — 4a	5 5a	6 — 6a	7 7a	8 — 8a	9 9a	10 10a
	X		X	X		X	X			
	X		X	X		X	X		X	X
		X			X			X		

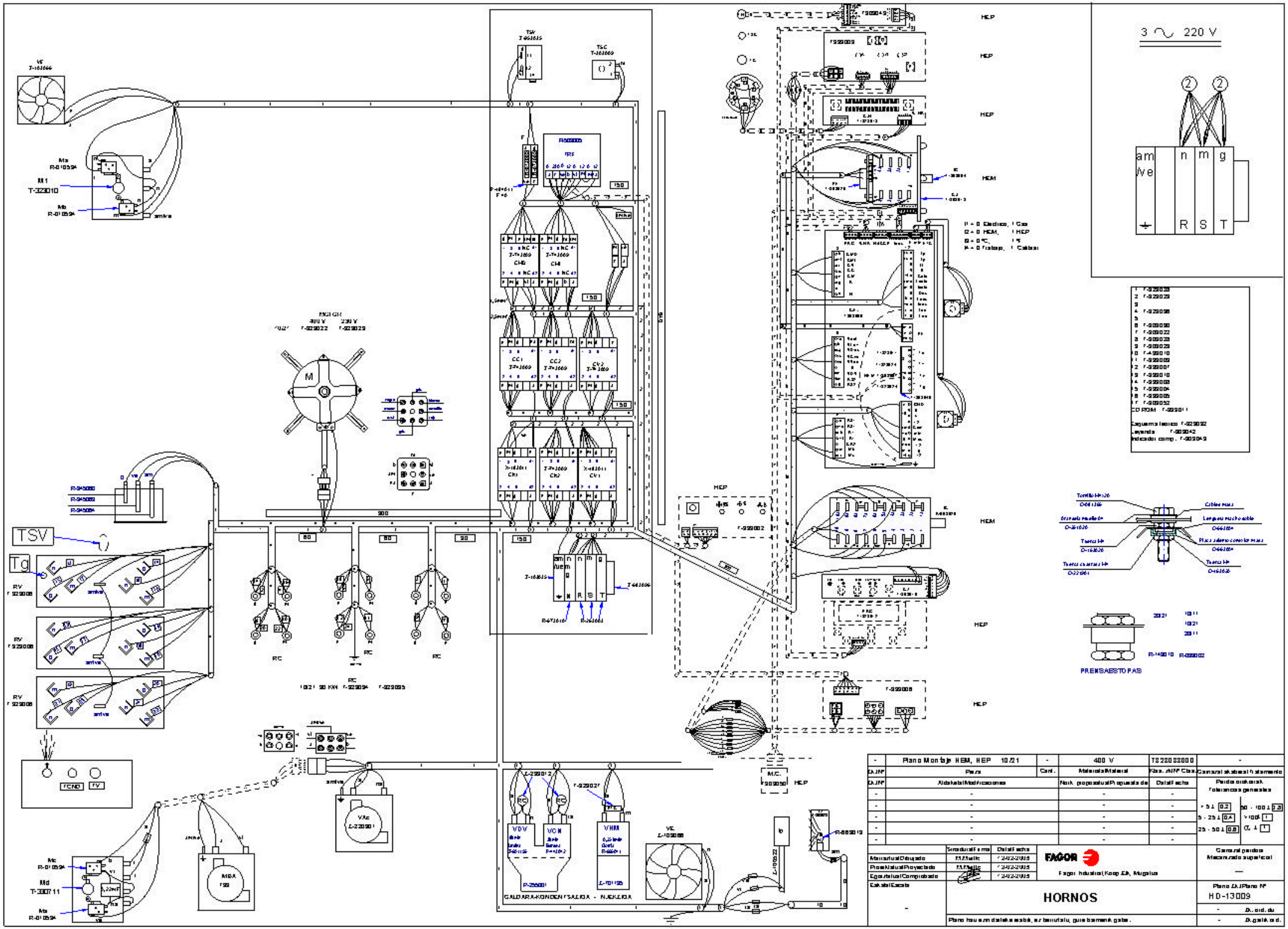

3 ∿ 220 V
am
/ve
n
m
g
R
S
T
HEP
HEM
TSV
Tg
RV
RC
M1
T-323010
Mc
R-010594
Md
T-330711
Ma
R-010594
VAc
L-220901
MBA
VDV
VCN
VHM
VE
L-109088
M.C.
GALDARA-KONDENTSALIDA - NJEKLIDA
PRENSAESTOPAS
Esquema teorico T-929092
Leyenda T-909042
Indicador comp. T-909049
Plano Montaje HEM, HEP 10/21
400 V
TS23033000
Pieza
Material/Material
Aldakaia/Modificaciones
Nork. proposatua/Propuesta de
Data/Fecha
Manzatua/Dibujado
Proiektua/Proyectado
Egoztatua/Comprobado
Eskala/Escala
FAGOR
Fagor Industrial, Koop.Elk, Mugatua
HORNOS
Plano Ok./Plano Nº
HD-13009

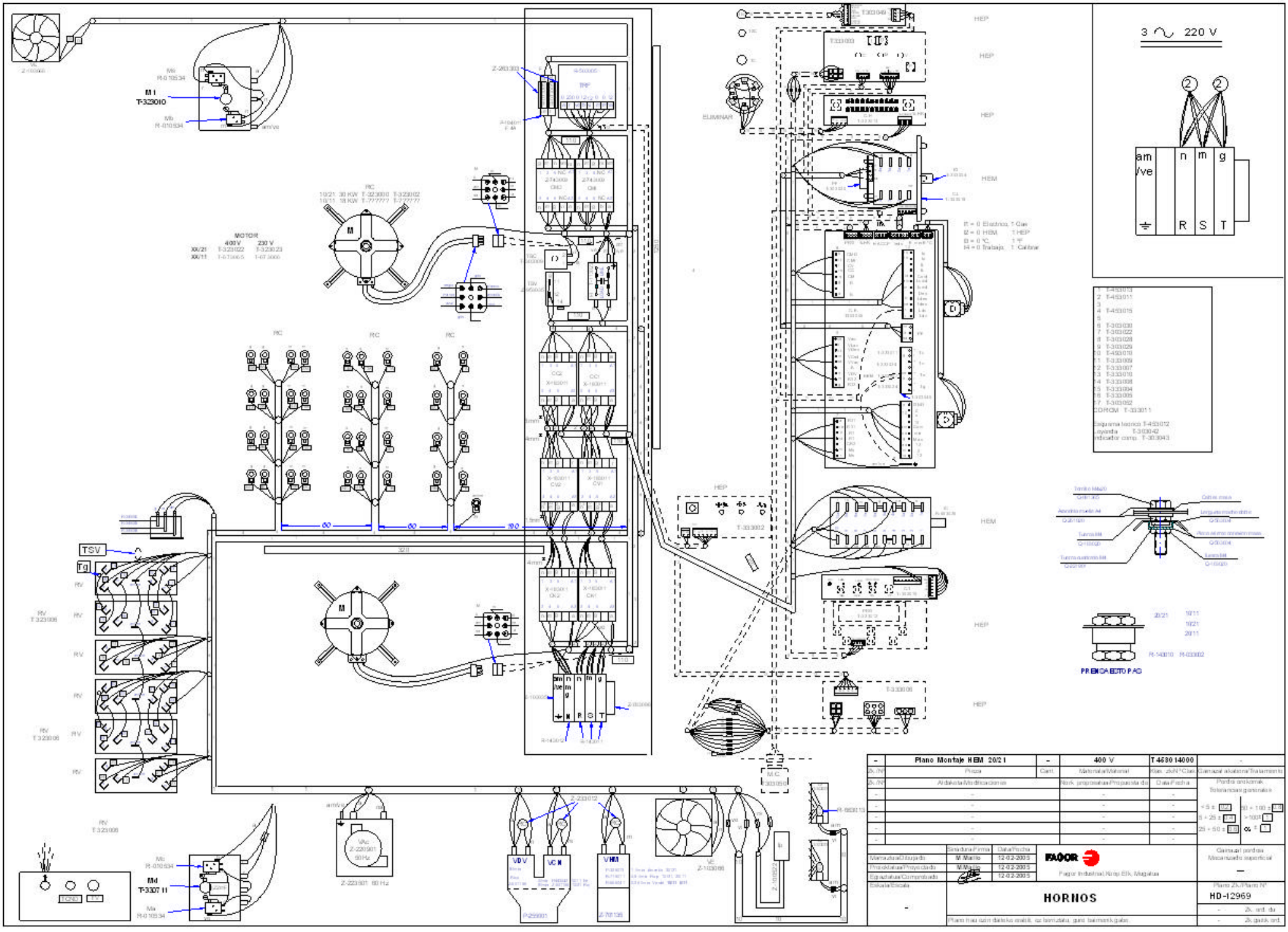
3 ∿ 220 V
am /ve
n
m
g
R
S
T
MOTOR
400 V
230 V
M1
T-323010
Md
T-3307 11
TSV
Tg
RV
RC
HEP
HEM
ELIMINAR
PRENSA ESTOPAS
Z-223501 60 Hz
VDV
VCN
VHM
M.C.
Plano Montaje HEM 20/21
400 V
T 4580 14000
Gamazal alcalina/Tratamiento
Pedro Ochoa
Manuel Murillo
12-02-2005
FAGOR
Fagor Industrial, Koop. Erk. Mugatua
HORNOS
HD-12969

	ESPAÑOL	FRANÇAIS	ENGLISH	DEUTSCH	ITALIENO
BEC :	Bujia Encendido Cámara	Bougie Allumage Chambre	Chamber Spark Plug	Zündkerze Einschalten Garraum	Candela di Accensione Camera
BEV :	Bujia Encendido Caldera	Bougie Allumage Chaudière	Boiler Spark Plug	Zündkerze Einschalten Boile	Candela di Accensione Caldaia
C.E.C :	Control Combustión Cámara	Contrôle Combustion Chambre	Chamber Combustion Control	Steuerung Verbrennung Garraum	Controllo Combustione Camera
C.E.G :	Control Electrónico General	Contrôle Électronique Général	Main Electronic Control	Steuerung Elektronik allgemein	Controllo Elettronico Generale
C.E.V :	Control Combustión Caldera	Contrôle Combustion Chaudière	Boiler Combustion Control	Steuerung Verbrennung Boiler	Controllo Combustione Caldaia
C.H :	Circuito Humedad	Circuit Humidité	Humidity Circuit	Kreislauf Feuchtigkeit	Circuito Umidità
C.L :	Circuito Leds	Circuit LEDs	Led Circuit	Kreislauf LEDs	Circuito Leds
C.T :	Circuito Teclado	Circuit Clavier	Keypad Circuit	Kreislauf Tastatur	Circuito Tastiera
CC1,CC2 :	Contactor Resistencia Cámara	Contacteur Élément Chauffant Chambre	Chamber Heating Element Contactor	Schütz Heizwiderstand Garraum	Contattore Resistenza Camera
CMD :	Contactor Motor Derecha	Contacteur Moteur Droite	Right Engine Contactor	Schütz Motor rechts	Contattore Motore Destra
CMI :	Contactor Motor Izquierda	Contacteur Moteur Gauche	Left Engine Contactor	Schütz Motor links	Contattore Motore Sinistra
CR :	Rele Arranque	Relais Démarrage	Starting Relay	Relais Anlauf	Relè Accensione
CV1,CV2 :	Contactor Resistencias Caldera	Contacteur Élément Chauffant Chaudière	Boiler Heating Element Contactor	Schütz Heizwiderstand Boiler	Contattore Resistenza Caldaia
DEC :	Detector Llama Cámara	Détecteur Flamme Chambre	Chamber Flame Detector	Flammendetektor Garraum	Rilevatore di Fiamma Camera
DEV :	Detector Llama Caldera	Détecteur Flamme Chaudière	Boiler Flame Detector	Flammendetektor Boiler	Rilevatore di Fiamma Caldaia
DN :	Detector Nivel Caldera	Détecteur Niveau Chaudière	Boiler Level Detector	Pegeldetektor Boiler	Rilevatore Livello Caldaia
EM :	Encoder Selector Tiempo	Encodeur Sélecteur Temps	Time Selector Encoder	Encoder Zeitwahlschalter	Encoder Selettore Tempo
E°C :	Encoder Selector Temperatura	Encodeur Sélecteur Température	Temperature Selector Encoder	Encoder Temperaturwahlschalter	Encoder Selettore Temperatura
F :	Fusibles	Fusibles	Fuses	Sicherungen	Fusibili
FI :	Filtro Interferencias	Filtre Interférences	Interference Filter	Störungsfilter	Filtro Interferenze
FM :	Térmico Motor	Thermique Moteur	Thermal Engine	Thermoschalter Motor	Termico Motore
GV1,GV2 :	Electro válvula Gas Cámara	Électrovanne Gaz Chambre	Chamber Gas Solenoid Valve	Elektroventil Gas Garraum	Elettrovalvola Gas Camera
GV3,GV4 :	Electro válvula Gas Caldera	Électrovanne Gaz Chaudière	Boiler Gas Solenoid Valve	Elektroventil Gas Boiler	Elettrovalvola Gas Caldaia
IC :	Selector Velocidad Potencia	Sélecteur Vitesse Puissance	Power Speed Selector	Wahlschalter Geschwindigkeit Leistung	Selettore Velocità Potenza
IG :	Interruptor General	Interrupteur Général	Main Switch	Hauptschalter	Interruttore generale
IL :	Interruptor Seguridad Lavado	Interrupteur Sécurité Lavage	Washing Safety Switch	Sicherheitsschalter Waschen	Interruttore Sicurezza Lavaggio
Ip :	Interruptor Seguridad Puerta	Interrupteur Sécurité Porte	Door Safety Switch	Sicherheitsschalter Tür	Interruttore Sicurezza Porta
KI1,KI2,CK1,CK2 :	Rele Resistencia	Relais Élément Chauffant	Heating Element Relay	Relais Heizwiderstand	Relè Resistenza
Lz :	Luz Interior	Éclairage Interieur	Inner Light	Innenbeleuchtung	Luce Interna
M,M1,M2 :	Motor Turbina	Moteur Turbine	Turbine Engine	Motor Turbine	Motore Turbina
Mch :	Motor Chimenea	Moteur Cheminée	Stack Engine	Motor Abluftkamin	Motore Canna
Md :	Motor Válvula	Moteur vanne	Valve Engine	Motor Ventil	Motore Valvola
MBA :	Bomba Lavado	Pompe Lavage	Washing Pump	Waschenpumpe	Pompa lavaggio
Mb :	Interruptor Micro Bajada	Microrupteur Descente	Drop Microswitch	Mikroschalter Senken	Interruttore Micro Discesa
Ms :	Interruptor Micro Subida	Microrupteur Montée	Rise Microswitch	Mikroschalter Heben	Interruttore Micro Salita
PF :	Potenciómetro Selector Funciones	Potentiomètre Sélecteur Fonctions	Functions Selector Potentiometer	Potentiometer Funktionswahlschalter	Potenziometro Selettore Funzioni
PRG :	Programador	Programmateur	Programmer	Programmiervorrichtung	Programmatore
RC :	Resistencias Cámara	Eléments Chauffants Chambre	Chamber Heating Element	Heizwiderstände Garraum	Resistenze Camere
RV :	Resistencias Caldera	Eléments Chauffants Chaudière	Boiler Heating Element	Heizwiderstände Boiler	Resistenze Caldaia
Tc :	Sonda Cámara	Sonde Chambre	Chamber Probe	Sonde Garraum	Sonda Camera
TCN :	Termostato Condensación	Thermostat Condensation	Condensation Thermostat	Thermostat Kondensierung	Termostato Condensazione
Tg :	Sonda Caldera	Sonde Chaudière	Boiler Probe	Sonde Boiler	Sonda Caldaia
TH :	Sonda Humedad	Sonde Humidité	Humidity Probe	Sonde Feuchtigkeit	Sonda Umidità
Tn :	Sonda Núcleo	Sonde Noyau	Core Probe	Kerntemperaturmessonde	Sonda Nucleo
TRF :	Transformador	Transformateur	Transformer	Transformator	Trasformatore
TSC :	Termostato Seguridad Cámara	Thermostat Sécurité Chambre	Chamber Safety Thermostat	Sicherheitsthermostat Garraum	Termostato Sicurezza Camera
TSV :	Termostato Seguridad Caldera	Thermostat Sécurité Chaudière	Boiler Safety Thermostat	Sicherheitsthermostat Boiler	Termostato Sicurezza Caldaia
Tv :	Sonda Vapor	Sonde Vapeur	Steam Probe	Sonde Dampf	Sonda Vapore
VAC :	Bomba Vaciado	Pompe Vidange	Vacuum Pump	Ablasspumpe	Pompa scarico
VAcl :	Electro válvula Aclarado	Électrovanne Rinçage	Rinsing Solenoid Valve	Elektroventil Klarspülen	Elettrovalvola Risciacquo
VC :	Ventilador Soplante	Ventilateur Soufflant	Blowing Fan	Ventilator Gebläse	Ventilatore Soffiante
VCN :	Electro válvula Condensación	Électrovanne Condensation	Condensation Solenoid Valve	Elektroventil Kondensierung	Elettrovalvola Condensazione
VDV :	Electro válvula Llenado Caldera	Électrovanne Remplissage Chaudière	Chamber Filling Solenoid Valve	Elektroventil Füllung Boiler	Elettrovalvola di Riempimento Caldaia
VE :	Ventilador Cuadro Eléctrico	Ventilateur Tableau Electrique	Fan Switchboard	Ventilator Elektrotafel	Ventilatore Quadro Elettrico
VHM :	Electro válvula Humidificador	Électrovanne Humidificateur	Humidifier Solenoid Valve	Elektroventil Befeuchtungsvorrichtung	Elettrovalvola Umidificatore
VLav :	Electro válvula Lavado	Electrovanne Lavage	Washing Solenoid Valve	Elektroventil Waschen	Elettrovalvola Lavaggio
Vv :	Variador Velocidad	Variateur Vitesse	Speed Variator	Geschwindigkeitsregler	Variatore di Velocità
COLOR	COLORES	COULEURS	COLOUR	FARBEN	COLORE
Va :	Azul	Bleu	Blue	Blau	Blu
am :	Amarillo	Jaune	Yellow	Gelb	Giallo
am/ve :	Amarillo/verde	Jaune /vert	Yellow /green	Gelb/grün	Giallo/verde
b :	Blanco	Blanc	White	Weiß	Bianco
g :	Gris	Gris	Grey	Grau	Grigio
m :	Marrón	Marron	Brown	Braun	Marrone
n :	Negro	Noir	Black	Schwarz	Nero
na :	Naranja	Orange	Orange	Orange	Arancio
r :	Rojo	Rouge	Red	Rot	Rosso
rs :	Rosa	Rose	Pink	Rosa	Roseo
ve :	Verde	Vert	Green	Grün	Verde
vi :	Violeta	Violet	Purple	Violett	Viola

Leyenda Hornos HC-76970-1 T303042000