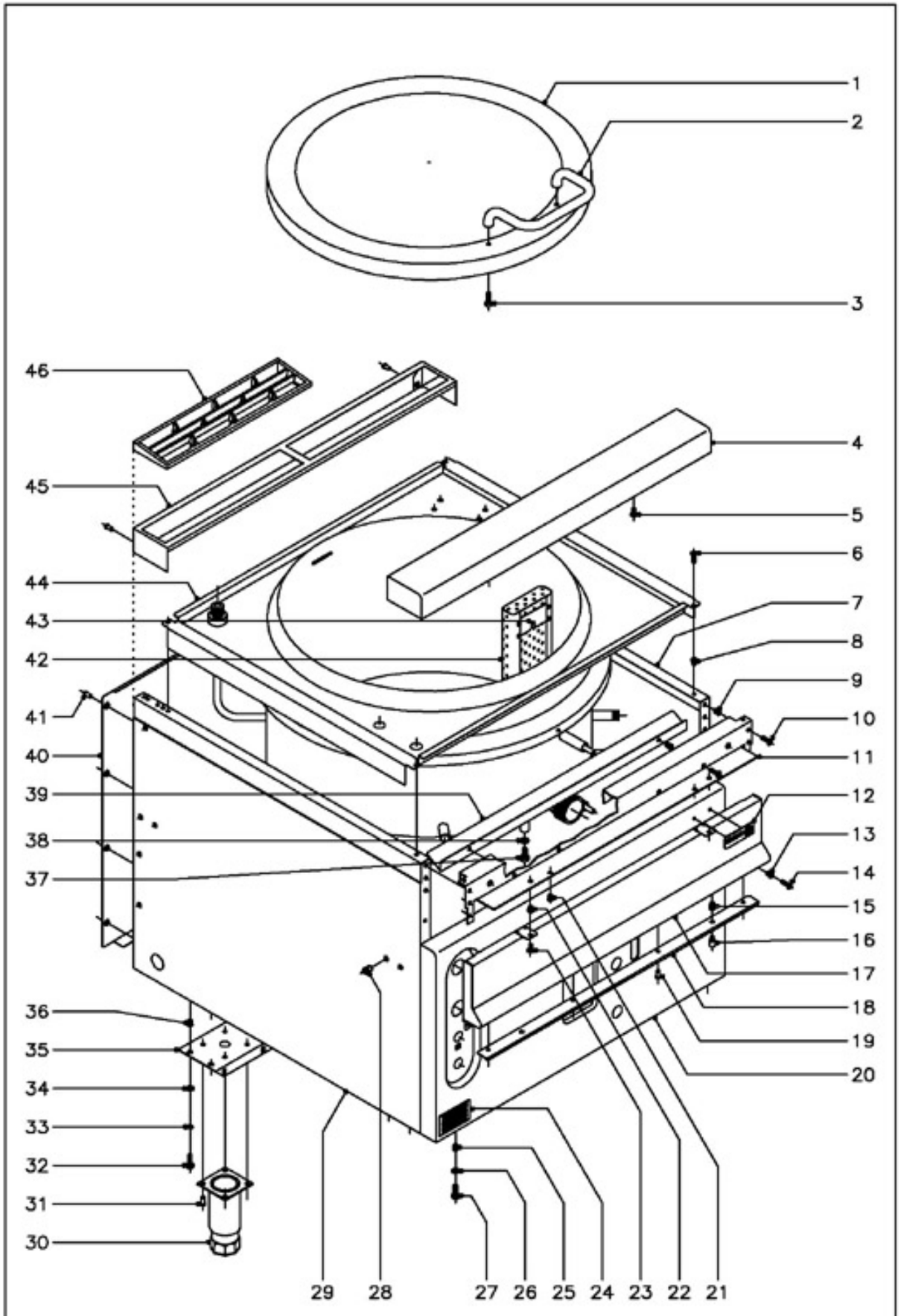

1	S036141
2	S036123
3	Q012053
4	R165431
5	Q152004
6	Q152004
7	X162811
7	X192805
7	S372812
8	Q221342
9	Q221342
10	Q152004
11	R162613
12	U262806
	Q221023
13	Q221342
14	Q152004
15	Q221343
16	Q151336
17	S032806
18	S032807
19	Q419005
20	S022801
20	S042805
20	S072805
21	Q221342
22	Q221342
23	Q152004
24	S326540
25	Q221343
26	Q302022
27	Q012042
28	Q221343
29	X162810
29	X192803
29	S372810
30	X260150
31	Q411304
32	Q012042
33	Q162040
34	Q302022
35	S032631
36	Q221343
37	Q012063
38	Q304003
39	S032645

	Q221342
	Q152004
40	U562853
40	X242817
40	S372816
41	Q419005
42	S016145
42	S036145
43	S036117
	Q412000
44	S026150
44	S046150
45	R205428
	Q419005
46	R205425

N plano	Firma	Fecha	Aparato	Lamina
C-1059		6-2001	MUEBLE MARMITAS MG9-10BM, MG9-15BM	1

Fagor Industrial S.Coop. FAGOR
Oñate

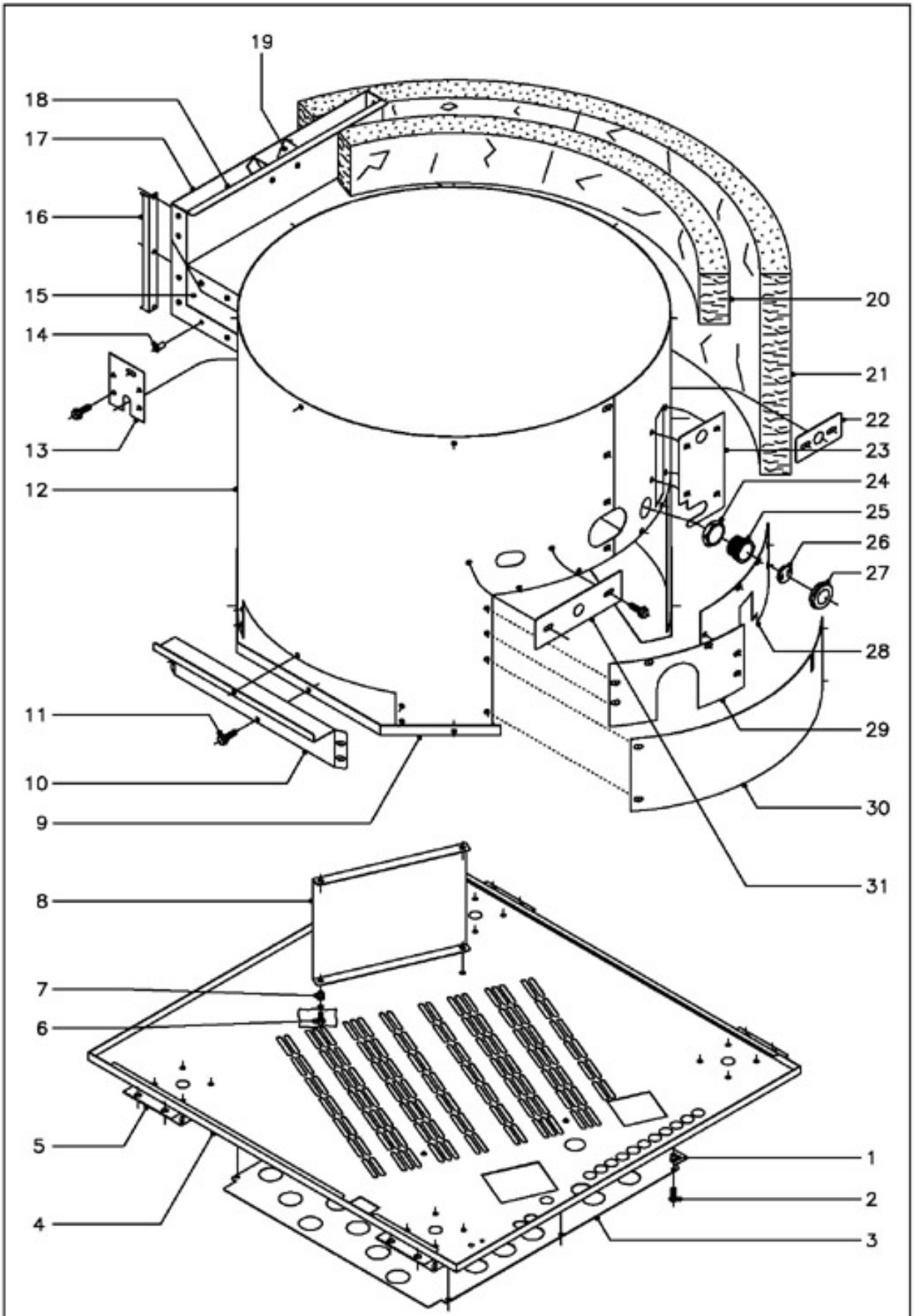

1	Q221342
2	Q152004
3	S272610
4	S272606
4	S062811
4	S372814
5	S032631
6	Q012031
7	Q221342
8	S022616
8	S072605
9	S042625
10	S272609
10	S072607
11	Q151323
12	S022615
12	S042627
12	S072606
13	S042615
14	Q419005
15	S042631
16	X162657
17	S042628
18	S042629
19	S035400
20	S116403
21	R092622
22	S042640
23	S022619
23	S042632
24	Q223014
25	9294500
26	9294600
27	9294400
28	S022617
28	S272607
29	S272608
30	S022618
31	S042644

N plano	Firma	Fecha	Aparato	Lamina	
C-1060		6-2001	PIEZAS INTERIORES MARMITAS MG9-10BM, MG9-15BM	2	Fagor Industrial S.Coop. FAGOR Oñate

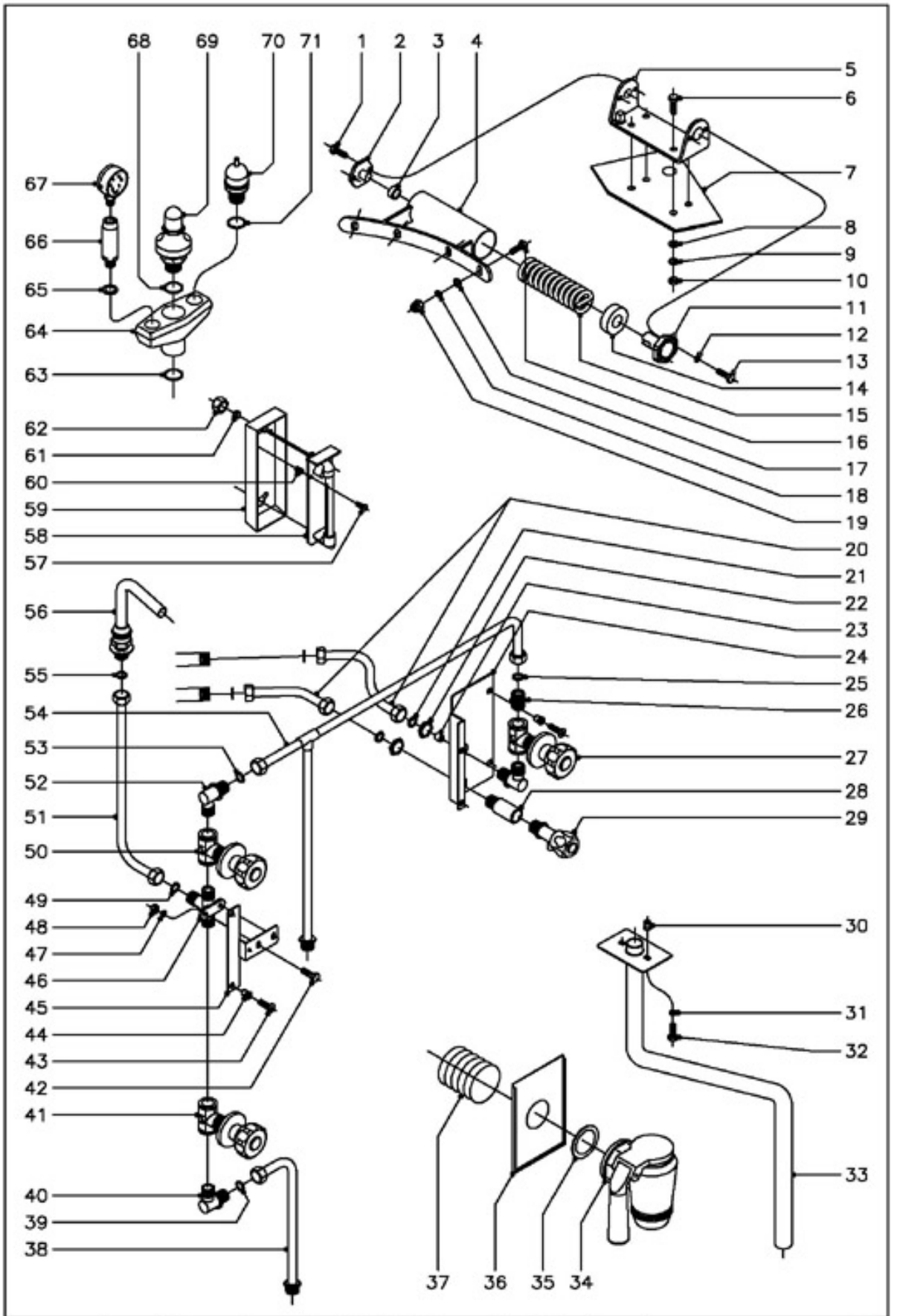

N. plano C-1061	Firma	Fecha 6-2001	Aparato TOMAS,DESAGUES,BISAGRA,VALVULAS,VISUALIZADOR MARMITAS MG9-10BM, MG9-15BM	Lamina 3	Fagor Industrial S.Coop. Oñate	FAGOR	

1	Q012041
2	S116119
3	S116126
4	S036143
4	S036146
5	S036131
6	Q012055
7	S026102
8	Q232050
9	Q262050
10	Q162050
11	S116120
12	Q262040
13	Q012042
14	S116118
15	S116121
16	Q012053
17	Q232050
18	Q262050
19	Q212051
20	S025006
20	S045004
21	Q306024
22	Q221302
23	S225012
24	S092601
	Q221342
	Q152004
25	Q306024
26	S205023
27	S112154
28	S045006
29	S022104
30	Q221342
31	Q262030
32	Q012032
33	S036119
33	S065004
34	S112150
35	S112152
36	S112803
37	S112105
38	S035036
38	S065020
38	S375007
39	Q306024
40	S115013
41	S112151
42	Q012042
43	Q152004

44	Q221342
45	S032640
46	S205022
47	Q262040
48	Q162040
49	Q306024
50	S112154
51	S035032
52	S115013
53	Q306024
54	S045015
54	S075010
54	S375005
55	Q306024
56	S052100
57	Q012021
58	S082100
59	S292600
60	Q221341
61	U265008
62	S082101
63	Q306049
64	S022100
65	Q306039
66	S022102
67	9220815
68	Q306049
69	S022101
70	S022103
71	Q306049

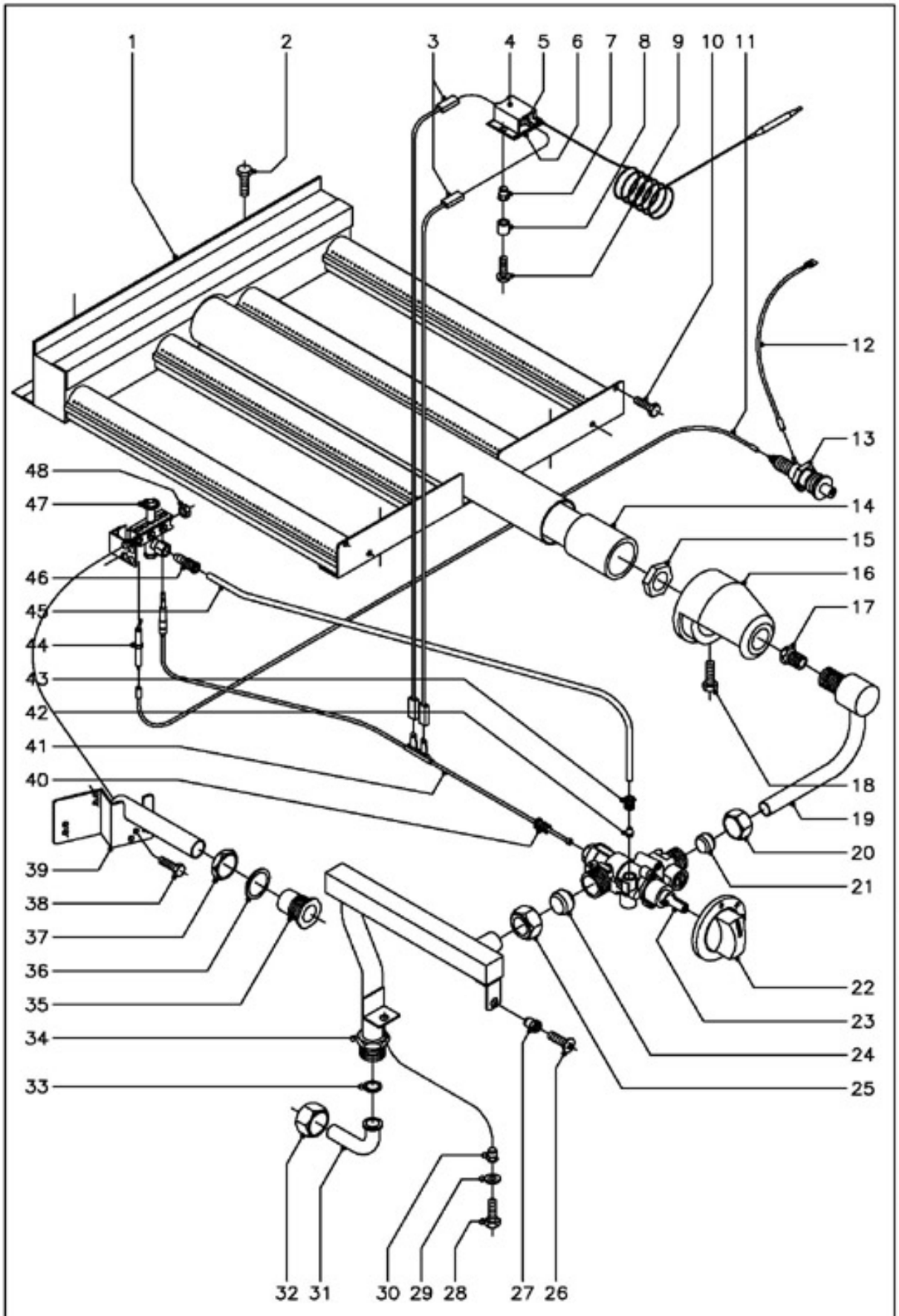

Nº plano C-1062	Firma	Fecha 6-2001	Aparato MARMITAS	PARTE FUNCIONAL GAS MG9-10BM, MG9-15BM	Lamina 4	Fagor Industriel S.Coop. Oñate	FAGOR

1	S275705
2	Q012031
3	S223002
4	X353007
5	X033001
6	X353015
7	Q221341
8	U813000
9	Q151320
10	Q012031
11	U323030
12	U333003
13	S113034
14	S135733
15	Q221302
16	0628100
17	S012400
17	S032400
17	S012401
17	S114401
17	S012402
17	S032401
18	Q012043
19	S025010
19	S045025
20	S312105
21	S312106
22	S312110
23	S312101

24	S312104
25	S312103
26	Q152004
27	Q221342
28	Q012042
29	Q302022
30	Q221343
31	U565007
32	U725006
33	Q306052
34	S035030
34	S065016
34	S375002
35	S112804
36	Q306027
37	Q221324
38	Q012031
39	S045028
40	U264301
41	X022130
42	X205028
43	S312107
44	X012101
45	S015012
45	S045027
46	U134323
47	R202100
	U442138
	U442137
48	Q162030

		BUTANO - PROPANO
17	S012400	Tobera Ø2,20
17	S032400	Tobera Ø2,45
47	U442138	Inyector piloto Ø 0,25
s/n	U136501	Indicador (Butano - Propano)
		GAS NATURAL
17	S012401	Tobera Ø3,10
17	S114401	Tobera Ø3,65
47	U442137	Inyector piloto Ø 0,40
s/n	U134402	Indicador (Gas Natural)
		GAS VILLA
17	S012402	Tobera Ø5,90
17	S032401	Tobera Ø6,90
47	U442138	Inyector piloto Ø 0,25
s/n	U134310	Indicador (Gas Villa)