ROLLER 30÷40 PVC

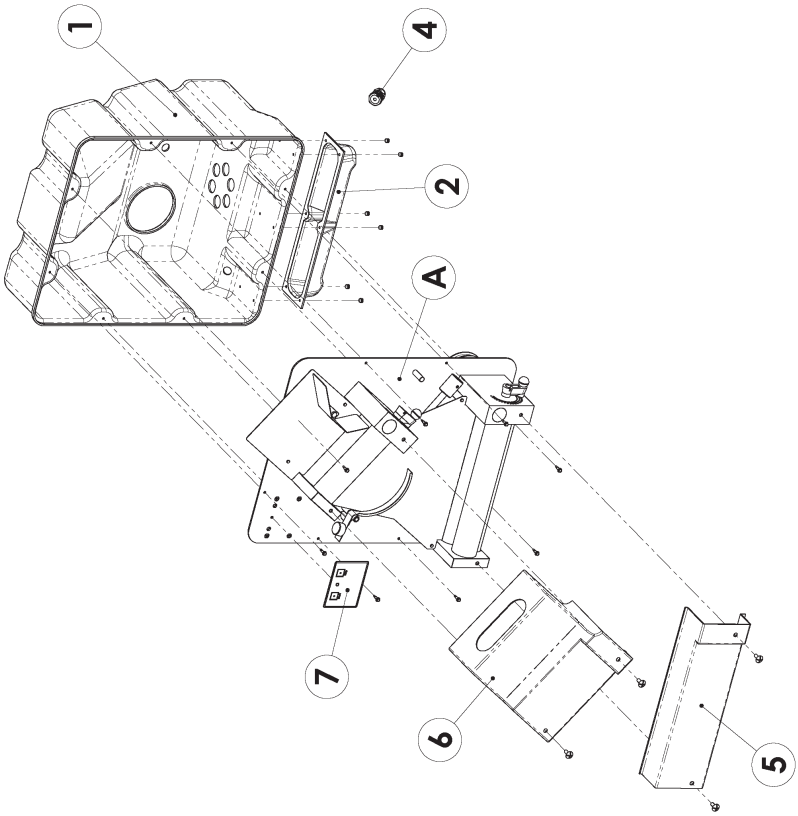

Part. A

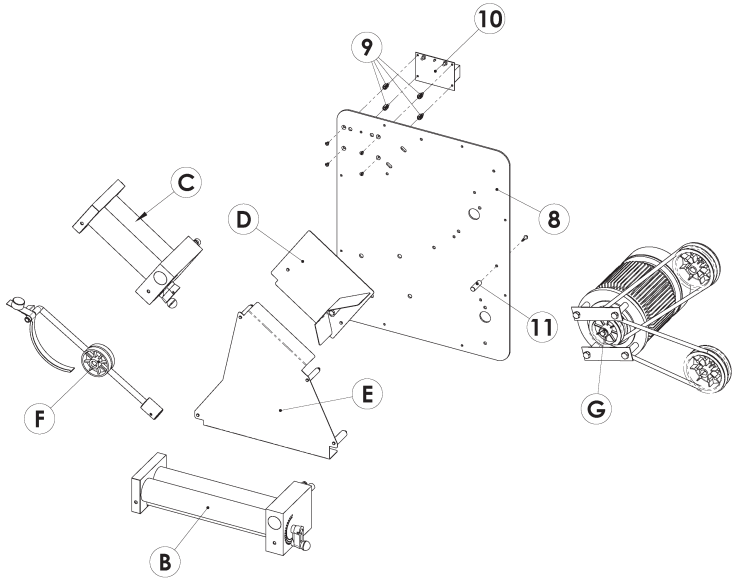
10
9
C
D
8
11
F
E
G
B

Part. B

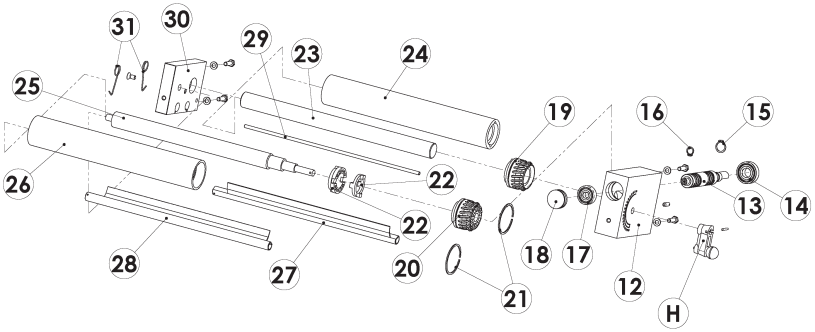
31
30
29
23
24
25
19
16
15
26
22
13
14
22
18
17
28
27
20
21
12
H

Part. C

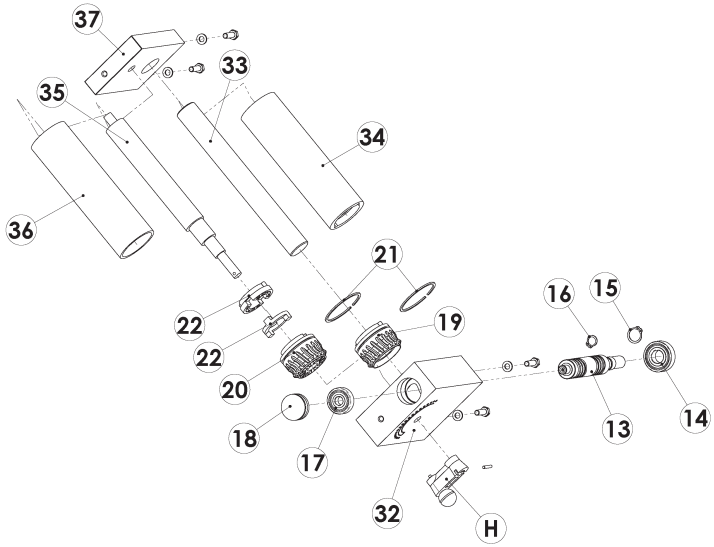

Part. D

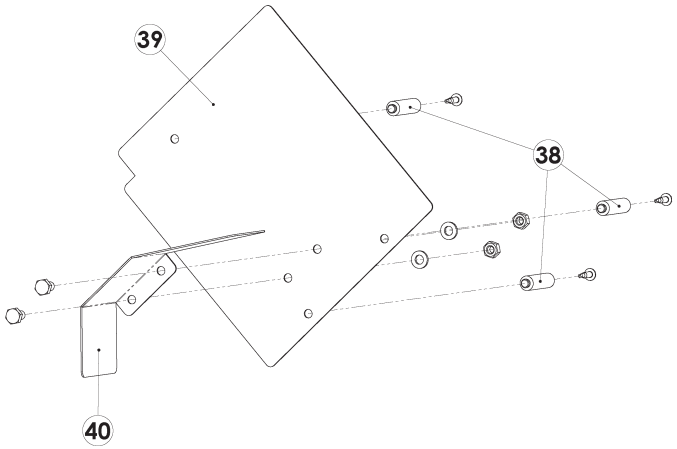

Part. E

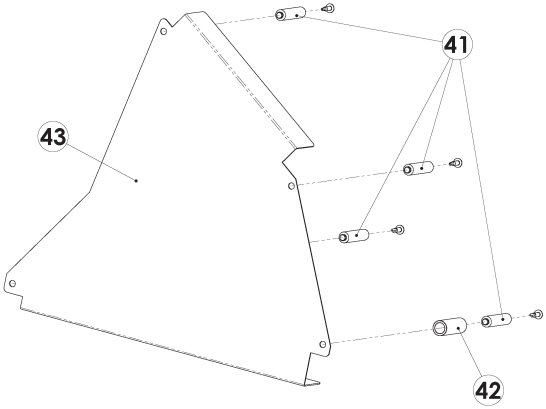

Part. F

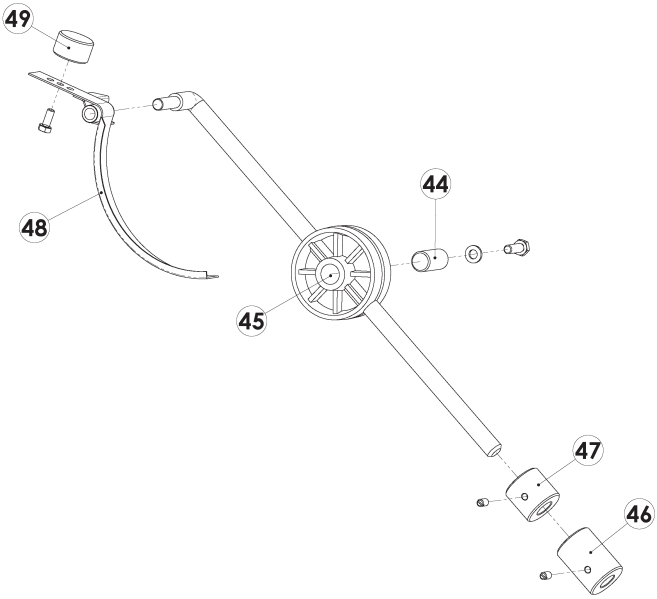

Part. G

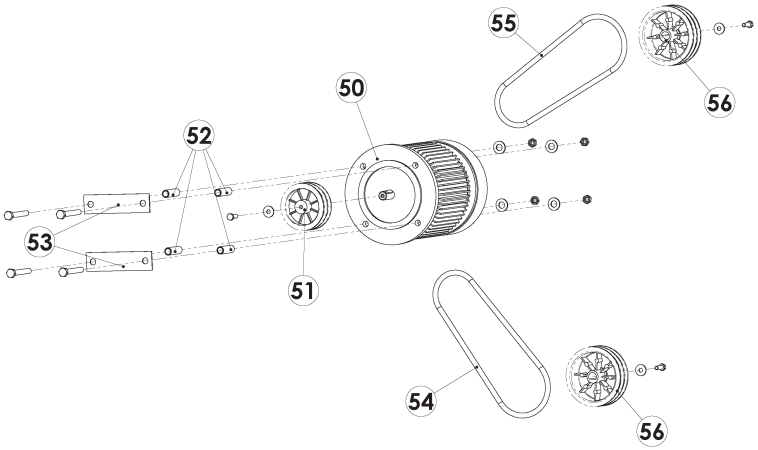

Part. H

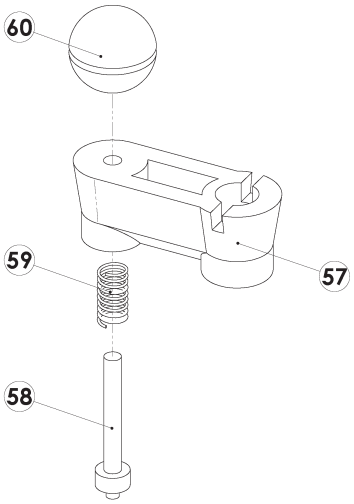

Part. I

ROLLER 30÷40÷45 INOX

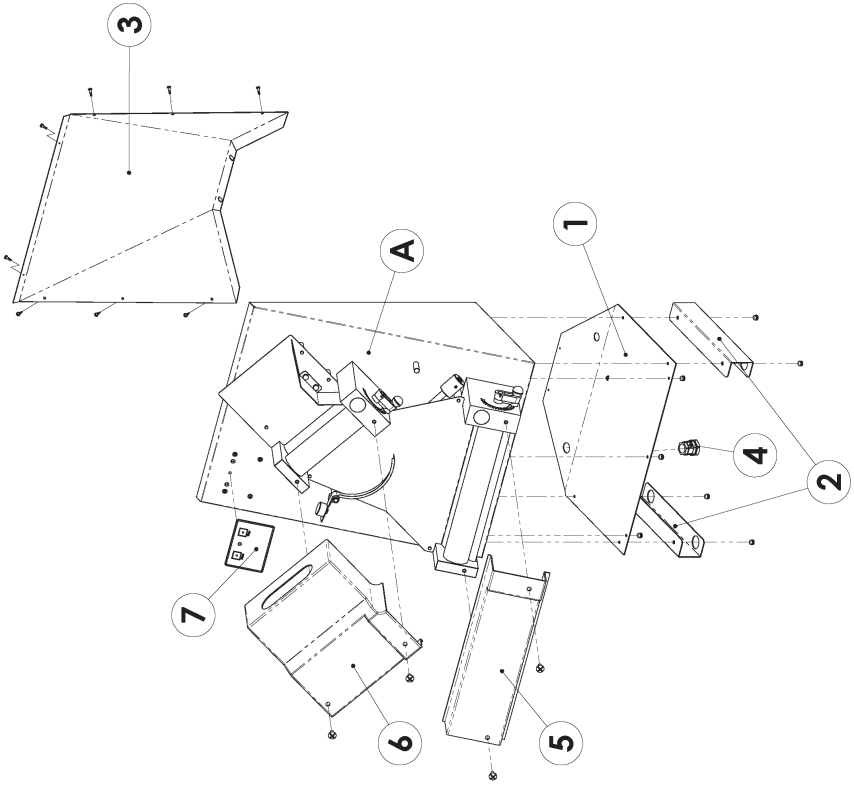

Part. A

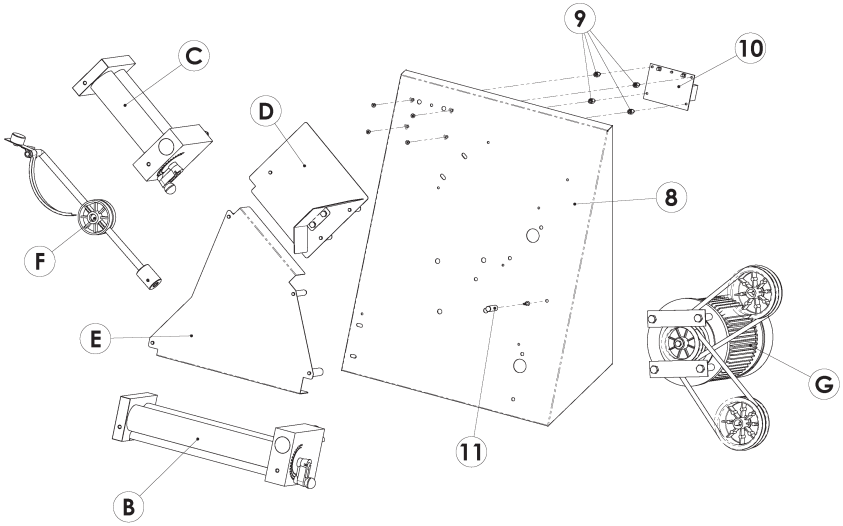
C
D
9
10
8
F
E
G
11
B

Part. B

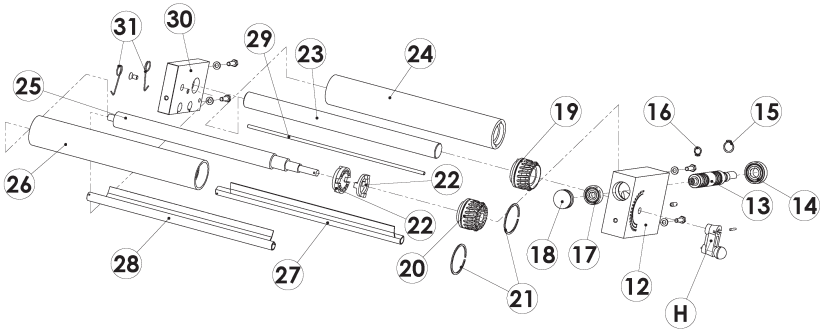
31
30
29
23
24
25
19
16
15
26
22
22
13
14
28
27
20
18
17
12
21
H

Part. C

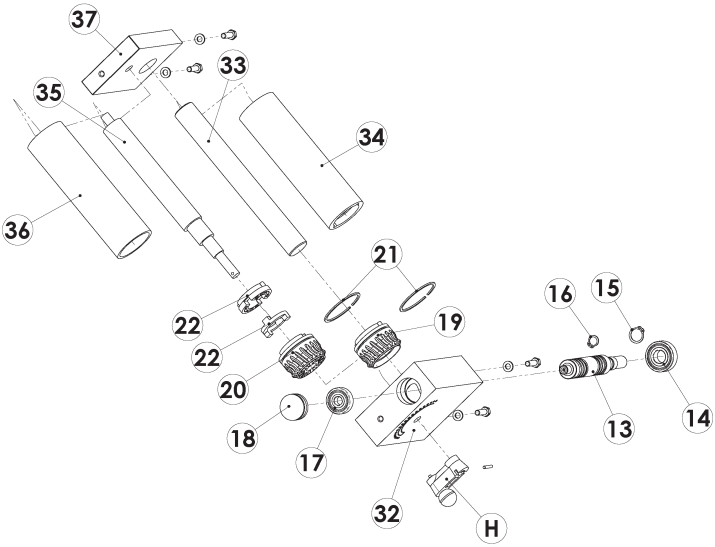

Part. D

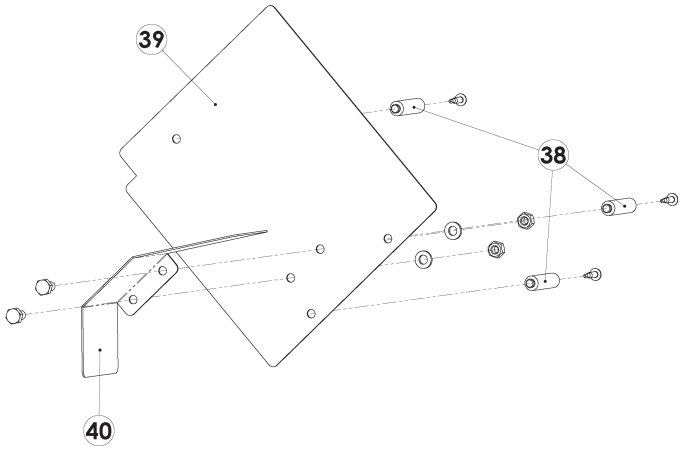

Part. E

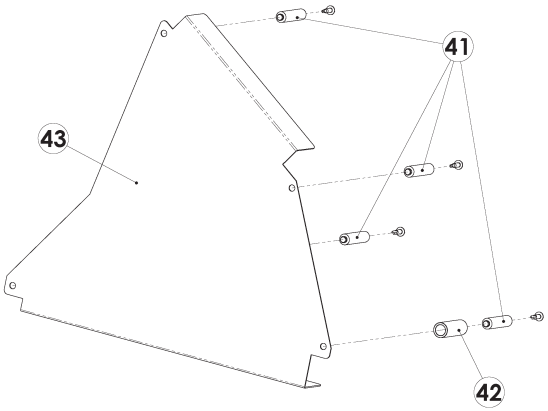

Part. F

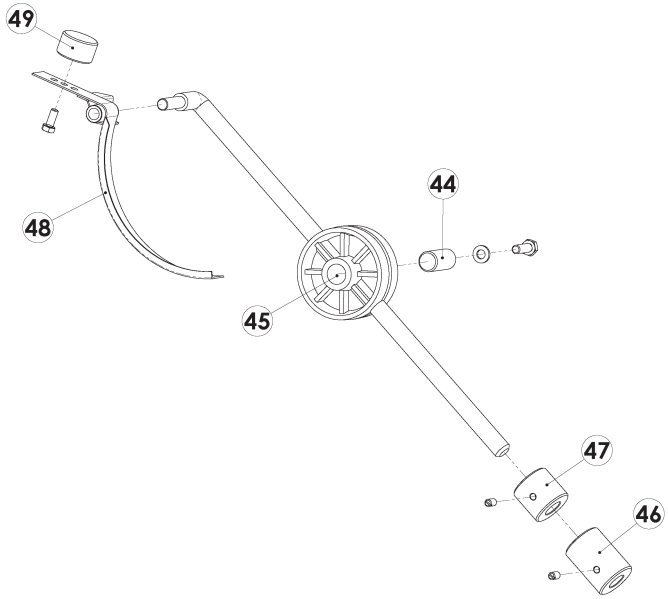

Part. G

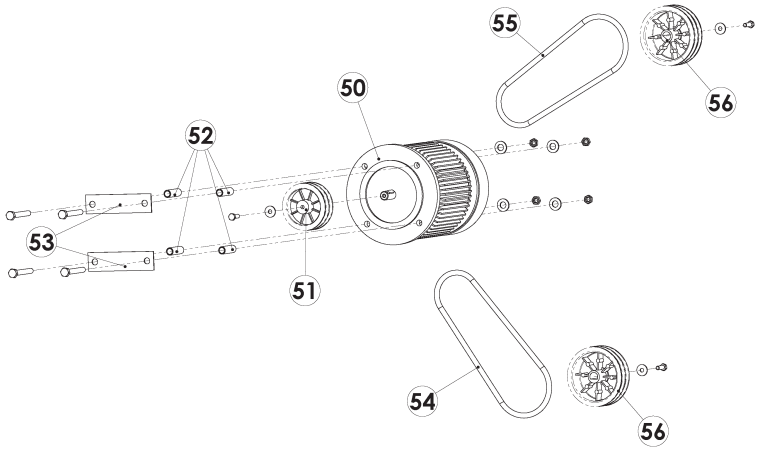

Part. H

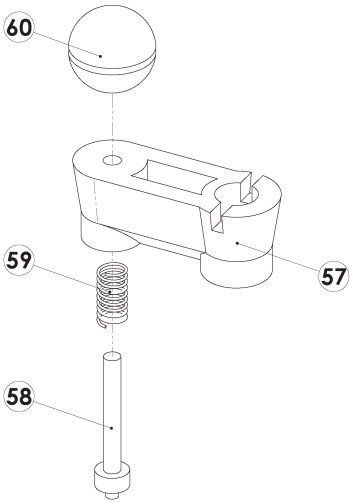

Part. I

MODELLO	30PVC	30INOX	40PVC	40INOX	45INOX
POSIZIONE N°	CODICE	CODICE	CODICE	CODICE	CODICE
1	4100020	4104090	4100050	4104110	RM00080
2	4100200	4100240	4100320	4100210	4100130
3		4104200		4104230	RM0070
4	5581000	5581000	5581000	5581000	5581000
5	4100070	4100070	4100450	4100450	4100480
6	4100060	4100060	4100400	4100400	4100400
7	5800370	5800370	5800370	5800370	5800370
8	4050030	4100040	4050050	4100090	4100630
9	5320750	5320750	5320750	5320750	5320750
10	5310000	5310000	5310000	5310000	5310000
11	3002170	3002170	3002170	3002170	3002170
12	3004200	3004200	3004200	3004200	3004200
13	3003650	3003650	3003650	3003650	3003650
14	5093100	5093100	5093100	5093100	5093100
15	5203200	5203200	5203200	5203200	5203200
16	5203100	5203100	5203100	5203100	5203100
17	5093000	5093000	5093000	5093000	5093000
18	4203100	4203100	4203100	4203100	4203100
19	3203510	3203510	3203510	3203510	3203510
20	3203410	3203410	3203410	3203410	3203410
21	5003010	5003010	5003010	5003010	5003010
22	4203250	4203250	4203250	4203250	4203250
23	3004100	3004100	3003350	3003350	3004120
24	3003900	3003900	3003950	3003950	3003930
25	3004000	3004000	3004050	3004050	3004110
26	3003800	3003800	3003850	3003850	3003920
27	4001010	4001010	4001030	4001030	4100050
28	4001020	4001020	4001040	4001040	4100060
29	3100400	3100400	3100500	3100500	3100600
30	3004300	3004300	3004300	3004300	3004300
31	4000500	4000500	4000500	4000500	4000500
32	3003400	3003400	3003400	3003400	3003400
33	3003300	3003300	3004150	3004150	3004150
34	3003100	3003100	3003150	3003150	3003150
35	3003200	3003200	3003250	3003250	3003250
36	3003000	3003000	3003050	3003050	3003050
37	3003410	3003410	3003410	3003410	3003410
38	3002460	3002460	3002460	3002460	3002460
39	4050120	4050120	4050150	4050150	4050150
40	4050300	4050300	4050300	4050300	4050300
41	3002470	3002470	3002470	3002470	3002470
42	3002700	3002700	3002700	3002700	3002700
43	4050220	4050220	4050250	4050250	4050110
44	3002000	3002000	3002000	3002000	3002000
45	3503400	3503400	3504400	3504400	RM05030
46	3004700	3004700	3004720	3004720	RM00220
47			3004770	3004770	
48	3004500	3004500	3004550	3004550	3004550
49	3004600	3004600	3004650	3004650	3004650
50	5420200	5420200	5420300	5420300	5420300
51	3150080	3150080	3150080	3150080	3150080
52	3002400	3002400	3002400	3002400	3002400
53	3050810	3050810	3050810	3050810	3050810
54	5070050	5070200	5070050	5070010	5070010
55	5070010	5070200	5070180	5070010	5070010
56	3150030	3150030	3150030	3150030	3150030
57	4203000	4203000	4203000	4203000	4203000
58	3003700	3003700	3003700	3003700	3003700
59	5163010	5163010	5163010	5163010	5163010
60	5873100	5873100	5873100	5873100	5873100
OPTIONAL	2300020	Pedale PML con cavo 2x0,75			