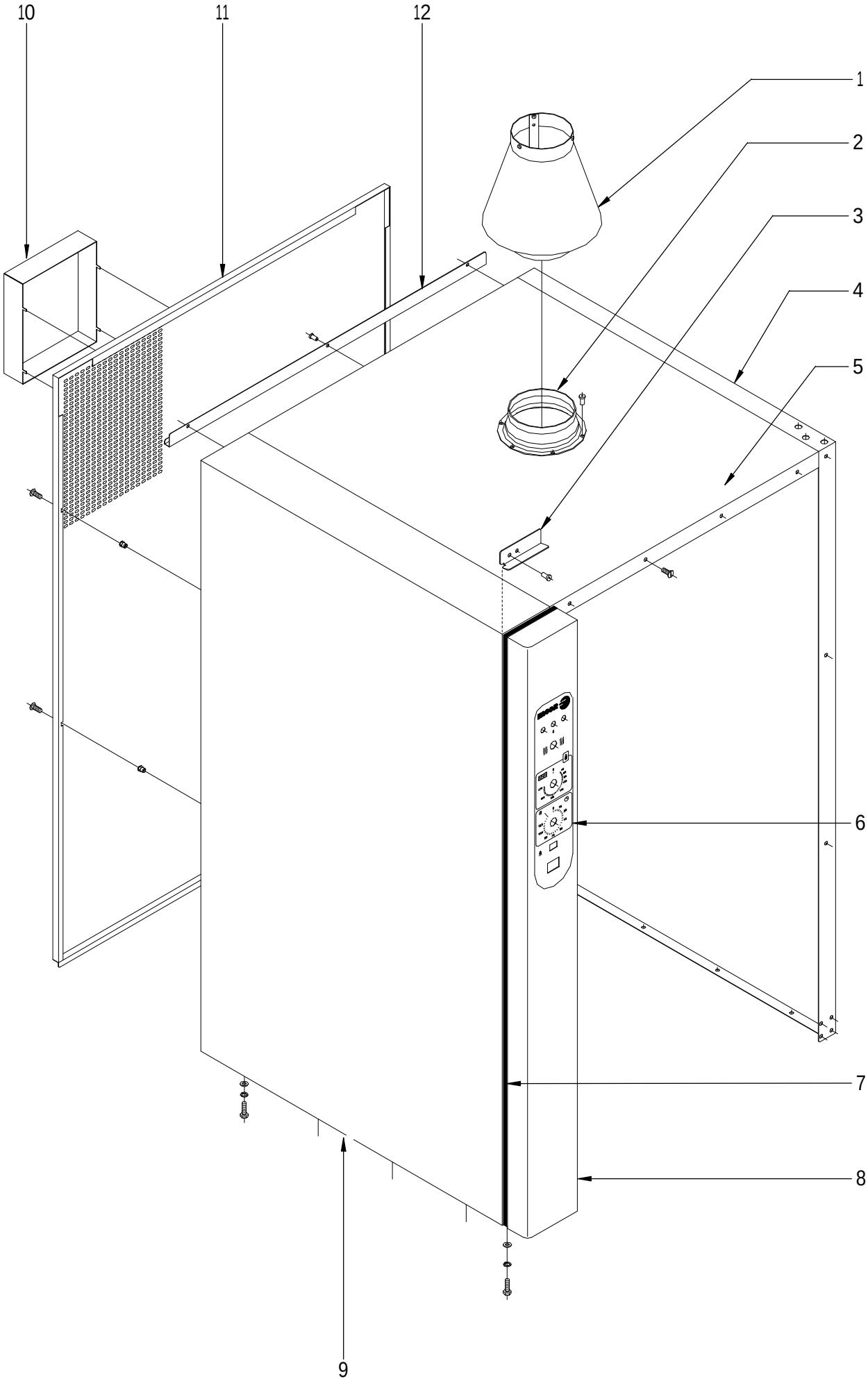

N plano	Firma	Fecha	Aparato	MUEBLE	Lamina	
C-1982		2008-02	HORNO HGC-6/11;10/11; 20/11		1	Fagor Industrial S.Coop. FAGOR Oñate

MOD.	HORNOS	ZONA	MUEBLE	PLANO	C-1982

ITEM	CODIGO	DENOMINACION	TEXTO	HGC-6/11	HGC-10/11	HGC-20/11					NOTAS
1	R272612000	CHIMENEA	FLUE PIPE	1	1	1					
	R292646000	CONDUCTO HUMOS	SMOKE CONDUCT	1	1	1					
	R272614000	SOPORTE CHIMENEA HCG/HGC	FLUEPIPE SUPPORT HCG/HGC	3	3	3					
	Q412002000	REMACHE AVINOX Ø4x10MM	RIVET AVINOX Ø4x10MM	6	6	12					
2	R292645000	GUIA CHIMENEA	FLUEPIPE GUIDE	1	1	1					
	Q412002000	REMACHE AVINOX Ø4x10MM	RIVET AVINOX Ø4x10MM	6	6	6					
3	R662811000	FIJACION PORTAMANDOS	CONTROL HOLDER ATTACHM.	_	1	1					
	Q412002000	REMACHE AVINOX Ø4x10MM	RIVET AVINOX Ø4x10MM	_	2	2					
4.5.9	T082805000	CUERPO EXTERIOR HCG-6/11	EXTERIOR BODY HCG-6/11	1	_	_					
4.5.9	T012806000	CUERPO EXTERIOR HCG-10/11	EXTERIOR BODY HCG-10/11	_	1	_					
4	T102804000	PANEL LATERAL DCHO HCG-20-11	SIDE PANEL RIGHT HCG-20-11	_	_	1					
	Q152017000	TORNILLO AMARRE M6X13 A304	FASTENING BOLT M6X13 A304	4	5	_					
	Q221343000	REMACHE EXAGONAL M6	HEXAGONAL RIVET M6	4	4	4					
	Q232040000	ARANDELA A6	WASHER A6	4	4	4					
	Q262040000	ARANDELA GROW. A6 A.304	WASHER GROW. A6 A.304	4	4	4					
	Q012042000	TORNILLO EXAGONAL M6x15	HEXAGONAL BOLT M6x15	4	4	4					
5	T102805000	PANEL SUPERIOR HCG-20-11	UPPER PANEL HCG-20-11	_	_	1					
	Q221343000	REMACHE EXAGONAL M6	HEXAGONAL RIVET M6	_	_	4					
	Q232040000	ARANDELA A6	WASHER A6	_	_	4					
	Q262040000	ARANDELA GROW. A6 A.304	WASHER GROW. A6 A.304	_	_	4					
	Q012042000	TORNILLO EXAGONAL M6x15	HEXAGONAL BOLT M6x15	_	_	4					
	Q152017000	TORNILLO AMARRE M6X13 A304	FASTENING BOLT M6X13 A304	_	_	6					
6	T013047000	SERIGRAFIA HGC-611 10/11 20/11	SERIGRAPHY HGC-611 10/11 20/	1	1	1					
7	3715400000	JUNTA PANEL PORTAMANDOS	SEAL CONTROL HOLDER PANEL	3	3	3					

MOD.	HORNOS	ZONA	MUEBLE	PLANO	C-1982

ITEM	CODIGO	DENOMINACION	TEXTO	HGC-6/11	HGC-10/11	HGC-20/11					NOTAS
8	T082811000	PORTAMANDOS COMP. HGC-6/11	CONTROL HOLDER HGC-6 / 11	1	_	_					
8	T012810000	PORTAMANDOS COMP. HGC-10/11	CONTROL HOLDER HGC-10 / 11	_	1	_					
8	T102817000	PORTAMANDOS COMP. HGC-20/11	CONTROL HOLDER HGC-20 / 11	_	_	1					
	Q221343000	REMACHE EXAGONAL M6	HEXAGONAL RIVET M6	2	2	2					
	Q221342000	REMACHE EXAGONAL M5	HEXAGONAL RIVET M5	4	4	4					
	Q232040000	ARANDELA A6	WASHER A6	2	2	2					
	Q012042000	TORNILLO EXAGONAL M6x15	HEXAGONAL BOLT M6x15	2	2	2					
	Q262040000	ARAND.GROW. A6 A.304	WASHER GROW. A6 A.304	2	2	2					
	Q152004000	TORNIL. APLASTADO M5X13 A 304	FLAT HEADED SCREW M5x13 A 3	4	4	4					
9	T102818000	PANEL LATERAL IZDO HGC2011	SIDE PANEL LEFT HGC2011	_	_	1					
	Q221343000	REMACHE EXAGONAL M6	HEXAGONAL RIVET M6	_	_	4					
	Q232040000	ARANDELA A6	WASHER A6	_	_	4					
	Q262040000	ARANDELA GROW. A6 A.304	WASHER GROW. A6 A.304	_	_	4					
	Q012042000	TORNILLO EXAGONAL M6x15	HEXAGONAL BOLT M6x15	_	_	4					
10	T082808000	TAPA DE SEPARACION	DIVIDING COVER	1	1	1					
11	T072903000	PANEL POSTERIOR HCG-6/11	REAR PANEL HCG-6/11	1	_	_					
11	R722909000	PANEL POSTERIOR HCG-10/11	REAR PANEL HCG-10/11	_	1	_					
11	T102819000	PANEL POSTERIOR HGC-20/11	REAR PANEL HGC-20/11	_	_	1					
	Q221342000	REMACHE EXAGONAL M5	HEXAGONAL RIVET M5	4	4	4					
	Q152038000	TORNILLO AMARRE M5x30	FASTENING BOLT M5X30	4	4	4					
	Q221343000	REMACHE EXAGONAL M6	HEXAGONAL RIVET M6	4	4	4					
	Q152017000	TORNILLO AMARRE M6X13 A304	FASTENING BOLT M6X13 A304	4	4	4					
12	R672811000	CANALETA RECOGEAGUAS	WATER COLLECTOR PIPE	1	1	1					
	Q412002000	REMACHE AVINOX Ø4x10MM	RIVET AVINOX Ø4x10MM	3	4	4					

N.plano
C-1983

Firma

Fecha
2008-02

Aparato
HORNO HGC-6/11; 10/11

PUERTA

Lamina
2

Fagor Industrial S.Coop.
Onate

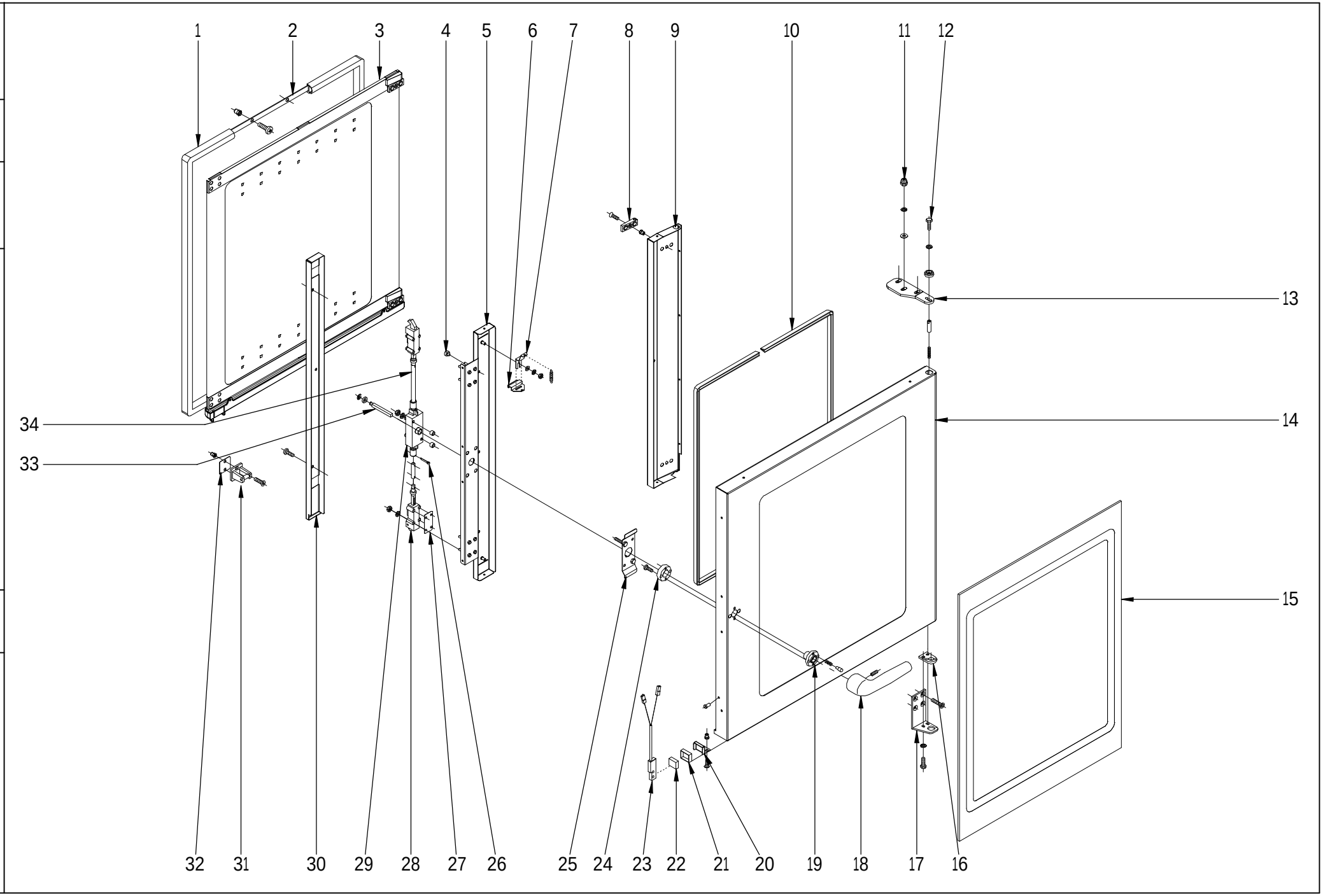

MOD.	HORNOS	ZONA	PUERTA	PLANO	C-1983

ITEM	CODIGO	DENOMINACION	TEXTO	HGC-6/11	HGC-10/11						NOTAS
	1100003129	**KIT PUERTA 6/11 COMPLETA**	**DOOR KIT 6/11 COMPLETE**	**1**	_						
	1100003131	**KIT PUERTA 10/11 COMPLETA**	**DOOR KIT 10/11 COMPLETE**	_	**1**						
1	R660503000	JUNTA DE PUERTA 6-11	DOOR SEAL 6-11	1	_						
1	R670500000	JUNTA DE PUERTA 10-11	DOOR SEAL 10-11	_	1						
2	R660526000	FIJACION JUNTA COMPLETA 6-11	COM. SEAL ATTACHMENT 6-11	1	_						
2	R670513000	FIJACION JUNTA COMPLETA 10-11	COM. SEAL ATTACHMENT 10-11	_	1						
	Q032021000	TORNILLO ALOMADO M4X10	CURVED SCREW M4X10	24	28						
	Q222041000	REMACHE EXAGONAL M4 (INOX)	HEXAGONAL RIVET M4 (INOX)	24	28						
3	**1100003130**	**KIT CRISTAL INTERIOR 6/11**	**INTER. GLASS KIT 6/11 COMP.**	**1**	_						
3	**1100003132**	**KIT CRISTAL INTERIOR 10/11**	**INTER. GLASS KIT 10/11 COMP.**	_	**1**						
4	R670617000	TOPE CRISTAL INTERIOR 10/11	INTERIOR GLASS BUFFER 10/11	5	6						
5	R660616000	CONTRAPUERTA MANILLA 6/11	DOOR REVERSE HANDLE 6/11	1	_						
5	R670633000	CONTRAPUERTA MANILLA 10/11	DOOR REVERSE HANDLE 10/11	_	1						
6	R670613000	PESTILLO 10/11	LATCH 10/11	2	2						
7	R670612000	BASE DE PESTILLO	LATCH BASE	2	2						
	Q302022000	ARANDELA 16X6X1.2 A.304	WASHER 16X6X1.2 A.304	2	2						
	Q162040000	TUERCA EXAGONAL M6	HEXAGONAL NUT M6	2	2						
	Q242040000	ARANDELA ABANICO A6 A.304	FAN WASHER A6 A.304	2	2						
	R660605000	MUELLE TENSOR	TENSIONING SPRING	2	2						
8	R670615000	BASE DE BISAGRA	HINGE BASE	2	2						
	Q222011000	REMACHE EXAGONAL M.5	HEXAGONAL RIVET M.5	2	2						
	Q042032000	TORNILLO AVELLANADO M5X15	COUNTERSUNK BOLT M5x15	2	2						
9	R660614000	CONTRAPUERTA BISAGRA 6/11	DOOR REVERSE HINGE 6/11	1	_						
9	R670631000	CONTRAPUERTA BISAGRA 10/11	DOOR REVERSE HINGE 10/11	_	1						
10	3715200000	JUNTA CRISTAL	WINDOW SEAL	2	2						
11	Q212051000	TUERCA SOMBRERETE M8	COWL NUT M8	3	3						
	Q242050000	ARANDELA ABANICO A8 A.304	FAN WASHER A8 A.304	3	3						
	Q302025000	ARANDELA 8,4x20x1,5 A.304	WASHER 8.4x20x1.5 A.304	3	3						
12	Q012042000	TORNILLO EXAGONAL M6x15	HEXAGONAL BOLT M6x15	1	1						
	Q242040000	ARANDELA ABANICO A6 A.304	FAN WASHER A6 A.304	1	1						
	R662807000	ARANDELA AMARRE	ANCHORAGE WASHER	1	1						

MOD.	HORNOS	ZONA	PUERTA	PLANO	C-1983

ITEM	CODIGO	DENOMINACION	TEXTO	HGC-6/11	HGC-10/11						NOTAS
13	T130500000	BISAGRA SUPERIOR	UPPER HINGE	1	1						
	R660534000	EJE SUPERIOR	UPPER SHAFT	1	1						
	Z850519000	RESORTE 06329	SPRING 06329	1	1						
14	R660612000	PANEL PUERTA 6/11	DOOR PANEL 6/11	1	_						
14	R670629000	PANEL PUERTA 10-11	DOOR PANEL 10-11	_	1						
	Q412002000	REMACHE AVINOX Ø4x10MM	RIVET AVINOX Ø4x10MM	14	14						
15	R660610000	CRISTAL EXTERIOR 6/11	EXTERIOR GLASS 6/11	1	_						
15	R670627000	CRISTAL EXTERIOR 10/11	EXTERIOR GLASS 10/11	_	1						
16	R660549000	GUIA EJE INFERIOR FUNDIDO	LOWER SHAFT GUIDE CAST IR.	1	1						
	Q062040000	TORNILLO AVELLANADO M6X16	COUNTERSUNK BOLT M6x16	4	4						
17	R660551500	BISAGRA INFERIOR PLEGADA	LOWER FOLDER HINGE	1	1						
	Q242040000	ARANDELA ABANICO A6 A.304	FAN WASHER A6 A.304	2	2						
	Q012041000	TORNILLO EXAGONAL M6x10 A304	HEXAGONAL BOLT M6x10 A304	2	2						
18	T130502000	MANILLA COMPLETA	COMPLETE HANDLE	1	1						
	Q132042000	VARILLA ROSCADA M6X15	THREADED ROD M6X15	1	1						
	T130510000	TAPON Ø 16 BAGAL Ext.	COVER Ø 16 BAGAL Ext.	1	1						
19	T130515000	GUIA MANILLA	HANDLE GUIDE	1	1						
	T130507000	PITON ENGANCHE PUERTA	DOOR FASTENER SPIKE	2	2						
	T130506000	RESORTE 34548	SPRING 34548	2	2						
20	T130513000	SOPORTE IMAN	MAGNET BRACKET	1	1						
	Q222011000	REMACHE EXAGONAL M.5	HEXAGONAL RIVET M.5	1	1						
	Q032031000	TORNILLO ALOMADO M5X10	CURVED SCREW M5X10	1	1						
21	Z200507000	PROTECTOR IMAN	MAGNET PROTECTOR	1	1						
22	Z200506000	IMAN	MAGNET	1	1						
23	Z100522000	INTERRUPTOR MAGNETICO	MAGNETIC SWITCH	1	1						
24	T130514000	SOPORTE RESORTE	SPRING SUPPORT	1	1						
	Q032032000	TORNILLO ALOMADO M5x15	CURVED SCREW M5X15	2	2						
25	T130511000	SUPLEMENTO SUJ. CERRADURA	ANCHORAGE SUPPL. LOCK	1	1						
26	Q352001000	PASADOR DE ALETAS 2X20	COTTER PIN 2X20	2	4						
27	T080503000	SUPLEMENTO ELEMENTO CIERRE	SUPPLEMENT LOCK ELEMENT	6	6						

MOD.	HORNOS	ZONA	PUERTA	PLANO	C-1983

ITEM	CODIGO	DENOMINACION	TEXTO	HGC-6/11	HGC-10/11						NOTAS
28	T080504000	ELEMENTO CIERRE	LOCK ELEMENT	2	2						
	Q262040000	ARANDELA GROW. A6 A.304	WASHER GROW. A6 A.304	6	8						
	Q162040000	TUERCA EXAGONAL M6	HEXAGONAL NUT M6	6	8						
29	T130509000	MECANISMO CIERRE	LOCK MECHANISM	1	1						
	Q262040000	ARAND.GROW. A6 A.304	WASHER GROW. A6 A.304	2	2						
	Q162040000	TUERCA EXAGONAL M6	HEXAGONAL NUT M6	2	2						
	Z608410000	CASQUILLO AMARRE TECLADO	KEYBOARD ANCHORAGE BUSHI	2	2						
30	T080502000	TAPA CIERRE PUERTA 6/11	DOOR LOCK COVER 6/11	1	_						
30	T110502000	TAPA CIERRE PUERTA 20/11	DOOR LOCK COVER 20/11	_	1						
	Q032021000	TORNILLO ALOMADO M4X10	CURVED SCREW M4X10	4	4						
	Q222041000	REMACHE EXAGONAL M4 (INOX)	HEXAGONAL RIVET M4 (INOX)	4	4						
31	T110506000	ENGANCHE PUERTA	DOOR FASTENER	2	2						
	Q043145000	TORN. AVELLANADO 6X30 LATON	BRASSCOUNTERSUNK 6X30	4	4						
32	R660538000	CALZO DE ENGANCHE	FASTENER WEDGE	6	6						
	Q221343000	REMACHE EXAGONAL M.6	HEXAGONAL RIVET M.6	4	4						
33	T130508000	EJE DE MANILLA PUERTA	DOOR HANDLE SHAFT	1	1						
	T130505000	CASQUILLO	BUSHING	1	1						
34	R020502000	TUBO ALARGADERA 10-11	EXTENSION PIPE 10-11	_	2						

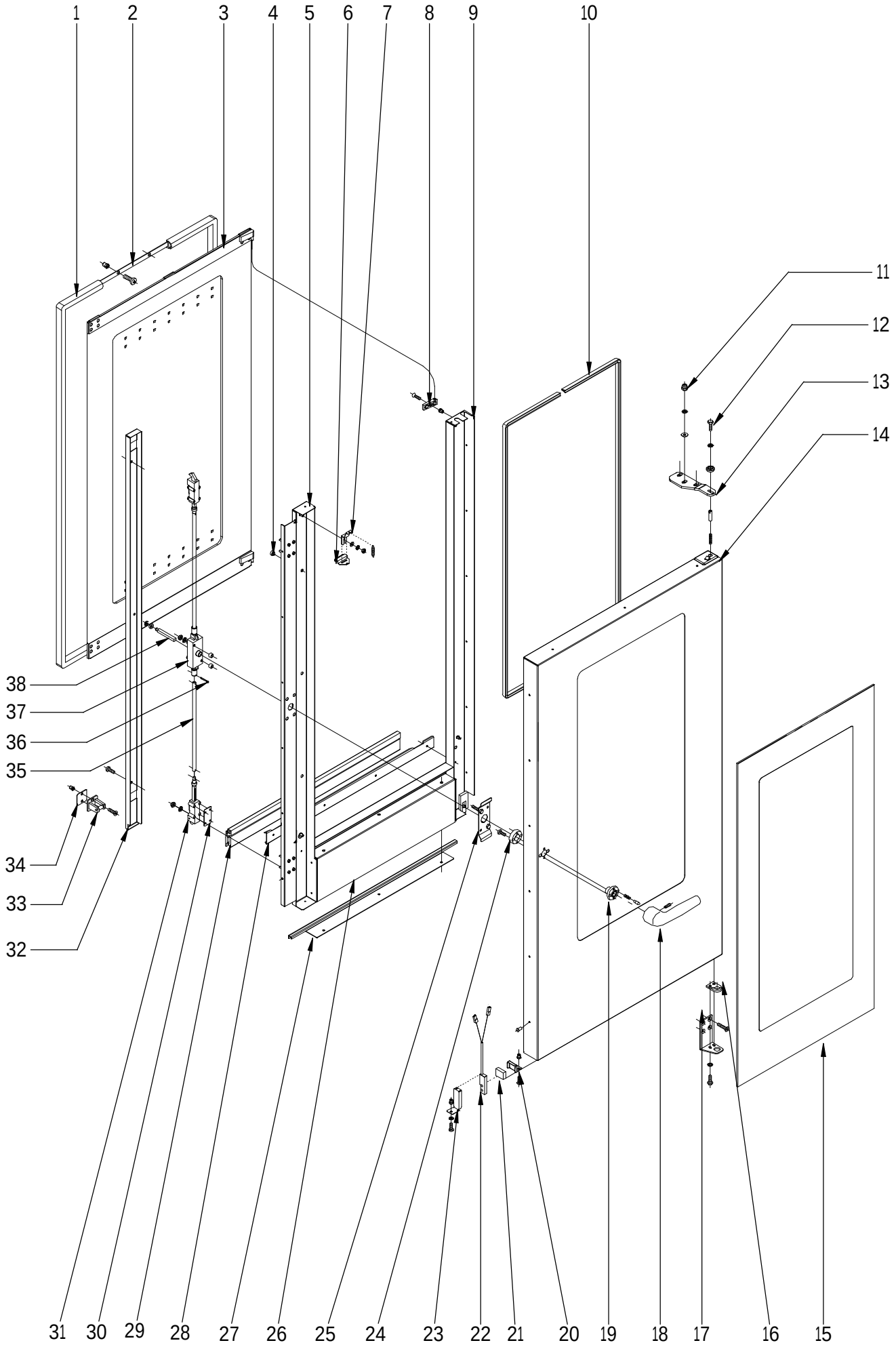

N plano	Firma	Fecha	Aparato		Lamina	
C-1984		2008-02	PUERTA HORNO HGC-20/11		3	Fagor Industrial S.Coop. Oñate

MOD.	HORNOS	ZONA	PUERTA	PLANO	C-1984

ITEM	CODIGO	DENOMINACION	TEXTO	HGC-20/11							NOTAS
	1100003126	**KIT PUERTA 20/11 COMPLETA**	**DOOR KIT 20/11 COMPLETE**	**1**							
1	R090510000	JUNTA DE PUERTA 20-11	DOOR SEAL 20-11	1							
2	R090512000	FIJACION JUNTA COMP 20/11	COMPLETE SEAL ATTACHMENT	1							
	Q032021000	TORN.ALOM.M4X10	CURVED SCREW M4X10	40							
	Q222041000	REMACHE EXAGONAL M4 (INOX)	HEXAGONAL RIVET M4 (INOX)	40							
3	**1100003125**	**KIT CRISTAL INTER. 20/11 COMPL.**	**INTER. GLASS KIT 20/11 COMPL**	**1**							
4	T300513000	TOPE CRISTAL INTERIOR 10/21	INTERIOR GLASS BUFFER 10/21	8							
5	R090569000	CONTRAP MANILLA COMPL 20/11	COMPLETE HANDLE DOOR 20/11	1							
6	T300514000	PESTILLO 10/21	LATCH 10/21	2							
7	R090558000	BASE DE PESTILLO	LATCH BASE	2							
	Q302022000	ARANDELA 16X6X1.2 A.304	WASHER 16X6X1.2 A.304	2							
	Q162040000	TUERCA EXAGONAL M6	HEXAGONAL NUT M6	2							
	Q242040000	ARANDELA ABANICO A6 A.304	FAN WASHER A6 A.304	2							
	R660605000	MUELLE TENSOR	TENSIONING SPRING	2							
8	R670615000	BASE DE BISAGRA	HINGE BASE	2							
	Q222011000	REMACHE EXAGONAL M.5	HEXAGONAL RIVET M.5	2							
	Q042032000	TORNILLO AVELLANADO M5X15	COUNTERSUNK BOLT M5x15	2							
9	R090567000	CONTRAPUERTA BISA COMP 20/11	COMP. HINGE DOOR REVERSE 2	1							
10	3715200000	JUNTA CRISTAL	WINDOW SEAL	1							
11	Q212051000	TUERCA SOMBRERETE M8	COWL NUT M8	3							
	Q242050000	ARANDELA ABANICO A8 A.304	FAN WASHER A8 A.304	3							
	Q302025000	ARANDELA 8,4x20x1,5 A.304	WASHER 8.4x20x1.5 A.304	3							
12	Q012042000	TORNILLO EXAGONAL M6x15	HEXAGONAL BOLT M6x15	1							
	Q242040000	ARANDELA ABANICO A6 A.304	FAN WASHER A6 A.304	1							
	R662807000	ARANDELA AMARRE	ANCHORAGE WASHER	1							
13	T300520000	BISAGRA SUPERIOR	UPPER HINGE	1							
	R660534000	EJE SUPERIOR	UPPER SHAFT	1							
	Z850519000	RESORTE 06329	SPRING 06329	1							
14	R090565000	PUERTA COMPLETA 20-11	COMPLETE DOOR 20-11	1							
	Q412002000	REMACHE AVINOX Ø4x10MM	RIVET AVINOX Ø4x10MM	14							
15	R090562000	CRISTAL EXTERIOR 20/11	EXTERIOR GLASS 20/11	1							

MOD.	HORNOS	ZONA	PUERTA	PLANO	C-1984

ITEM	CODIGO	DENOMINACION	TEXTO	HGC-20/11							NOTAS
16	R660549000	GUIA EJE INFERIOR FUNDIDO	LOWER SHAFT GUIDE, CAST IRC	1							
	Q062040000	TORNILLO AVELLANADO M6X16	COUNTERSUNK BOLT M6x16	4							
17	R090561000	BISAGRA INFERIOR PLEGADA	LOWER FOLDER HINGE	1							
	Q242040000	ARANDELA ABANICO A6 A.304	FAN WASHER A6 A.304	2							
	Q012041000	TORNILLO EXAGONAL M6x10 A304	HEXAGONAL BOLT M6x10 A304	2							
18	T130502000	MANILLA COMPLETA	COMPLETE HANDLE	1							
	Q132042000	VARILLA ROSCADA M6X15	THREADED ROD M6X15	1							
	T130510000	TAPON Ø 16 BAGAL Ext.	COVER Ø 16 BAGAL Ext.	1							
19	T130515000	GUIA MANILLA	HANDLE GUIDE	1							
	T490518000	PITON ENGANCHE PUERTA	DOOR FASTENER SPIKE	2							
	T130506000	RESORTE 34548	SPRING 34548	2							
20	T300525000	SOPORTE IMAN	MAGNET BRACKET	1							
	Q222011000	REMACHE EXAGONAL M.5	HEXAGONAL RIVET M.5	1							
	Q032031000	TORNILLO ALOMADO M5X10	CURVED SCREW M5X10	1							
21	T300526000	IMAN	MAGNET	1							
22	Z100522000	INTERRUPTOR MAGNETICO	MAGNETIC SWITCH	1							
23	T302819000	SOPORTE MICRO PUERTA	DOOR MICRO SWITCH	1							
	Q222011000	REMACHE EXAGONAL M.5	HEXAGONAL RIVET M.5	1							
	Q242030000	ARANDELA ABANICO A5 A.304	FAN WASHER A5 A.304	1							
	Q152004000	TORNIL. APLASTADO M5X13 A 304	FLAT HEADED SCREW M5x13 A 3	1							
24	T130514000	SOPORTE RESORTE	SPRING SUPPORT	1							
	Q032032000	TORNILLO ALOMADO M5x15	CURVED SCREW M5X15	2							
25	T130511000	SUPLEMENTO SUJ. CERRADURA	ANCHORAGE SUPPL. LOCK	1							
26	R090570000	CHAPA AMARRE CONTRAP 20/11	DOOR REVERSE PLATE FASTEN	1							
27	R090571000	SUPERIOR CIERRE PUERTA 20/11	DOOR UPPER LOCK 20/11	1							
28	R090553000	CHAPA JUNTA CONTRAPUERTA	DOOR REVERSE SEAL PLATE	1							
29	R090551000	JUNTA CIERRE INFERIOR 20/11	SEAL LOWER LOCK 20/11	1							
30	T080503000	SUPLEMENTO ELEMENTO CIERRE	SUPPLEMENT LOCK ELEMENT	6							
31	T080504000	ELEMENTO CIERRE	LOCK ELEMENT	2							
	Q262040000	ARAND.GROW. A6 A.304	WASHER GROW. A6 A.304	8							
	Q162040000	TUERCA EXAGONAL M6	HEXAGONAL NUT M6	8							

MOD.	HORNOS	ZONA	PUERTA	PLANO	C-1984

ITEM	CODIGO	DENOMINACION	TEXTO	HGC-20/11							NOTAS
32	R090557000	TAPA CIERRE PUERTA 20/11	DOOR LOCK COVER 20/11	1							
	Q032021000	TORNILLO ALOMADO M4X10	CURVED SCREW M4X10	4							
	Q222041000	REMACHE EXAGONAL M4 (INOX)	HEXAGONAL RIVET M4 (INOX)	4							
33	T110506000	ENGANCHE PUERTA	DOOR FASTENER	2							
	Q043145000	TORN. AVELLANADO 6X30 LATON	HEXAGONAL BRASS COUNTERS	4							
34	R660538000	CALZO DE ENGANCHE	FASTENER WEDGE	6							
	Q221343000	REMACHE EXAGONAL M.6	HEXAGONAL RIVET M.6	4							
35	R090514000	TUBO ALARGADERA 20-11/20-21	EXTENSION PIPE 20-11/20-21	2							
36	Q352001000	PASADOR DE ALETAS 2X20	COTTER PIN 2X20	4							
37	T130509000	MECANISMO CIERRE	LOCK MECHANISM	1							
	Q262040000	ARAND.GROW. A6 A.304	WASHER GROW. A6 A.304	2							
	Q162040000	TUERCA EXAGONAL M6	HEXAGONAL NUT M6	2							
	Z608410000	CASQUILLO AMARRE TECLADO	KEYBOARD ANCHORAGE BUSHI	2							
38	T490519000	EJE DE MANILLA PUERTA	DOOR HANDLE SHAFT	1							
	T130505000	CASQUILLO	BUSHING	1							

N.plano
C-1985

Firma

Fecha
2008-02

Aparato
HORNOS HGC-6/11; 10/11

MUEBLE INTERIOR

Lamina
4

Fagor Industrial S.Coop.
Oñate

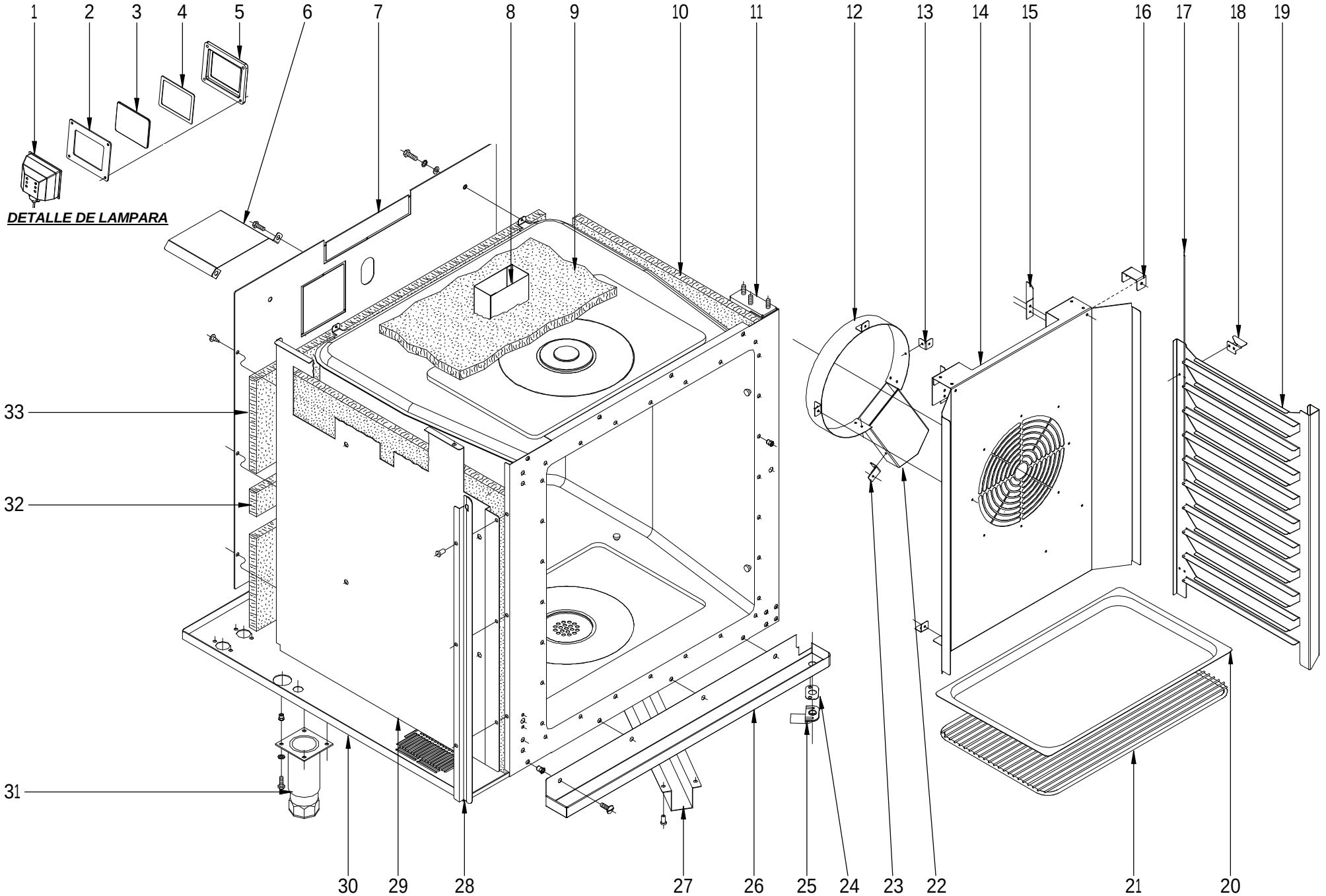

MOD.	HORNOS	ZONA	MUEBLE INTERIOR	PLANO	C-1985

ITEM	CODIGO	DENOMINACION	TEXTO	HGC-6/11	HGC-10/11						NOTAS
1	T303023000	PORTALAMPARAS	LAMP HOLDER	1	1						
2	T303026000	JUNTA EXTERIOR LAMPARA	LAMP EXTERIOR SEAL	1	1						
3	T303025000	CRISTAL LAMPARA	LAMP GLASS	1	1						
4	T303027000	JUNTA INTERIOR LAMPARA	LAMP INTERIOR SEAL	1	1						
5	T303047000	MARCO LAMPARA	LAMP FRAME	1	1						
	R663013000	LAMPARA 10W-12V	LAMP 10W-12V	1	1						
	Q222041000	REMACHE EXAGONAL M.4 INOX	HEXAGONAL RIVET M4 (INOX)	4	4						
	Q032021000	TORNILLO ALOMADO M4X10	CURVED SCREW M4X10	4	4						
6	T142635000	TEJADILLO MOTOR	MOTOR ROOF	1	1						
	Q412002000	REMACHE AVINOX Ø4x10MM	RIVET AVINOX Ø4x10MM	4	4						
S/N	R142614000	TEJADILLO SOPLANTE	BLOWER COVER	1	1						
7	T072705000	SOP. AISLANTE POST. 6-11 GAS	REAR INSULATION SUP. 6-11 G	1	_						
7	T112631000	SOP. AISLANTE POST. 10-11 GAS	REAR INSULATION SUP. 10-11 G	_	1						
	Q221343000	REMACHE EXAGONAL M.6	HEXAGONAL RIVET M.6	6	6						
	Q232040000	ARANDELA A6	WASHER A6	12	12						
	Q262040000	ARANDELA GROW. A6 A.304	WASHER GROW. A6 A.304	12	12						
	Q012042000	TORNILLO EXAGONAL M6x15	HEXAGONAL BOLT M6x15	12	12						
8	T012605000	CHIMENEA INTERIOR	INTERIOR FLUEPIPE	1	1						
	Q412002000	REMACHE AVINOX Ø4x10MM	RIVET AVINOX Ø4x10MM	6	6						
9	R662614000	AISLANTE 650X650X20	INSULATION 650X650X20	5	5						
10	R662613000	AISLANTE 650X530X20	INSULATION 650X530X20	5	_						
10	R672630000	AISLANTE 770X650X20	INSULATION 770X650X20	_	5						
11	T082622000	CUERPO COMPLETO HGC-6/11	COMPLETE BODY HGC -6/11	1	_						
11	T012625000	CUERPO COMPLETO HGC-10/11	COMPLETE BODY HGC -10/11	_	1						
	R662636000	REFUERZO BASE CUERPO INTER.	REINFORCEMENT BASE INTER. E	1	1						
	Q162040000	TUERCA EXAGONAL M6	HEXAGONAL NUT M6	8	8						
	Q232040000	ARANDELA A6	WASHER A6	8	8						
	Q262040000	ARANDELA GROW. A6 A.304	WASHER GROW. A6 A.304	8	8						
	Q222041000	REMACHE EXAGONAL M4 (INOX)	HEXAGONAL RIVET M4 (INOX)	28	28						
12	T082620000	SUPLEMENTO CUBREV. HGC6/11	SUPPLEMENTARY FAN COVER. H	1	_						
12	T012620000	SUPLEMENTO CUBREV. HGC10/11	SUPPLEMENTARY FAN COVER. H	_	1						

MOD.	HORNOS	ZONA	MUEBLE INTERIOR	PLANO	C-1985

ITEM	CODIGO	DENOMINACION	TEXTO	HGC-6/11	HGC-10/11						NOTAS
13	T302643000	FIJACIÓN SUPLEMENTO	SUPPLEMENTARY FASTENING	3	7						
	Q412002000	REMACHE AVINOX Ø4x10MM	RIVET AVINOX Ø4x10MM	6	14						
14	R692615000	CUBREVENTILADOR HGC 6/11	FAN COVER HGC 6/11	1	_						
14	R672611000	CUBREVENTILADOR HGC 10/11	FAN COVER HGC 10/11	_	1						
	Q152014000	PERNO SOLDADO M5X10	WELDED BOLT M5X10	_	2						
15	R092677000	ESCUADRA SUJECCION	FASTENING BRACKET	2	2						
	Q412002000	REMACHE AVINOX Ø4x10MM	RIVET AVINOX Ø4x10MM	4	4						
16	R092680000	FIJACIÓN SUPLEMENTO DOBLE	DOUBLE SUPPL. ATTACHMENT	2	_						
	Q412002000	REMACHE AVINOX Ø4x10MM	RIVET AVINOX Ø4x10MM	4	_						
17	R662693000	TOPE PORTABANDEJAS 6/11	TRAY HOLDER BUFFER 6/11	2	_						
17	R672692000	TOPE PORTABANDEJAS 10/11	TRAY HOLDER BUFFER 10/11	_	2						
18	R672691000	ESCUADRA SUJECCION 6-10/11	FASTENING BRACKET 6-10/11	4	4						
19	R692616000	GUIA BANDEJAS DERECHA 6/11	RIGHT TRAY GUIDE 6/11	1	_						
19	R672612000	GUIA BANDEJAS DERECHA 10/11	RIGHT TRAY GUIDE 10/11	_	1						
S/Nº	R692617000	GUIA BANDEJAS IZQUIERDA 6/11	LEFT TRAY GUIDE 6/11	1	_						
S/Nº	R672613000	GUIA BANDEJAS IZQUIERDA 10/11	LEFT TRAY GUIDE 10/11	_	1						
20	R252816000	BANDEJA 1/1 P:20	TRAY 1/1 P:20	1	1						
21	R672665000	PARRILLA 1X1 (REF. 2025201)	GRILLE 1X1 (REF. 2025201)	1	1						
22	T082618000	CORBATA SOLDADA HGC 6/11	WELDED BOLT HGC 6/11	1	_						
22	T012624000	CORBATA SOLDADA HGC 10/11	WELDED BOLT HGC 10/11	_	1						
	Q232030000	ARANDELA A5	WASHER A5	2	2						
	Q242030000	ARANDELA ABANICO A5 A.304	FAN WASHER A5 A.304	2	2						
	Q162030000	TUERCA EXAGONAL M5	HEXAGONAL NUT M5	2	2						
23	T082619000	FIJACIÓN CORBATA	BOLT FASTENING	2	2						
	Q412002000	REMACHE AVINOX Ø4x10MM	RIVET AVINOX Ø4x10MM	4	4						
24	T302845000	JUNTA RECOGEAGUAS	WATER COLLECTOR SEAL	1	1						
	Q242030000	ARANDELA ABANICO A5 A.304	FAN WASHER A5 A.304	2	2						
	Q213131000	TUERCA SOMBRERETE M5	COWL NUT M5	2	2						
25	T302844000	DESAGÜE RECOGEAGUAS	WATER COLLECTOR DRAIN	1	1						

MOD.	HORNOS	ZONA	MUEBLE INTERIOR	PLANO	C-1985

ITEM	CODIGO	DENOMINACION	TEXTO	HGC-6/11	HGC-10/11						NOTAS
26	T112852000	RECOGEAGUAS COMPL. 6 10/11	COMPL. WATER COLLECTOR 6 1	1	1						
	Q221343000	REMACHE EXAGONAL M6	HEXAGONAL RIVET M6	4	4						
	Q152017000	TORNILLO AMARRE M6X13 A304	FASTENING BOLT M6X13 A304	4	4						
27	R672833000	CUBRE DESAGUE 6/11 10/11	DRAIN COVER 6/11 10/11	1	1						
28	R662682000	PROTECTOR PORTAMANDOS 6/11	CONTROL HOLDER PROT. 6/11	1	_						
28	R672674000	PROTECTOR PORTAMANDOS10/11	CONTROL HOLDER PROT.10/11	_	1						
	Q412002000	REMACHE AVINOX Ø4x10MM	RIVET AVINOX Ø4x10MM	2	2						
29	T072614000	SOPORTE LATER. AISLANTE 6/11	SIDE SUPP. INSULATION 6/11	1	_						
29	T112624000	SOPORTE LATER. AISLANTE 10/11	SIDE SUPP. INSULATION 10/11	_	1						
	Q151301000	PHILIPS 8X5/8	PHILIPS 8X5/8	3	3						
30	R722900000	BASE EXT. HORNO HGC6/11-10/11	EXT.BASE OVEN HGC6/11-10/11	1	1						
31	X260151000	PATA REGULABLE	ADJUSTABLE LEG	4	4						
	Q221343000	REMACHE EXAGONAL M6	HEXAGONAL RIVET M6	16	16						
	Q242040000	ARANDELA ABANICO A6 A.304	FAN WASHER A6 A.304	16	16						
	Q012042000	TORNILLO EXAGONAL M6x15	HEXAGONAL BOLT M6x15	16	16						
32	R662616000	AISLANTE 560X60X20	INSULATION 560X60X20	4	4						
33	R672631000	AISLANTE 670X200X20	INSULATION 670X200X20	_	2						

N.plano
C-1986

Firma

Fecha
2008-02

Aparato
HORNO HGC-20/11

MUEBLE INTERIOR

Lamina
5

Fagor Industrial S.Coop.
Oñate

FAGOR

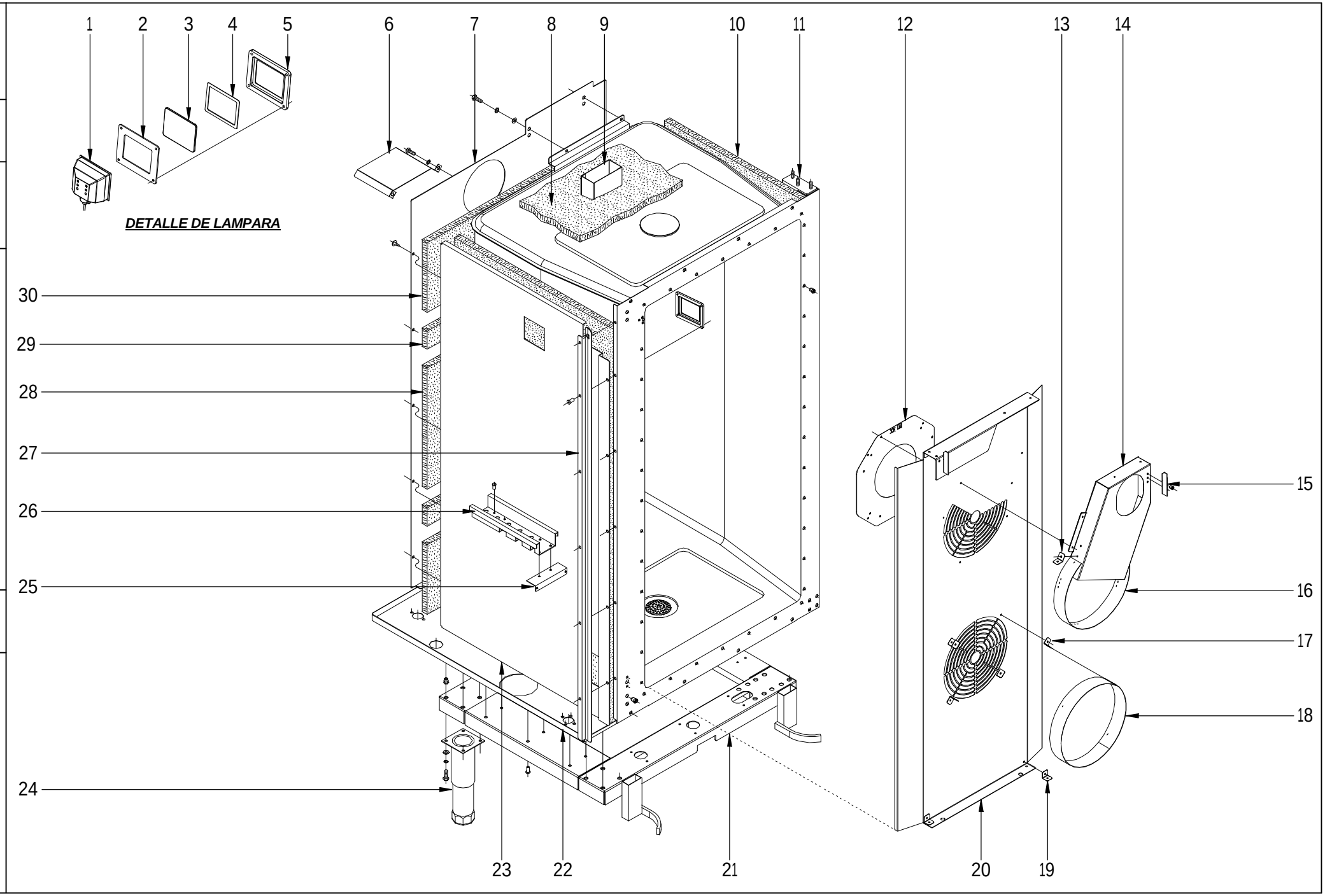

DETALLE DE LAMPARA

MOD.	HORNOS	ZONA	MUEBLE INTERIOR	PLANO	C-1986

ITEM	CODIGO	DENOMINACION	TEXTO	HGC-20/11							NOTAS
1	T303023000	PORTALAMPARAS	LAMP HOLDER	2							
2	T303026000	JUNTA EXTERIOR LAMPARA	LAMP EXTERIOR SEAL	2							
3	T303025000	CRISTAL LAMPARA	LAMP GLASS	2							
4	T303027000	JUNTA INTERIOR LAMPARA	LAMP INTERIOR SEAL	2							
5	T303047000	MARCO LAMPARA	LAMP FRAME	2							
	R663013000	LAMPARA 10W-12V	LAMP 10W-12V	2							
	Q222041000	REMACHE EXAGONAL M.4 INOX	HEXAGONAL RIVET M4 (INOX)	8							
	Q032021000	TORNILLO ALOMADO M4X10	CURVED SCREW M4X10	8							
6	T142635000	TEJADILLO MOTOR	MOTOR ROOF	2							
	Q412002000	REMACHE AVINOX Ø4x10MM	RIVET AVINOX Ø4x10MM	4							
S/N	R142614000	TEJADILLO SOPLANTE	BLOWER COVER	1							
7	T132628000	SOPORTE AISLANTE POS. 20/11G	REAR INSULATION SUP. 20/11G	1							
	Q221343000	REMACHE EXAGONAL M.6	HEXAGONAL RIVET M.6	12							
	Q232040000	ARANDELA A6	WASHER A6	24							
	Q262040000	ARAND.GROW. A6 A.304	WASHER GROW. A6 A.304	24							
	Q012042000	TORNILLO EXAGONAL M6x15	HEXAGONAL BOLT M6x15	24							
8	R662614000	AISLANTE 650X650X20	INSULATION 650X650X20	6							
9	T012605000	CHIMENEA INTERIOR	INTERIOR FLUEPIPE	1							
	Q412002000	REMACHE AVINOX Ø4x10MM	RIVET AVINOX Ø4x10MM	6							
10	R092622000	AISLANTE 1370X650X20	INSULATION 1370X650X20	5							
11	T102612000	CUERPO COMPLETO HGC-20/11	COMPLETE BODY HGC -20/11	1							
12	T322607000	REDUCC. CUBREVENT. 60HzØ160	FANCOVER REDUC. 60HzØ160	2							SOLO HORNOS A 60 HZ
13	T142640000	PESTAÑA CIERRE CUBREVENTIL.	FAN COVER LOCK LATCH	2							
14	T142639000	CONDUCCION DE HUMOS COMP,	COMP. SMOKE PIPING	1							
15	R092677000	ESCUADRA SUJECCION	FASTENING BRACKET	2							
16	T132645000	SUPL. CUBREVENTILAD. ABIERTO	SUPPL. FAN COVER OPEN	1							
17	T302643000	FIJACIÓN SUPLEMENTO	SUPPLEMENTARY FASTENING	7							
	Q412002000	REMACHE AVINOX Ø4x10MM	RIVET AVINOX Ø4x10MM	14							
18	T132644000	SUPLEMENT. CUBREVENTILADOR	SUPPLEMENT. FAN COVER	1							
19	T302643000	FIJACIÓN SUPLEMENTO	SUPPLEMENTARY FASTENING	4							
	Q412002000	REMACHE AVINOX Ø4x10MM	RIVET AVINOX Ø4x10MM	8							

MOD.	HORNOS	ZONA	MUEBLE INTERIOR	PLANO	C-1986

ITEM	CODIGO	DENOMINACION	TEXTO	HGC-20/11							NOTAS
20	T102614000	CUBREVENTILADOR 20/11G	FAN COVER 20/11G	1							
	Q412002000	REMACHE AVINOX Ø4x10MM	RIVET AVINOX Ø4x10MM	23							
21	T132831000	REFUERZO APOYOS COMP.20/11	COMP. SUPPORT REINFO.20/11	1							
	Q412002000	REMACHE AVINOX Ø4x10MM	RIVET AVINOX Ø4x10MM	24							
22	T102820000	BASE EXTERIOR DE HGC-20/11	EXTERIOR BASE HGC- 20 / 11	1							
23	T132610000	SOPORTE LATER. AISLANTE 20/11	SIDE SUPP. INSULATION 20/11	1							
	Q151301000	PHILIPS 8X5/8	PHILIPS 8X5/8	5							
24	R092830000	PATA REF. AA179EOAQ47CCN	LEG REF. AA179EOAQ47CCN	4							
	Q221343000	REMACHE EXAGONAL M6	HEXAGONAL RIVET M6	16							
	Q242040000	ARANDELA ABANICO A6 A.304	FAN WASHER A6 A.304	16							
	Q012042000	TORNILLO EXAGONAL M6x15	HEXAGONAL BOLT M6x15	16							
25	R092693000	FIJACION PANEL LATERAL	SIDE PANEL ATTACHMENT	1							
	Q412002000	REMACHE AVINOX Ø4x10MM	RIVET AVINOX Ø4x10MM	3							
26	R342802000	GUIA CUADRO ELECTRICO	SWITCHBOARD GUIDE	1							
27	R092670000	PROTECTOR PORTAMANDOS	CONTROL HOLDER PROTECT.	1							
	Q412002000	REMACHE AVINOX Ø4x10MM	RIVET AVINOX Ø4x10MM	5							
28	R092624000	AISLANTE 670X400X20	INSULATION 670X400X20	2							
29	R662616000	AISLANTE 560X60X20	INSULATION 560X60X20	6							
30	R672631000	AISLANTE 670X200X20	INSULATION 670X200X20	1							

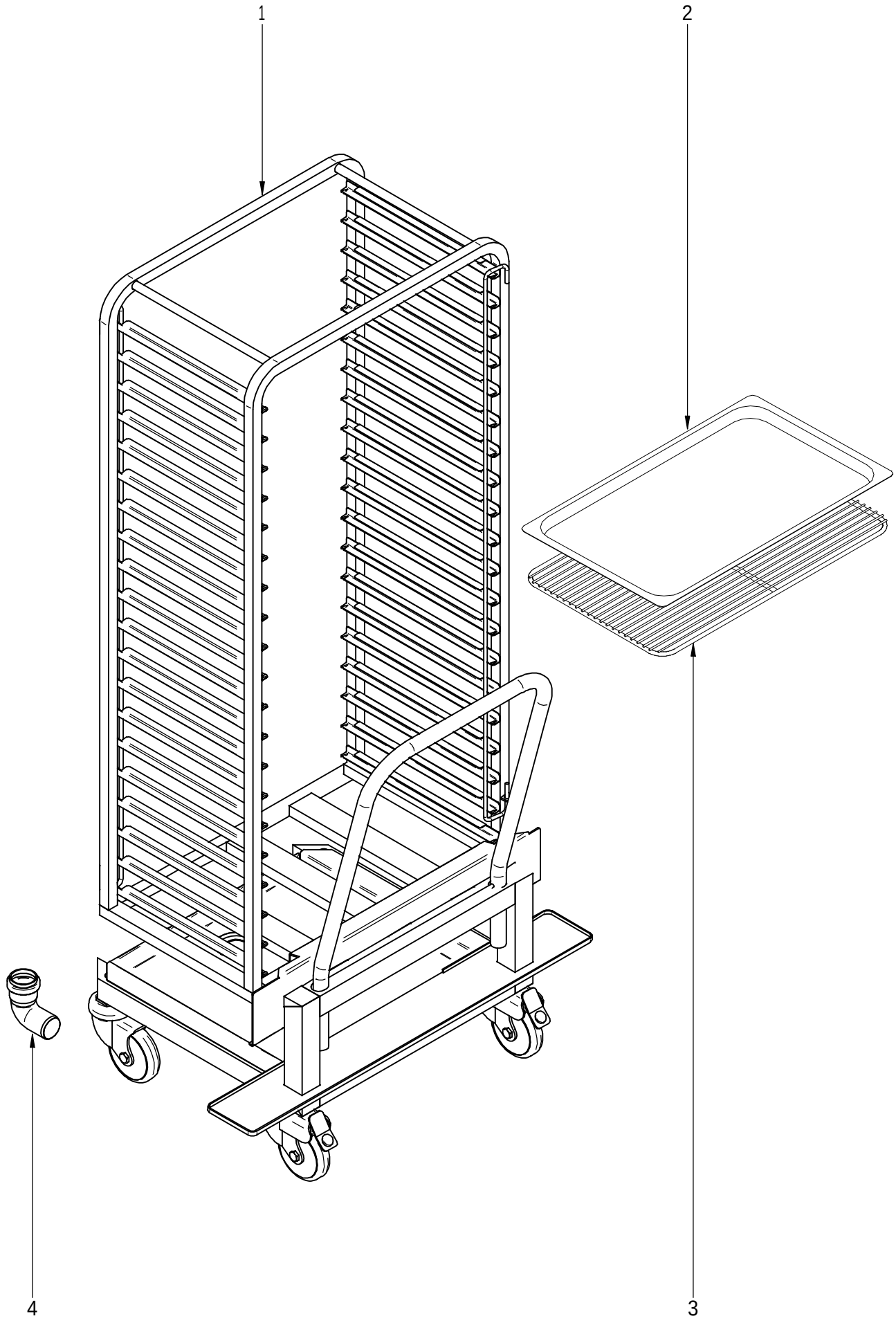

N plano	Firma	Fecha	Aparato		Lamina	
C-1987		2008-02	CARRO HORNO HGC-20/11		6	Fagor Industrial S.Coop. Oñate

MOD.	HORNOS	ZONA	CARRO	PLANO	C-1987

ITEM	CODIGO	DENOMINACION	TEXTO	HGC-20/11							NOTAS
1	R092857000	CARRO 20/11	TROLLEY 20/11	1							
2	R252816000	BANDEJA 1/1 P:20	TRAY 1/1 P:20	1							
3	R672665000	PARRILLA 1X1 (REF. 2025201)	GRILLE 1X1 (REF. 2025201)	1							
4	T492853000	CODO DESAGÜE CARRO 20/21	TROLLEY DRAINAGE L-BEND 20/	1							

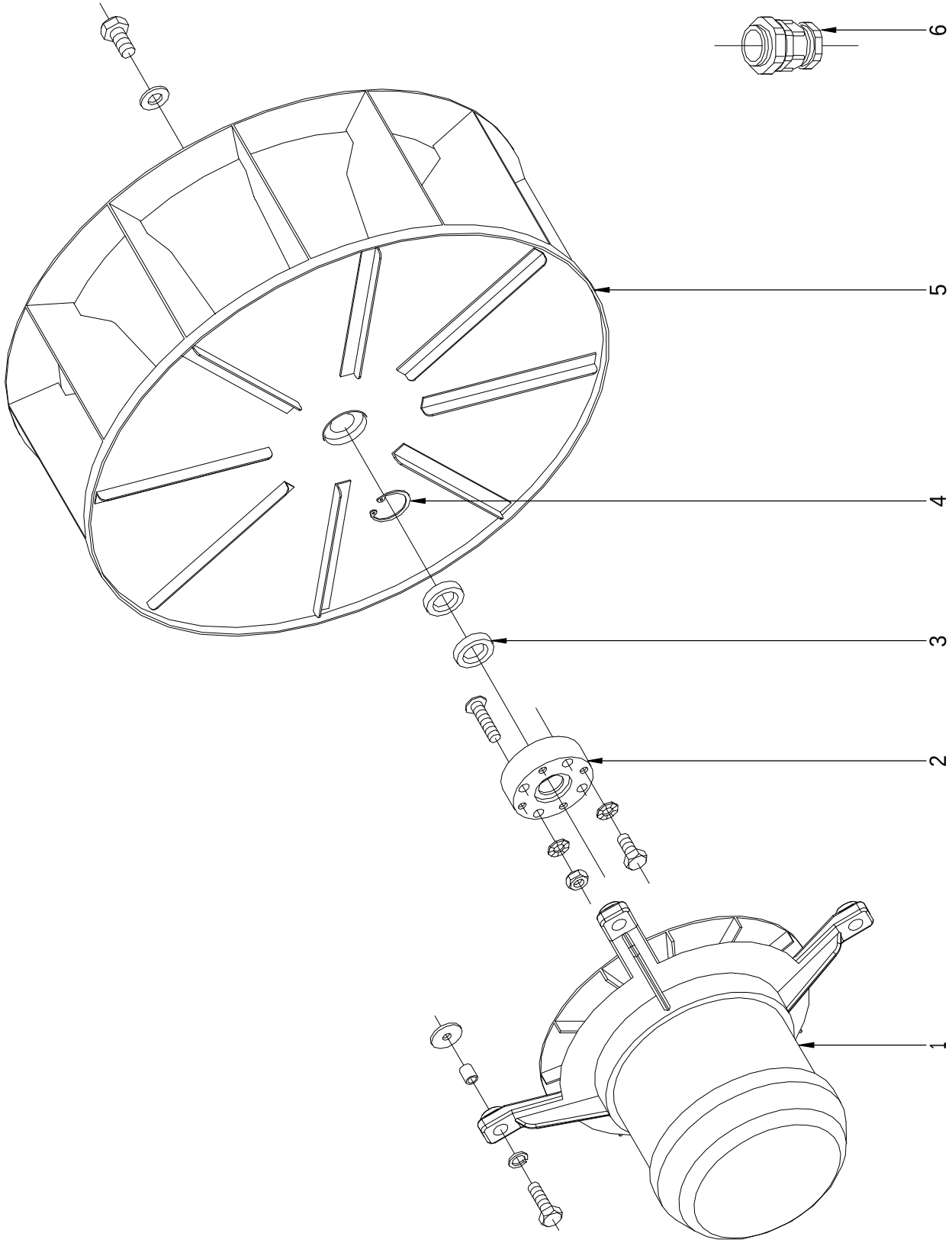

N plano	Firma	Fecha	Aparato	Lamina	
C-1988		2008-02	TURBINA HORNO HGC-6/11; 10/11; 20/11	7	Fagor Industrial S.Coop. Oñate

MOD.	HORNOS	ZONA	TURBINA	PLANO	C-1988

ITEM	CODIGO	DENOMINACION	TEXTO	HGC-6/11	HGC-10/11	HGC-20/11					NOTAS
1	R703049000	MOTOR DOBLE GIRO 1VEL.450W.	DOUBLE ROTATION MOTOR 1VE	1	1	2					
	Q012044000	TORNILLO EXAGONAL M6X25	HEXAGONAL BOLT M6x25	4	4	8					
	Q262040000	ARANDELA GROW. A6 A.304	WASHER GROW. A6 A.304	4	4	8					
	Q301304000	ARANDELA PLANA 23X6.5X2	FLAT WASHER 23X6.5X2	4	4	8					
2	R662684000	CASQUILLO RETEN	SEAL BUSHING	1	1	2					
	R662685000	JUNTA CASQUILLO RETEN	SEAL BUSHING GASKET	1	1	2					
	Q262040000	ARANDELA GROW. A6 A.304	WASHER GROW. A6 A.304	4	4	8					
	Q162040000	TUERCA EXAGONAL M6	HEXAGONAL NUT M6	4	4	8					
	Q232040000	ARANDELA A6	WASHER A6	4	4	8					
3	R662627000	RETEN 17X28X7V	SEAL 17X28X7V	2	2	4					
4	Q302023000	ANILLO DE SEGURIDAD Ø 28X1.2	SAFETY RING Ø 28X1.2	1	1	2					
5	T083005000	TURBINA ALAB. REC. Ø280x127	FAN ALAB. REC. Ø280x127	1	_	_					
5	R703050000	TURBINA REC Ø350X127 HANNING	STRAIGHT FAN Ø350X127 HANNI	_	1	2					
	R763010000	ARANDELA SEGURIDAD HANNING	SAFETY WASHER HANNING	1	1	2					
	Q012063000	TORNIL. EXAGONAL M10X20 A.304	HEXAGONAL BOLT M10X20 A.304	1	1	2					
6	R073004000	PRENSA ESTOPAS	STUFFING BOX	1	1	1					

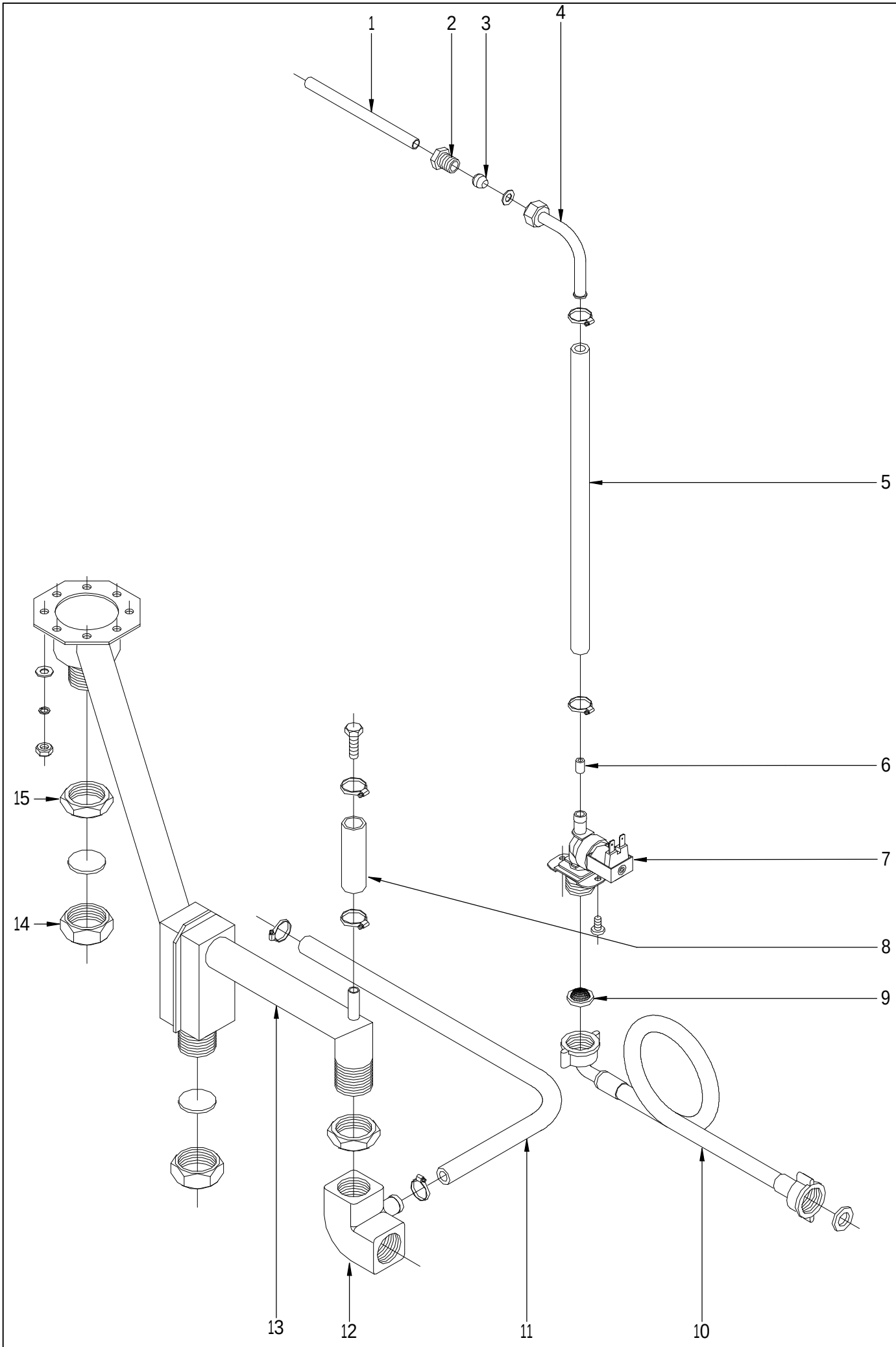

N plano	Firma	Fecha	Aparato	CIRCUITO DE AGUA	Lamina	
C-1989		2008-02	HORNO HGC-6/11; 10/11; 20/11		8	Fagor Industrial S.Coop. FAGOR Oñate

MOD.	HORNOS	ZONA	CIRCUITO DE AGUA	PLANO	C-1989

ITEM	CODIGO	DENOMINACION	TEXTO	HGC-6/11	HGC-10/11	HGC-20/11					NOTAS
1	R695033000	TUBO INYECTOR 6/11	INJECTOR PIPE 6/11	1	1	1					
2	R695003000	MANGUITO CIERRE	CLOSING SLEEVE	1	1	1					
3	R695004000	BICONO	BICONE	1	1	1					
	Q306026000	ARANDELA PLANA 14X8.5X1.5	FLAT WASHER 14X8.5X1.5	1	1	1					
4	R695017000	TUBO CONDUCCION AGUA	WATER DUCT PIPE	1	1	1					
5	3676900000	TUBO GOMA NEGRA Ø17*10	BLACK RUBBER PIPE Ø17*10	1	1	1					
	Q881302000	ABRAZADERA ELASTICA 12*20	ELASTIC CLAMP 12*20	2	2	2					
6	R665041000	REGULADOR 0,25L. ROJO	REGULATOR 0.25L. RED	1	1	_					
6	R715011000	REGULADOR 0,5L. NARANJA	REGULATOR 0.5L. ORANGE	_	_	1					
7	Z701135000	ELECTR. SIMP.220V COD.255.208	ELECTR. SIMP.220V COD.255.208	1	1	1					
	Q032021000	TORNILLO ALOMADO M4x10	CURVED SCREW M4X10	2	2	2					
8	3676900000	TUBO GOMA NEGRA Ø17*10	BLACK RUBBER PIPE Ø17*10	1	1	1					
	Q881302000	ABRAZADERA ELASTICA 12*20	ELASTIC CLAMP 12*20	2	2	2					
9	Z701132000	FILTRO DE JUNTA N-3	SEAL FILTER N-3	1	1	1					
10	Z601114000	MANGUERA ENTRADA AGUA	WATER INTAKE HOSE	1	1	1					
11	3715600000	TUBO SILICONA 26X18	SILICONE PIPE 26X18	1	1	_					
	Q881305000	ABRAZADERA 25-40	CLAMP 25-40	2	2	_					
12	R665080000	CODO DESAGÜE	DRAINAGE L-BEND	1	1	_					
13	R725004000	TUBO DESAGUE HCG-6/101/201	DRAIN PIPE HCG-6/101/201	1	1	1					
14	R665053000	TUERCA TAPON 1"	PLUG NUT 1"	2	2	2					
	R015011000	ARANDELA Ø32	WASHER Ø32	2	2	2					
15	Q223014000	CONTRATUERCA 1 LATON	COUNTERNUT 1 BRASS	2	2	2					
	Q162040000	TUERCA EXAGONAL M6	HEXAGONAL NUT M6	8	8	8					
	Q232040000	ARANDELA A6	WASHER A6	8	8	8					
	Q262040000	ARANDELA GROW. A6 A.304	WASHER GROW. A6 A.304	8	8	8					

N.plano
C-1990

Firma

Fecha
2008-02

Aparato
HORNO HGC-6/11; 10/11; 20/11

PARTE FUNCIONAL GAS

Lamina
9

Fagor Industrial S.Coop.
Oñate

FAGOR

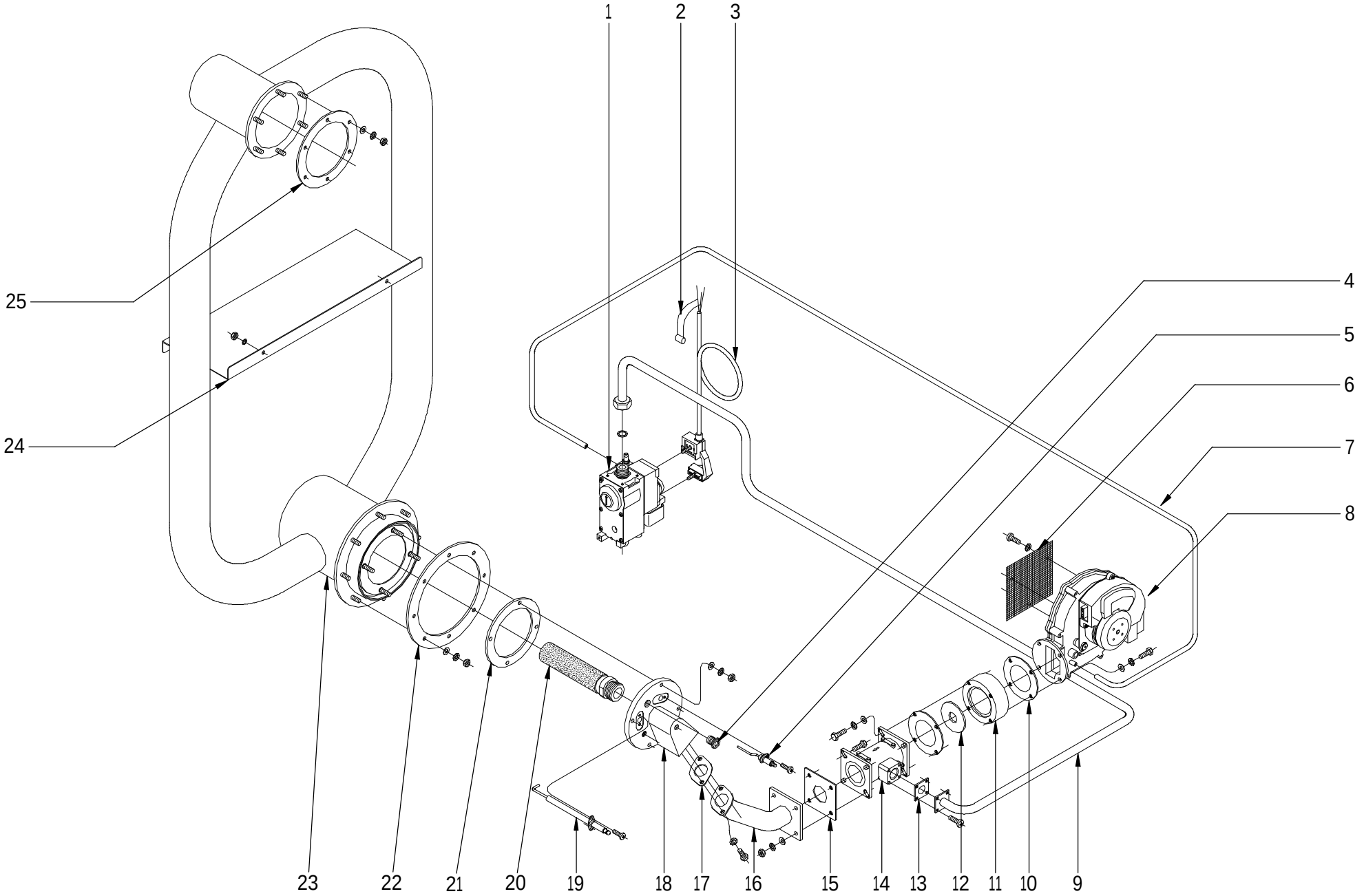

MOD.	HORNOS	ZONA	PARTE FUNCIONAL DE GAS	PLANO	C-1990

ITEM	CODIGO	DENOMINACION	TEXTO	HGC-6/11	HGC-10/11	HGC-20/11					NOTAS
1	T085010000	VALVULA REGUL. 6/11 BP 50 HZ	CONTROL VALVE 6/11 BP 50 HZ	1	_	_					
1	T085011000	VALVULA REGUL. 6/11 GN 50 HZ	CONTROL VALVE 6/11 GN 50 HZ	1	_	_					
1	T085016000	VALVULA REGUL. 6/11 BP 60 HZ	CONTROL VALVE 6/11 BP 60 HZ	1	_	_					
1	T085017000	VALVULA REGUL. 6/11 GN 60 HZ	CONTROL VALVE 6/11 GN 60 HZ	1	_	_					
1	T115097000	VALVULA REGUL. 10/11 BP 50 HZ	CONTROL VALVE 10/11 BP 50 HZ	_	1	_					
1	T115098000	VALVULA REGUL. 10/11 GN 50 HZ	CONTROL VALVE 10/11 GN 50 HZ	_	1	_					
1	T115100000	VALVULA REGUL. 10/11 BP 60 HZ	CONTROL VALVE 10/11 BP 60 HZ	_	1	_					
1	T115101000	VALVULA REGUL. 10/11 GN 60 HZ	CONTROL VALVE 10/11 GN 60 HZ	_	1	_					
1	T135037000	VALVULA REGUL. 20/11 BP 50 HZ	CONTROL VALVE 20/11 BP 50 HZ	_	_	1					
1	T135039000	VALVULA REGUL. 20/11 GN 50 HZ	CONTROL VALVE 20/11 GN 50 HZ	_	_	1					
1	T135040000	VALVULA REGUL. 20/11 BP 60 HZ	CONTROL VALVE 20/11 BP 60 HZ	_	_	1					
1	T135041000	VALVULA REGUL. 20/11 GN 60 HZ	CONTROL VALVE 20/11 GN 60 HZ	_	_	1					
2	Z233012000	CONDENSADOR ANTIPARASIT.	ANTI-PARASITE CONDENSER.	1	1	1					
3	T085012000	CONECTOR VALVULA HONEYW.	HONEYW. VALVE CONNECTOR	1	1	1					
4	R725015000	VISOR DE ENCENDIDO	IGNITION WINDOW	1	1	1					
	R725063000	CRISTAL DE VISOR	WINDOW GLASS	1	1	1					
5	T115712000	ELECTRODO DETECCION 6-10/11	DETECTION ELECTRODE 6-10/11	1	1	_					
5	T135705000	ELECTRODO DETECCION 20/11	DETECTION ELECTRODE 20/11	_	_	1					
	Q153021000	TORNILLO ALOMADO M4 X 10	CURVED SCREW M4 X 10	1	1	1					
6	T115095000	MALLA VENTILADOR	FAN GRILLE	1	1	1					
	Q032021000	TORNILLO ALOMADO M4X10	CURVED SCREW M4X10	4	4	4					
	Q242020000	ARANDELA ABANICO A4	FAN WASHER A4	4	4	4					
7	3702500000	TUBO GOMA NEGRO Ø 7*11	BLACK RUBBER PIPE Ø 7*11	1	1	1					
8	T083000000	VENTILADOR E.B.M.-RG130	FAN E.B.M.-RG130	1	1	1					
9	T015000000	CONDUCCION GAS COMPLETO	COMPLETE GAS PIPING	1	1	1					
	Q306012000	ARANDELA Ø18X13X1.5 KLING.SIL	WASHER Ø18X13X1.5 KLING.SIL	2	3	_					
	Q306024000	JUNTA Ø18X12.5X1.5	SEAL Ø18X12.5X1.5	_	_	3					
10	T115081000	JUNTA ACOPLAMIENT. SOPLANTE	BLOWER COUPLING SEAL	2	2	2					
11	T115076000	ACOPLAMIEN. VENTILADOR MIXER	MIXER FAN COUPLING	1	1	1					

MOD.	HORNOS	ZONA	PARTE FUNCIONAL DE GAS	PLANO	C-1990

ITEM	CODIGO	DENOMINACION	TEXTO	HGC-6/11	HGC-10/11	HGC-20/11					NOTAS
12	T085018000	ARANDELA Ø 14 BP y GN	WASHER Ø 14 BP y GN	1	_	_					
12	T115082000	ARANDELA Ø 18 BP	WASHER Ø 18 BP	_	1	_					
12	T115083000	ARANDELA Ø 20 GN	WASHER Ø 20 GN	_	1	_					
12	T135035000	ARANDELA Ø 22 BP	WASHER Ø 22 BP	_	_	1					
12	T135036000	ARANDELA Ø 26.3 GN	WASHER Ø 26.3 GN	_	_	1					
13	T115080000	JUNTA CONDUCCION MIXER	MIXER PIPING SEAL	1	1	1					
	Q032021000	TORNILLO ALOMADO M4X10	CURVED SCREW M4X10	4	4	4					
14	T085007000	MIXER SIT 25Kw.	MIXER SIT 25Kw.	1	_	_					
14	T115075000	MIXER SIT 35KW	MIXER SIT 35KW	_	1	1					
15	T115079000	JUNTA MIXER	MIXER SEAL	1	1	1					
16	T115077000	CONDUCTO GAS TAPA PRINCIPAL	MAIN COVER GAS PIPE	1	1	1					
17	T095021000	JUNTA CONDUCTO	PIPE SEAL	1	1	1					
	Q012032000	TORNILLO EXAGONAL M5X15 A304	HEXAGONAL BOLT M5x15 A304	2	2	2					
	Q242030000	ARANDELA ABANICO A5 A.304	FAN WASHER A5 A.304	2	2	2					
18	T085715000	TAPA PRINCIPAL HCG-6-11	MAIN COVER HCG-6-11	1	_	_					
18	T115782000	TAPA PRINCIPAL	MAIN COVER	_	1	1					
	Q242030000	ARANDELA ABANICO A5 A.304	FAN WASHER A5 A.304	4	4	4					
	Q163030000	TUERCA EXAGONAL M5 LATON	HEXAGONAL NUT M5 BRASS	4	4	4					
19	T085714000	ELECTRODO IGNICION HCG-6-11	IGNITION ELECTRODE HCG-6-11	1	_	_					
19	T115781000	ELECTRODO IGNICION 10/11-10/21	IGNITION ELECTRODE 10/11-10/2	_	1	_					
19	T135706000	ELECTRODO IGNICION 20/11-20/21	IGNITION ELECTRODE 20/11-20/2	_	_	1					
	Q153021000	TORNILLO ALOMADO M4 X 10	CURVED SCREW M4 X 10	1	1	1					
20	T085710000	QUEMADOR FURIGAS 6-11	BURNER FURIGAS 6-11	1	_	_					
20	T115710000	QUEMADOR FURIGAS 10-11/10-21	BURNER FURIGAS 10-11/10-21	_	1	_					
20	T145712000	QUEMADOR FURIGAS 20/11	BURNER FURIGAS 20/11	_	_	1					
21	T075013000	JUNTA DE TAPA PRINCIPAL	MAIN COVER SEAL	1	_	_					
21	R725055000	JUNTA DE TAPA PRINCIPAL	MAIN COVER SEAL	_	1	1					
22	T075014000	JUNTA CAMARA COMBUST. 6/11	FUEL CHAMBER SEAL 6/11	1	_	_					
22	R725051000	JUNTA CAMARA COMBUST. 10/11	FUEL CHAMBER SEAL 10/11	_	1	_					
22	T145710000	JUNTA CAMARA COMBUST. 20/11	FUEL CHAMBER SEAL 20/11	_	_	1					

MOD.	HORNOS	ZONA	PARTE FUNCIONAL DE GAS	PLANO	C-1990

ITEM	CODIGO	DENOMINACION	TEXTO	HGC-6/11	HGC-10/11	HGC-20/11					NOTAS
23	T085713000	CAMARA COMBUS. COMP. 6-11	COMP. COMBUS. CHAMBER 6-11	1	_	_					
23	T015700000	CAMARA COMBUS. COMP. 10-11-	COMP. COMBUS. CHAMBER 10-1	_	1	_					
23	T155700000	INTERCAMBIADOR COMPLETO	COMP. HEAT EXCHANGER	_	_	1					
	Q232040000	ARANDELA A6	WASHER A6	8	8	12					
	Q262040000	ARANDELA GROW. A6 A.304	WASHER GROW. A6 A.304	8	8	12					
	Q163040000	TUERCA EXAGONAL M6 LATON	HEXAGONAL NUT M6 BRASS	8	8	12					
24	T092615000	SEPARA CENTRAL 20-11/20-21	CENTRAL SEPARATOR 20-11/20-	_	_	1					
	Q262040000	ARANDELA GROW. A6 A.304	WASHER GROW. A6 A.304	_	_	2					
	Q162040000	TUERCA EXAGONAL M6	HEXAGONAL NUT M6	_	_	2					
25	T145711000	JUNTA COLECT 20-11/20-21 GAS	COLLECTOR SEAL 20-11/20-21 G	_	_	1					

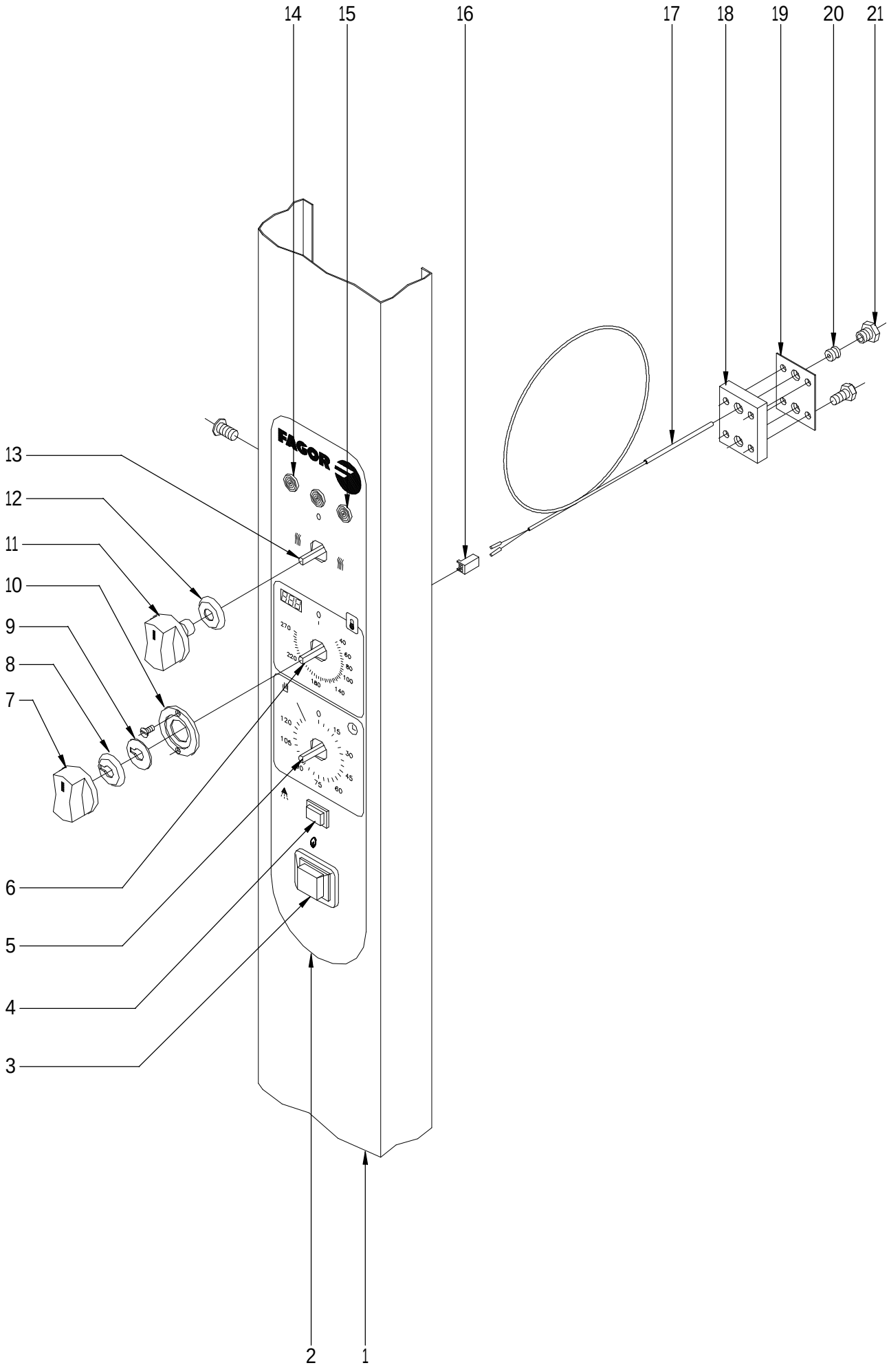

N plano	Firma	Fecha	Aparato	Lamina	
C-1991		2008-02	SISTEMA ELECTRICO PORTAMANDOS HORNO HGC-6/11; 10/11; 20/11	10	Fagor Industrial S.Coop. Oñate

MOD.	HORNOS	ZONA	PARTE ELECTRICA PORTAMANDOS	PLANO	C-1991

ITEM	CODIGO	DENOMINACION	TEXTO	HGC-6/11	HGC-10/11	HGC-20/11					NOTAS
1	T082811000	PORTAMANDOS COMP. HGC-6/11	CONTROL HOLDER HGC-6 / 11	1	_	_					
1	T012810000	PORTAMANDOS COMP. HGC-10/11	CONTROL HOLDER HGC-10 / 11	_	1	_					
1	T102817000	PORTAMANDOS COMP. HGC-20/11	CONTROL HOLDER HGC-20 / 11	_	_	1					
	Q152004000	TORNILLO APLAST. M5X13 A 304	MUSHROOM HEAD BOLT M5X13	3	3	3					
	Q221342000	REMACHE EXAGONAL M5	HEXAGONAL RIVET M5	2	2	2					
	T012803000	SOPORTE COMPONENTES HCG	COMPONENTS SUPPORT HCG	1	1	1					
2	T013047000	SERIGRAFIA HGC-611 10/11 20/11	SERIGRAPHY HGC-611 10/11 20/1	1	1	1					
3	Z213033000	PULSADOR MARCHA	START BUTTON	1	1	1					
4	R663032000	PULSADOR L41M8M959F	BUTTON L41M8M959F	1	1	1					
5	R723000000	TEMPORIZADOR MANUAL	MANUAL TIMER	1	1	1					
6	R743013000	TERMOSTATO ELECTRONICO 270ºC	ELECTRONIC THERMOSTAT 270º	1	1	1					
	R663036000	FIJACION CIRCUITO	CIRCUIT ATTACHMENT	4	4	4					
7	R663063000	BOTÓN DE MANDO COMPLETO	COMPLETE CONTROL BUTTON	1	1	1					
8	R663045000	JUNTA POTENCIOMETRO	POTENTIOMETER SEAL	1	1	1					
9	R662810000	ARANDELA GUIA	GUIDE WASHER	1	1	1					
10	R662809000	GUIA BOTON DE MANDO	CONTROL BUTTON GUIDE	1	1	1					
	Q151346000	TORNILLO AVELLANADO M3x5	COUNTERSUNK BOLT M3x5	2	2	2					
11	R663062000	BOTÓN DE MANDO COMPLETO	COMPLETE CONTROL BUTTON	2	2	2					
12	R663046000	JUNTA CONMUTADOR	SWITCH SEAL	2	2	2					
13	T013001000	CONMUTADOR FUNCIONES HCG	FUNCTIONS SWITCH HCG	1	1	1					
14	R693056000	PILOTO AMBAR 41227000A4	AMBER PILOT 41227000A4	2	2	2					
15	R693055000	PILOTO VERDE 41227000C7	GREEN PILOT 41227000C7	1	1	1					
16	R663092000	CONECTOR 2 VIAS	2-WAY CONNECTOR	1	1	1					
17	R663090000	CONJUNTO TERMOPAR	THERMOCOUPLE UNIT	1	1	1					
18	R662659000	APOYO RACORD SONDA	PROBE CONNECTION SUPPORT	1	1	1					
19	R692811000	JUNTA PASAMUROS DOBLE	DOUBLE FEEDTHROUGH GASKE	1	1	1					
20	R662652000	BICONO CIERRE SONDA	PROBE CLOSING BICONE	1	1	1					
21	R662629000	RACORD CIERRE SONDA	PROBE CLOSING CONNECTION	1	1	1					
	Q032021000	TORNILLO ALOMADO M4X10	CURVED SCREW M4X10	4	4	4					
	Q232020000	ARANDELA A-4	WASHER A-4	4	4	4					

N.plano
C-1992

Firma

Fecha
2008-02

Aparato
HORNO HGC-6/11; 10/11; 20/11

PANEL CUADRO ELECTRICO

Lamina
11

Fagor Industrial S.Coop.
Onate

FAGOR

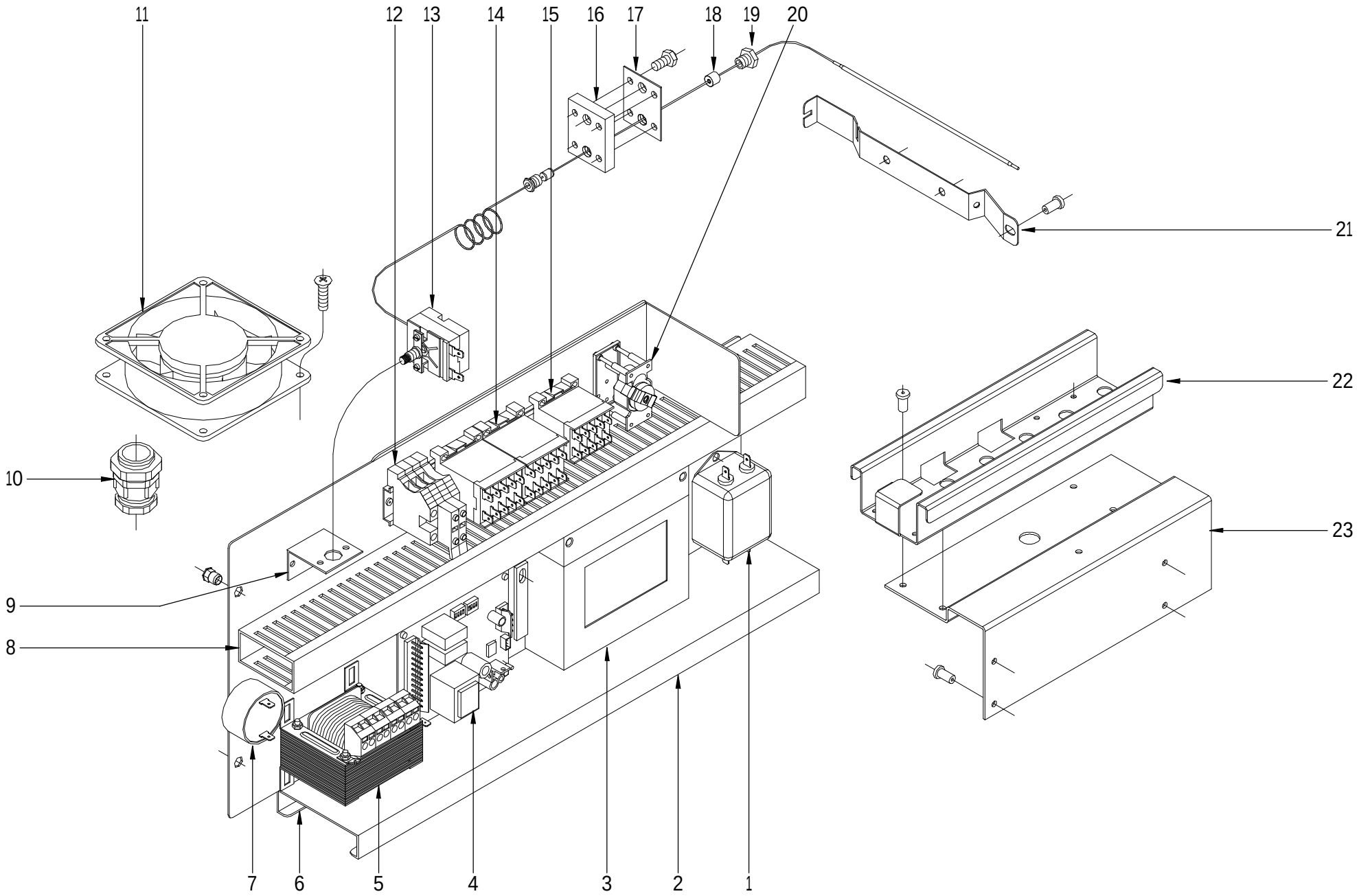

MOD.	HORNOS	ZONA	CUADRO ELECTRICO	PLANO	C-1992

ITEM	CODIGO	DENOMINACION	TEXTO	HGC-6/11	HGC-10/11	HGC-20/11					NOTAS
1	T113023000	FILTRO DE ENTRADA	INPUT FILTER	1	1	1					
2	T083003000	PANEL CUADRO HCG	CONTROL PANEL HCG	1	1	1					
	Q221342000	REMACHE EXAGONAL M5	HEXAGONAL RIVET M5	2	2	2					
3	Z953004000	CONTROL COMBUSTION	COMBUSTION CONTROL	1	1	1					
4	T303048000	VARIADOR HORNO GAS 4V	GAS 4V OVEN VARIATOR	1	1	1					
5	R503005000	TRANSFORMADOR	TRANSFORMER	1	1	1					
	Q012021000	TORNILLO EXAGONAL M4x10	HEXAGONAL BOLT M4x10	4	4	4					
	Q162020000	TUERCA EXAGONAL M4	HEXAGONAL NUT M4	4	4	4					
6	R723101000	CONTRAGUIA CUADRO HCG	SWITCHBOARD COUNTERGUIDE	1	1	1					
	Q412002000	REMACHE AVINOX Ø4x10MM	RIVET AVINOX Ø4x10MM	7	7	7					
7	R693067000	ZUMBADOR	BUZZER	1	1	1					
8	3715520000	CANALETA UNEX 60.30.77	PIPING UNEX 60.30.77	3	3	3					
9	R343039000	SOPORTE TERMOS VAPOR	STEAM THERMOSTAT SUPPORT	1	1	1					
10	R073004000	PRENSA ESTOPAS	STUFFING BOX	1	1	1					
11	Z103066000	VENTILADOR 230V.50-60HZ	FAN 230V.50-60HZ	2	2	2					
	Q081365000	TORN. ALOMADO M4,8X19 H.ZINC.	HEXAGONAL CURVED M4.8X19 H	3	3	6					
	Q908010000	BRIDA CREMALLERA	RACK FLANGE	_	_	6					
12	R073005000	BORNAS PORTA FUSIBLES	FUSE HOLDER TERMINALS	3	3	3					
	R723015000	FUSIBLE CRISTAL 10A.	GLASS FUSE 10A.	2	2	2					
	P453026000	BORNE TIERRA 10 WPE-10103.O	EARTH TERMINAL 10 WPE-10103	1	1	1					
	Z263302000	BORNA DE PASO AZUL	BLUE THROUGH TERMINAL	1	1	1					
	Z683068000	SEÑALIZ.DEK-6WEIDMULLER	SIGNS DEK-6WEIDMULLER	1	1	1					
	Z263303000	TOPE FINAL	END STOP	1	1	1					
13	R243016000	LIMITADOR TEMP	TEMP LIMITER	1	1	1					
14	Z743009000	CONTACT. SIRIUS 3RT10 16-2AP02	CONTACT. SIRIUS 3RT10 16-2AP	2	2	2					
15	Z683087000	CONTACTOR 3TF20 01-3AL2 230	CONTACTOR 3TF20 01-3AL2 230	1	1	1					
	Z403016000	GUIA CONTACTOR L-100	CONTACTOR GUIDE L-100	1	1	1					
	Q412002000	REMACHE AVINOX Ø4x10MM	RIVET AVINOX Ø4x10MM	6	6	6					
16	R662659000	APOYO RACORD SONDA	PROBE CONNECTION SUPPORT	1	1	1					
17	R692811000	JUNTA PASAMUROS DOBLE	DOUBLE FEEDTHROUGH GASKE	1	1	1					
18	R662662000	JUNTA CIERRE BULBO LIMITADOR	BULB LIMITER CLOSING SEAL	1	1	1					

MOD.	HORNOS	ZONA	CUADRO ELECTRICO	PLANO	C-1992

ITEM	CODIGO	DENOMINACION	TEXTO	HGC-6/11	HGC-10/11	HGC-20/11					NOTAS
19	R662629000	RACORD CIERRE SONDA	PROBE CLOSING CONNECTION	1	1	1					
	Q032021000	TORNILLO ALOMADO M4X10	CURVED SCREW M4X10	4	4	4					
	Q232020000	ARANDELA A-4	WASHER A-4	4	4	4					
20	R763006000	PROGRAMADOR INVERSION GIRO	INVERT ROTATION PROGRAMME	1	1	1					
21	R662683000	SOPORTE BULBO	BULB SUPPORT	1	1	1					
	Q412002000	REMACHE AVINOX Ø4x10MM	RIVET AVINOX Ø4x10MM	3	3	3					
22	R342802000	GUIA CUADRO ELECTRICO "	SWITCHBOARD GUIDE"	1	1	1					
	Q412002000	REMACHE AVINOX Ø4x10MM	RIVET AVINOX Ø4x10MM	4	4	4					
23	T083004000	PEDESTAL CUADRO ELECTRICO	SWITCHBOARD PEDESTAL	1	1	_					
23	T083041000	PEDESTAL CUADRO ELECTRICO	SWITCHBOARD PEDESTAL	_	_	1					
	Q412002000	REMACHE AVINOX Ø4x10MM	RIVET AVINOX Ø4x10MM	4	4	4					

MOD.	HORNOS	ZONA	VARIOS	PLANO	

ITEM	CODIGO	DENOMINACION	TEXTO	HGC-6/11	HGC-10/11	HGC-20/11					
	T116502000	FOLLETO DE INSTRUCCIONES	INSTRUCTION LEAFLET	1	1	1					
	T013049000	ESQUEMA TEORICO HGC-6-10/11	THEORETICAL DIAGRAM HGC-6-	1	1	_					HC-78230
	T153001000	ESQUEMA TEORICO HGC-20/11	THEORETICAL DIAGRAM HGC -2	_	_	1					HC-77666
	T013046000	ESQUEMA DE MONTAJE HGC	ASSEMBLY DIAGRAM HGC	1	1	1					HD-12792
	T113028000	LEYENDA ESQUEMA TEORICO	THEORETICAL DIAGRAM LEGEN	1	1	1					HC-75483
	T013045000	INSTALACION ELECTRICA HCG	ELECTRICAL INSTALLATION HCG	1	1	1					
	T113036000	CABLEADO VARIAD-SOP 6-10/11	VARIED WIRING-SOP 6-10/11	1	1	_					
	T133033000	CABLEADO VARIAD-SOP 20-11	VARIED WIRING-SOP 20-11	_	_	1					
	T153002000	CABLEADO INVERSION GIRO HCG	WIRING INVERT ROTATION HCG	1	1	1					
	T153003000	MONTAJE INVERSION GIRO HCG	ASSEMBLY INVERT ROTATION H	1	1	1					
	T123010000	CABLE ENCENDIDO	IGNITION CABLE	1	1	1					
	T113092000	CABLEADO LUZ INTERIOR 6-10/11	INTERIOR LIGHT WIRING 6-10/11	1	1	_					
	T113093000	CABLEADO LUZ INTERIOR 20/11	INTERIOR LIGHT WIRING 20/11	_	_	1					
	T133001000	CABLEADO CONEX. 2 MOTORES	CONNECT. WIRING 2 MOTOR	_	_	1					

MOD.	HORNOS	ZONA	PIEZAS ESPECIFICAS PARA LOS DISTINTOS GASES Y DIFERENTES FRECUENCIAS	PLANO	

ITEM	CODIGO	DENOMINACION	TEXTO	HGC-6/11	HGC-10/11	HGC-20/11					
		BUTANO PROPANO 50 HZ	**BUTANE PROPANE 50 HZ**								
1	T085010000	VALVULA REGUL. 6/11 BP 50 HZ	CONTROL VALVE 6/11 BP 50 HZ	1	_	_					C-1990
1	T115097000	VALVULA REGUL. 10/11 BP 50 HZ	CONTROL VALVE 10/11 BP 50 HZ	_	1	_					C-1990
1	T135037000	VALVULA REGUL. 20/11 BP 50 HZ	CONTROL VALVE 20/11 BP 50 HZ	_	_	1					C-1990
12	T085018000	ARANDELA Ø 14 BP y GN	WASHER Ø 14 BP y GN	1	_	_					C-1990
12	T115082000	ARANDELA Ø 18 BP	WASHER Ø 18 BP	_	1	_					C-1990
12	T135035000	ARANDELA Ø 22 BP	WASHER Ø 22 BP	_	_	1					C-1990
		BUTANO PROPANO 60 HZ	**BUTANE PROPANE 60 HZ**								
S/Nº	T322607000	REDUCC. CUBREVENTOR 60Hz	FAN COVER REDUC. 60 Hz.	_	1	_					C-1985
12	T322607000	REDUCC. CUBREVENTOR 60Hz	FAN COVER REDUC. 60 Hz.	_	_	2					C-1986
1	T085016000	VALVULA REGUL. 6/11 BP 60 HZ	CONTROL VALVE 6/11 BP 60 HZ	1	_	_					C-1990
1	T115100000	VALVULA REGUL. 10/11 BP 60 HZ	CONTROL VALVE 10/11 BP 60 HZ	_	1	_					C-1990
1	T135040000	VALVULA REGUL. 20/11 BP 60 HZ	CONTROL VALVE 20/11 BP 60 HZ	_	_	1					C-1990
12	T085018000	ARANDELA Ø 14 BP y GN	WASHER Ø 14 BP y GN	1	_	_					C-1990
12	T115082000	ARANDELA Ø 18 BP	WASHER Ø 18 BP	_	1	_					C-1990
12	T135035000	ARANDELA Ø 22 BP	WASHER Ø 22 BP	_	_	1					C-1990
		GAS NATURAL 50 HZ	**NATURAL GAS 50 HZ**								
1	T085011000	VALVULA REGUL. 6/11 GN 50 HZ	CONTROL VALVE 6/11 GN 50 HZ	1	_	_					C-1990
1	T115098000	VALVULA REGUL. 10/11 GN 50 HZ	CONTROL VALVE 10/11 GN 50 HZ	_	1	_					C-1990
1	T135039000	VALVULA REGUL. 20/11 GN 50 HZ	CONTROL VALVE 20/11 GN 50 HZ	_	_	1					C-1990
12	T085018000	ARANDELA Ø 14 BP y GN	WASHER Ø 14 BP y GN	1	_	_					C-1990
12	T115083000	ARANDELA Ø 20 GN	WASHER Ø 20 GN	_	1	_					C-1990
12	T135036000	ARANDELA Ø 26.3 GN	WASHER Ø 26.3 GN	_	_	1					C-1990

MOD.	HORNOS	ZONA	PIEZAS ESPECIFICAS PARA LOS DISTINTOS GASES Y DIFERENTES FRECUENCIAS	PLANO	

ITEM	CODIGO	DENOMINACION	TEXTO	HGC-6/11	HGC-10/11	HGC-20/11					
		GAS NATURAL 60 HZ	**NATURAL GAS 60 HZ**								
S/Nº	T322607000	REDUCC. CUBREVENTOR 60Hz	FAN COVER REDUC. 60 Hz.	_	1	_					C-1985
12	T322607000	REDUCC. CUBREVENTOR 60Hz	FAN COVER REDUC. 60 Hz.	_	_	2					C-1986
1	T085017000	VALVULA REGUL. 6/11 GN 60 HZ	CONTROL VALVE 6/11 GN 60 HZ	1	_	_					C-1990
1	T115101000	VALVULA REGUL. 10/11 GN 60 HZ	CONTROL VALVE 10/11 GN 60 HZ	_	1	_					C-1990
1	T135041000	VALVULA REGUL. 20/11 GN 60 HZ	CONTROL VALVE 20/11 GN 60 HZ	_	_	1					C-1990
12	T085018000	ARANDELA Ø 14 BP y GN	WASHER Ø 14 BP y GN	1	_	_					C-1990
12	T115083000	ARANDELA Ø 20 GN	WASHER Ø 20 GN	_	1	_					C-1990
12	T135036000	ARANDELA Ø 26.3 GN	WASHER Ø 26.3 GN	_	_	1					C-1990

MOD.	HORNOS	ZONA	PIEZAS ESPECIFICAS PARA VAUBAN	PLANO	C-1982

ITEM	CODIGO	DENOMINACION	TEXTO	VCG-6/11	VCG-10/11	VCG-20/11					
		PIEZAS A ELIMINAR	**PARTS TO BE REMOVED**								
6	T013047000	SERIGRAFIA HGC-611 10/11 20/11	SERIGRAPHY HGC-611 10/11 20/	1	1	1					
	T116502000	FOLLETO DE INSTRUCCIONES	INSTRUCTION LEAFLET	1	1	1					
		PIEZAS A INTRODUCIR	**PARTS TO BE INCLUDED**								
6	T013048000	SERIGRAFIA VAUBAN VCG-10/11	SERIGRAPHY VAUBAN VCG-10/1	1	1	1					
	T116520000	FOLLETO DE INSTRUCCIONES	INSTRUCTION LEAFLET	1	1	1					

HGC - 10 / 11 HGC - 6 / 11

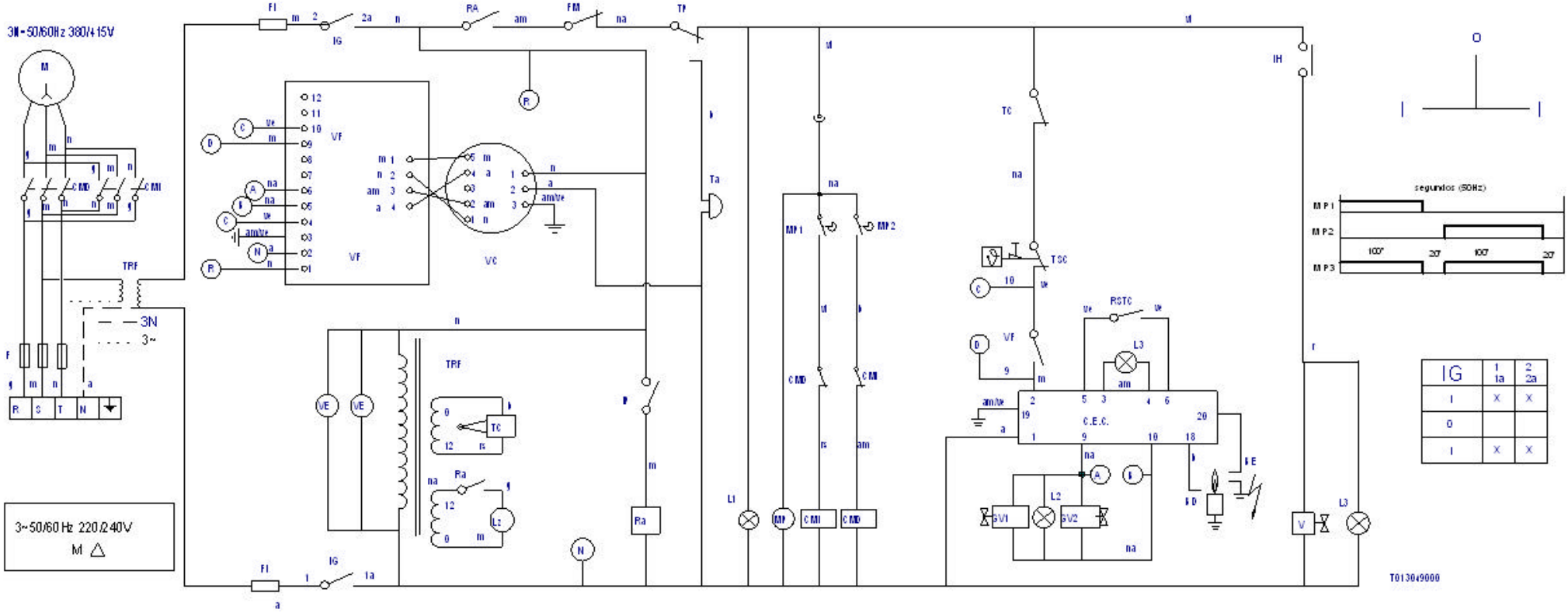

IG	1 1a	2 2a
I	X	X
0		
I	X	X

	ESQUEMA TEORICO ADHESIVO HCG		T013049000		
Nº	Pieza	Material	Nº Clasificacion	Acabado	
Nº	Modificacion	Propuesta de	Fecha	Tolerancias generales	
				<5±	50-100± :
				5-25± :	>100±
				25-50± :	○/±

	Firma	Fecha
Dibujado	M.Mallio	19-09-2005
Proyectado	M.Mallio	19-09-2005
Comprobado		22-09-2005
Escala		

FAGOR

Fagor Industrial,Koop.Elk, Mugatua

Mecanizado superficial

HORNOS HCG

Plano numero HC-78230

Sustituye al Nº

Sustituido por

HCG - 20/21 HCG - 20/11

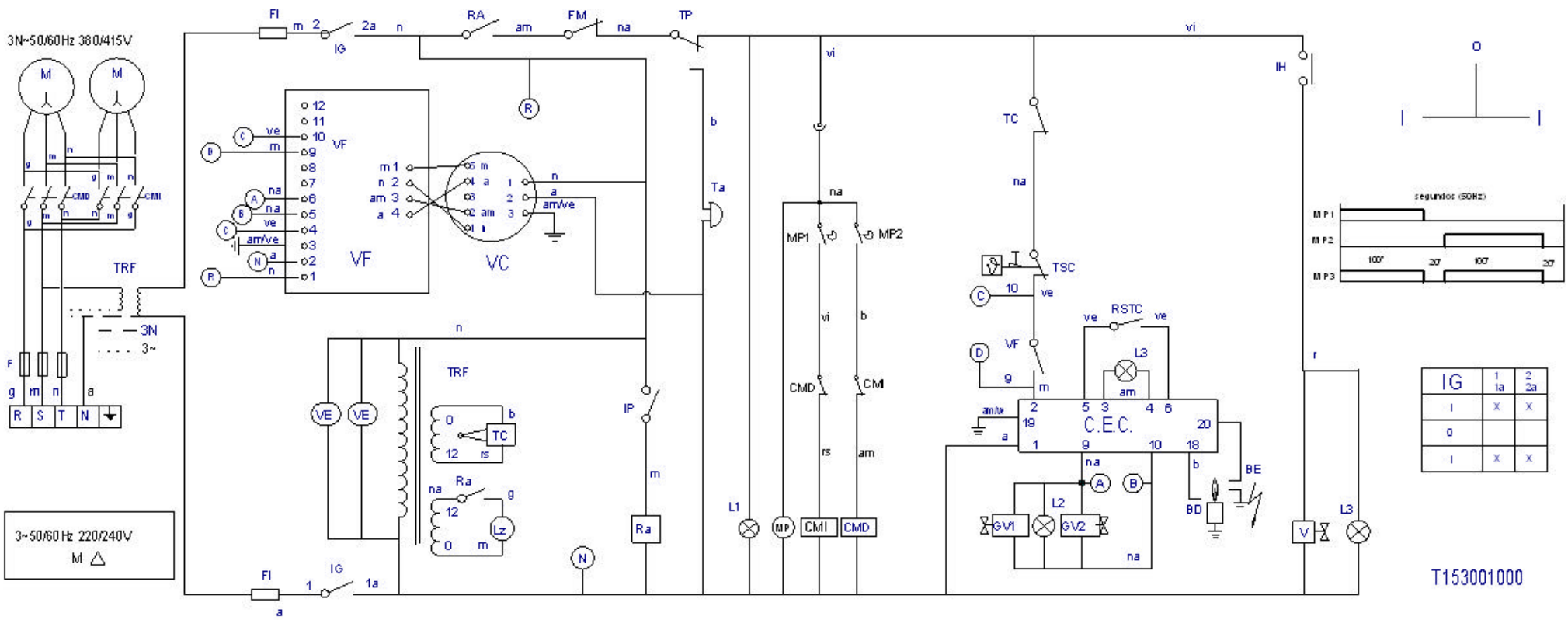

IG	1 1a	2 2a
1	X	X
0		
1	X	X

	ESQUEMA TEORICO ADHESIVO HCG		T153001000		
Nº	Pieza	Material	Nº Clasificacion	Acabado	
Nº	Modificacion	Propuesta de	Fecha	Tolerancias generales	
				<5±	50-100± :
				5 -25± :	>100±
				25 -50± :	◇±

	Firma	Fecha
Dibujado	M.Mallio	19-10-2004
Proyectado	M.Mallio	19-10-2004
Comprobado		22-10-2004
Escala		

FAGOR

Fagor Industrial, Koop. Elk., Mugatua

Mecanizado superficial

HORNOS HCG

Plano numero HC-77666

Sustituye al Nº

Sustituido por

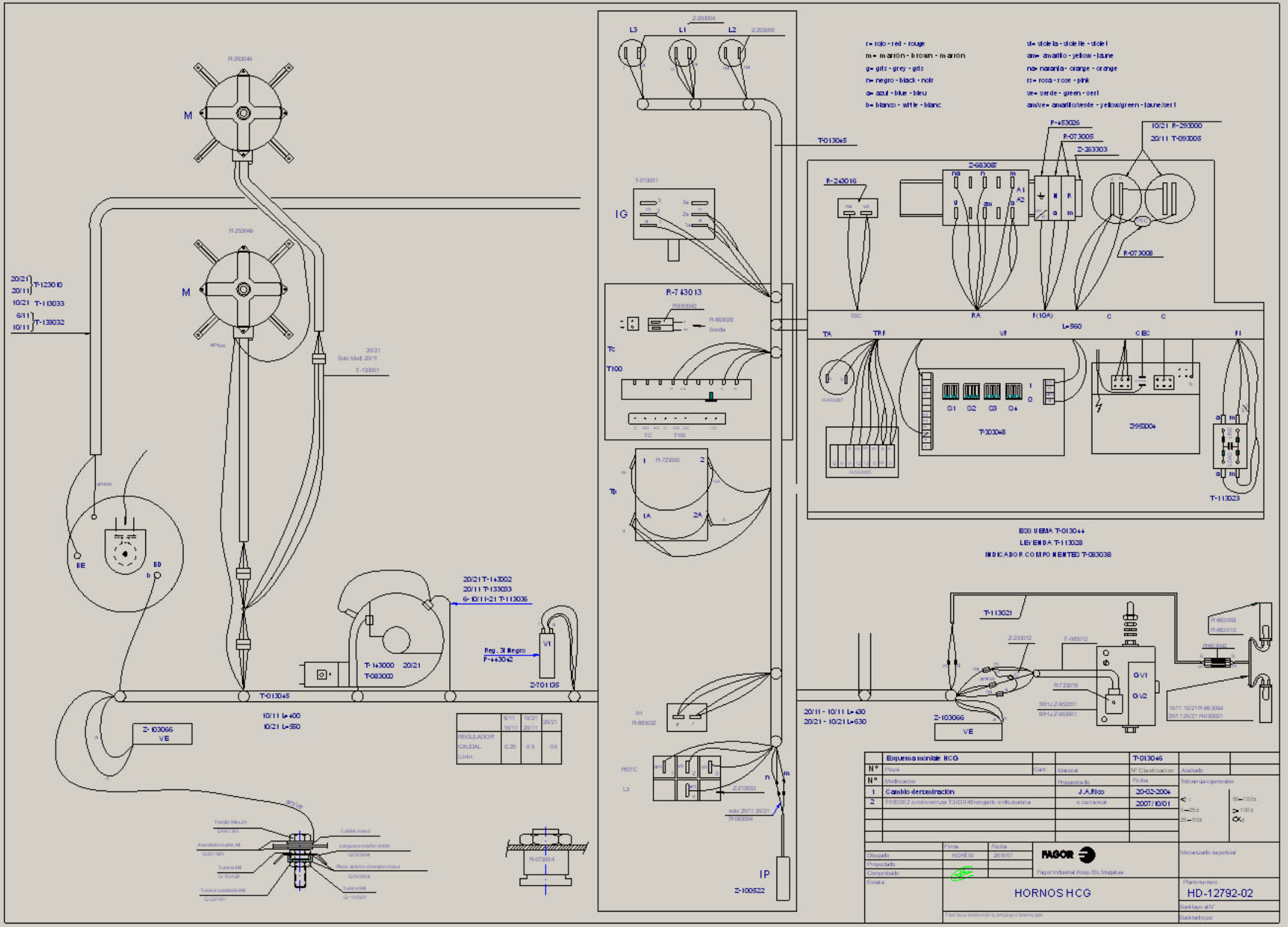
r= rojo - red - rouge
m= marrón - brown - marrón
g= gris - grey - gris
n= negro - black - noir
a= azul - blue - bleu
b= blanco - white - blanc
vi= violeta - violette - violet
am= amarillo - yellow - jaune
na= naranja - orange - orange
rs= rosa - rose - pink
ve= verde - green - vert
am/ve= amarillo/verde - yellow/green - jaune/vert
T-013045
IG
R-743013
T100
Tc
Tp
IH
RSTC
L3
IP
Z-100522
R-243016
R-073005
Z-263303
Z-683087
R-073008
T-303048
Z-953004
T-113023
ESQUEMA T-013044
LEYENDA T-113028
INDICADOR COMPONENTES T-083038
T-113021
Z-103066
VE
GV1
GV2
20/11 - 10/11 L=430
20/21 - 10/21 L=630
T-143000 20/21
T-083000
Reg. 3l Negro
P-443042
Z-701135
T-013045
10/11 L=400
10/21 L=550
REGULADOR CAUDAL L/min
0.25
0.5
0.8
Esquema montaje HCG
T-013046
Cambio denominación
J.A.Rico
20-02-2004
HORNOS HCG
HD-12792-02
FAGOR

ESPAÑOL

CODIGO DE COLORES:

r = rojo
a = azul
m = marron
g = gris
n = negro
b = blanco
vi = violeta
am = amarillo
na = naranja
rs = rosa
ve = verde
am/ve = amarillo verde

COMPONENTES:

BD = Bujia de detector de llama
BE = Bujia de Encendido
C = Condensador Motor
C.E.C. = Control Encendido cámara
C.E.V. = Control encendido vapor
CN = Control nivel de agua
○ F, F1, F2, F3 = Fusible
FI = Filtro interferencias
FM = Térmico Motor
GV1 = Electroválvula de gas cámara (Control)
GV2 = Electroválvula de gas cámara (Seguridad)
GV4 = Electroválvula de gas vapor (Control)
GV5 = Electroválvula de gas vapor (Seguridad)
Ia = Micro chimenea abierta
Ic = Micro chimenea cerrada
IG = Interruptor general
IP = Interruptor puerta
IR = Selector regulador sonda núcleo
L1 = Lámpara de funcionamiento
L2 = Lámpara calentamiento cámara
L4 = Lámpara entrada de vapor
L3 = Lámpara indicador de bloqueo cámara
L5 = Lámpara indicador de bloqueo vapor
L6 = Lámpara seguridad de vapor
L7 = Lámpara detección de cal
Lz = Luz interior cámara
M = Motor
M1 = Motor accionamiento chimenea
R2, R1, Ra = Relé Auxiliar
RE1 = Regulador de energía
RSTC = Pulsador de rearme cámara
RSTV = Pulsador de rearme vapor
RTS = Regulador sonda núcleo
T100 = Termostato fijo 100°C
Ta = Timbre avisador
TC = Termostato cámara
TCN = Termostato condensación
TDC = Termostato detección de cal
○ TP, TMP = Temporizador
○ TRF, TRF1 = Transformador
TSC = Termostato seguridad cámara
TSV = Termostato seguridad de vapor
TV = Termostato de vapor
VI = Electroválvula de agua de llenado
VC = Ventilador centrífugo premezcla
VCN = Electroválvula de agua de condensación
VE = Ventilador cuadro eléctrico
VF = Variador de frecuencia

FRANÇAIS

CODES DE COULEURS:

r = rouge
a = bleu
m = marron
g = gris
n = noir
b = blanc
vi = violet
am = jaune
na = orange
rs = rose
ve = vert
am/ve = jaune/vert

COMPOSANTS:

BD = Veilleuse de détection de flamme
BE = Veilleuse d'allumage
C = Condensateur moteur
C.E.C. = Controle d'allumage de chambre
C.E.V. = Controle d'allumage de vapeur
CN = Controle du niveau d'eau
○ F, F1, F2, F3 = Fusible
FI = Filtre interférences
FM = Moteur thermique
GV1 = Electrovalve de chambre gaz (controle)
GV2 = Electrovalve de chambre gaz (sécurité)
GV4 = Electrovalve de vapeur gaz (controle)
GV5 = Electrovalve de vapeur gaz (sécurité)
Ia = Micro cheminée ouverte
Ic = Micro cheminée fermée
IG = Interrupteur general
IP = Interrupteur de porte
IR = Sélecteur régulateur de sonde noyau
L1 = Lampe de fonctionnement
L2 = Lampe de chauffe chambre
L4 = Lampe d'arrivée de vapeur
L3 = Lampe témoin de blocage de chambre
L5 = Lampe témoin de blocage de vapeur
L6 = Lampe de sureté de vapeur
L7 = Lampe de détection de calcaire
Lz = Lumière intérieure de chambre
M = Moteur
M1 = Actionnement moteur de cheminée
R2, R1, Ra = Relais auxiliaire
RE1 = Régulateur d'énergie
RSTC = Bouton de réarmement de chambre
RSTV = Bouton de réarmement de vapeur
RTS = Régulateur de sonde noyau
T100 = Thermostat fixe 100°C
Ta = Sonnerie d'alarme
TC = Thermostat de chambre
TCN = Thermostat de condensation
TDC = Thermostat de détection de calcaire
○ TP, TMP = Temporisateur 0-120
○ TRF, TRF1 = Transformador
TSC = Thermostat de sureté de chambre
TSV = Thermostat de sureté de vapeur
TV = Thermostat de vapeur
VI = Electrovalve de remplissage d'eau
VC = Ventilateur de centrifugeuse de prémélange
VCN = Electrovalve de condensation d'eau
VE = Ventilateur tableau electrique
VF = Variador de frecuencia

ENGLISH

COLOUR CODE

r = red
a = blue
m = brown
g = grey
n = black
b = white
vi = violet
am = yellow
na = orange
rs = pink
ve = green
am/ve = yellow-green

COMPONENTS:

BD = Flame detector spark plug
BE = Ignition spark plug
C = Motor condenser
C.E.C. = Cooking chamber ignition control
C.E.V. = Steam ignition control
CN = Water level control
○ F, F1, F2, F3 = Fusible
FI = Interference filter
FM = Motor thermal switch
Cooking chamber gas solenoid valve (control)
GV2 = Cooking chamber gas solenoid valve (safety)
GV4 = Steam gas solenoid valve (control)
GV5 = Steam gas solenoid valve (safety)
Ia = Chimney open microswitch
Ic = Chimney closed microswitch
IG = Interruptor general
IP = Door switch
IR = Core probe regulator selector
L1 = On/off lamp
L2 = Cooking chamber heating lamp
L4 = Steam inlet lamp
L3 = Cooking chamber lock indicator lamp
L5 = Steam lock indicator lamp
L6 = Steam safety lamp
L7 = Lime detection lamp
Lz = Cooking chamber interior lamp
M = Motor
M1 = Chimney drive motor
R2, R1, Ra = Ausiliary relay
RE1 = Energy regulator
RSTC = Cooking chamber reset button
RSTV = Steam reset button
RTS = Core probe regulator
T100 = Fixed 100°C thermostat
Ta = Warning buzzer
TC = Cooking chamber thermostat
TCN = Condensation thermostat
TDC = Lime detection thermostat
○ TP, TMP = 0-120 timer
○ TRF, TRF1 = Transformer
TSC = Cooking chamber safety thermostat
TSV = Steam safety thermostat
TV = Steam thermostat
VI = Water filling solenoid valve
VC = Pre-mix centrifuge fan
VCN = Condensation water solenoid valve
VE = Switchboard fan
VF = Frequency inverter

DEUTSCH

FARBENCODE

r = rot
a = blau
m = braun
g = grau
n = schwarz
b = weiss
vi = violett
am = gelb
na = orangers
rs = rosa
ve = grün
am/ve = gelb/grün

KOMPONENTEN:

BD = Zündkerze des Flammendetektors
BE = Zündkerze der Zündung
C = Motorkondensator
C.E.C. = Zündkontrolle Kammer
C.E.V. = Zündkontrolle Dampf
CN = Kontrolle Wasserstand
○ F, F1, F2, F3 = Fusible
FI = Interferenzefilter
FM = Thermomoter
GV1 = Electroventil Gas, Kammer (Kontrolle)
GV2 = Electroventil Gas, kammer (Sicherheit)
GV4 = Electroventil Gas, Dampf (Kontrolle)
GV5 = Electroventil Gas, Dampf (Sicherheit)
Ia = Mikroschacht geoffnet
Ic = Mikroschacht geschlossen
IG = Hauptschalter
IP = Turschalter
IR = Wahlregler Kernsonde
L1 = Funktionsleuchtanzeige
L2 = Erwarmungsleuchtanzeige Kammer
L4 = Leuchtanzeige Dampfeintritt
L3 = Leuchtanzeige Blockierung Kammer
L5 = Leuchtanzeige Blockierung Dampf
L6 = Sicherheitsleuchtanzeige Dampf
L7 = Kalkanzeige
Lz = Innenbeleuchtung Kammer
M = Motor
M1 = Motorantrieb Mikroschacht
R2, R1, Ra = Relé Auxiliar
RE1 = Hilfsrelais
RSTC = Bedienungstaste Durch, Aufladung Kammer
RSTV = Bedienungstaste Durch, Aufladung Dampf
RTS = Kernsondenregler
T100 = Thermostat auf 100°C
Ta = Meldeklingel/Lautwerk
TC = Thermostat Kammer
TCN = Kondensationsthermostat
TDC = Thermostat Kalkanzeige
○ TP, TMP = Zeitschalter 0-120
○ TRF, TRF1 = Transformator
TSC = Sicherheitsthermostat Kammer
TSV = Sicherheitsthermostat Dampf
TV = Dampfthermostat
VI = Elektroventil Wasserfullung
VC = Zentrifugalluter Vormischung
VCN = Elektroventil Kondenswasser
VE = Schaltafelventilator
VF = Frequenzwandler

ITALIANO

CODICE DEI COLORI:

r = rosso
a = azzurro
m = marrone
g = grigio
n = nero
b = bianco
vi = viola
am = giallo
na = arancione
rs = rosa
ve = verde
am/ve = giallo/verde

COMPONENTI:

BD = Candela del rilevatore di fiamma
BE = Candela d'accensione
C = Condensatore motore
C.E.C. = Controllo accensione cabina
C.E.V. = Controllo accensione vapore
CN = Controllo livello d'acqua
○ F, F1, F2, F3 = Fusibile
FI = Filtro interferenze
FM = Termico Motore
GV1 = Elettrovalvola gas cabina (controllo)
GV2 = Elettrovalvola gas cabina (sicurezza)
GV4 = Elettrovalvola gas vapore (controllo)
GV5 = Elettrovalvola gas vapore (Sicurezza)
Ia = Micro camino aperto
Ic = Micro camino chiuso
IG = Interruttore generale
IP = Interruttore porta
IR = Selettore regolatore sonda nucleo
L1 = Lampadina di funzionamento
L2 = Lampadina riscaldamento cabina
L4 = Lampadina ingreso vapore
L3 = Lampadina indicatore di blocco cabina
L5 = Lampadina indicatore di blocco vapore
L6 = Lampadina di sicurezza vapore
L7 = Lampadina rilevatore di calcare
Lz = Luce interna cabina
M = Motore
M1 = Motore funzionamento carrino
R2, R1, Ra = Relais ausiliario
RE1 = Regolatore d'energía
RSTC = Pulsante di riarmo vapore
RSTV = Regolatore sonda nucleo
RTS = Regulador Sonda Nucleo
T100 = Termostato fisso 100°C
Ta = Campanello avvisatore
TC = Termostato cabina
TCN = Termostato condensazione
TDC = Termostato rilevatore di calcare
○ TP, TMP = Timer 0-120
○ TRF, TRF1 = Transformador
TSC = Termostato sicurezza cabina
TSV = Termostato sicurezza vaspore
TV = Termostato vapore
VI = Elettrovalvola acqua di riempimento
VC = Ventilatore centrifuga
VCN = Elettrovalvola acqua di condensazione
VE = Ventilatore quadro elettrico
VF = Variatore di frequenza

T-113028

HC-75483 -01