SIMAG

SDN 45
SDN 65

R 134 A VERSION

SPARE PARTS LIST
CATALOGO RICAMBI
CATALOGUE PIÈCES DÉTACHÉES
ERSATZTEILENKATALOG

REV. 04/2016

PAGE PAGINA PAGE SEITE	TABLE OF CONTENTS	INDICE	TABLE DES MATIERES	INHALTVERZEICHNIS
1	TABLE OF CONTENTS	INDICE	TABLE DES MATIERES	INHALTVERZEICHNIS
2/3	UNIT PANELS	ASSIEME MOBILE	ENS. CAROSSERIE	MACHINE GEHAUSE
4/5	REFRIGERANT SYSTEM AIR COOLED	SISTEMA REFRIGERANTE RAFFR. AD ARIA	CIRCUIT FRIGORIFIQUE REFROID. A AIR	GEFRIERSYSTEM LUFTGEKUEHLT
6/7	REFRIGERANT SYSTEM WATER COOLED	SISTEMA REFRIGERANTE RAFFR. AD ACQUA	CIRCUIT FRIGORIFIQUE REFROID. A EAU	GEFRIERSYSTEM WASSERGEKUEHLT
8/9	WATER SYSTEM	CIRCUITO IDRAULICO	CIRCUIT HYDRAULIQUE	WASSER SYSTEM
10/11	CONTROL BOX	SCATOLA DI CONTROLLO	BOITE ELECTRIQUE	SCHALTSCHRANK
12	COMPRESSOR AND ELECTRIC COMPONENT CHARTS	TABELLA COMPRESSORI E COMPONENTI ELETTRICI	LISTE DES COMPRESSEURS ET COMPOSANTS ELECTRIQUE	KOMPRESSOR UND ELEKTRISCHER TEILLISTE

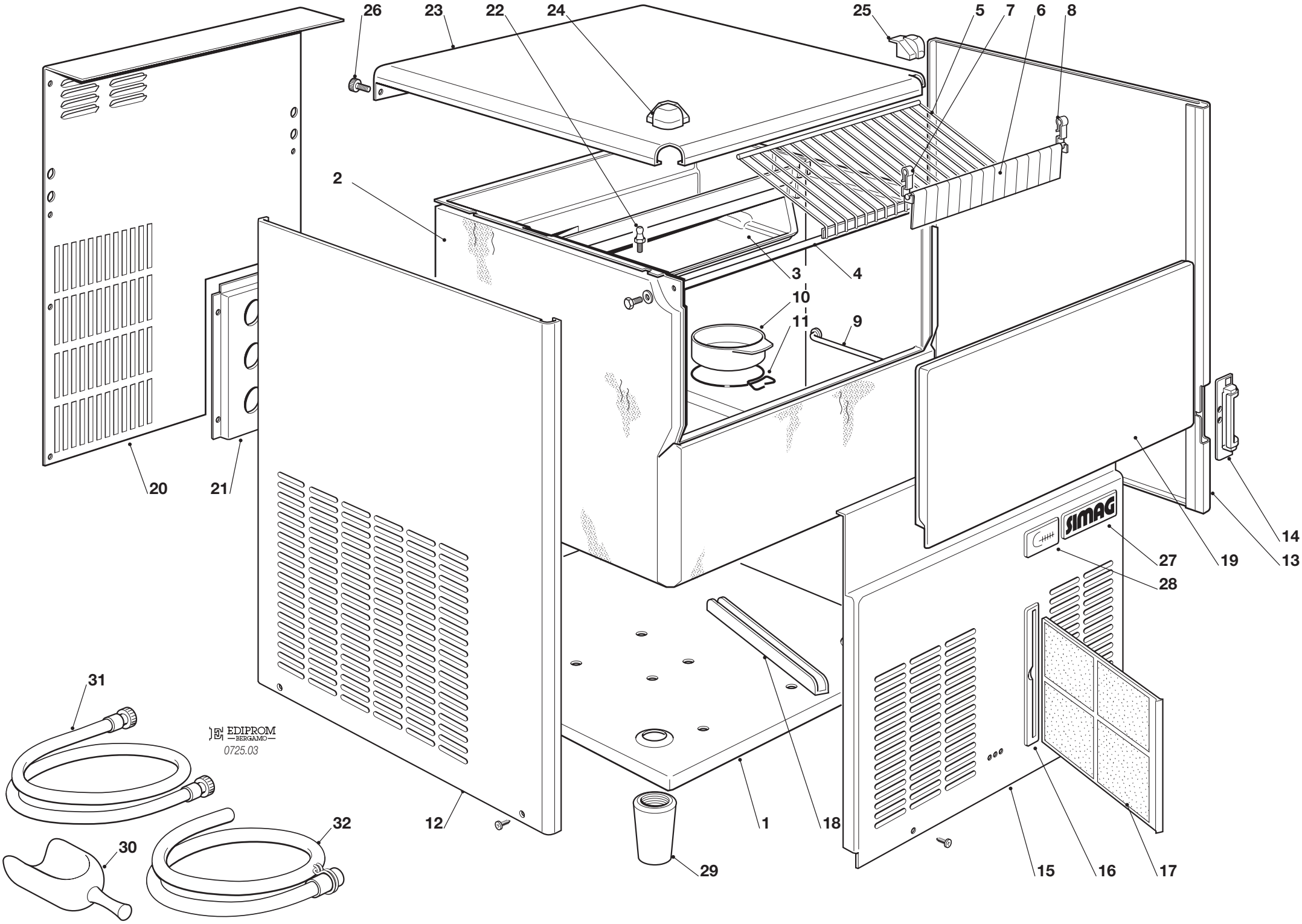
26
23
22
24
25
5
7
6
8
2
3
4
10
11
9
20
21
14
19
13
27
28
SIMAG
31
EDIPROM
BERGAMO
0725.03
32
30
12
1
18
29
15
16
17

SDN 45- SDN 65 -UNIT PANELS - ASSIEME MOBILE - ENS. CARROSSERIE - MACHINE GEHAUSE-

ITEM NO POS NO REP. NO REF. NO	PART NO - CODICE REFERENCE - STUECK NR.	DESCRIPTION	DESCRIZIONE	DESIGNATION	BESCHREIBUNG
1	702510 00	BASE	PIASTRINA DI BASE	PLAQUE DE BASE	GRUNDPLATTE
2	782094 05R 782094 06R	INSULATED BIN ASSY SDN 45 INSULATED BIN ASSY SDN 65	ASSIEME CELLA ISOLATA SDN 45 ASSIEME CELLA ISOLATA SDN 65	ENS. CABINE SDN 45 ENS. CABINE SDN 65	ISOLIEREISSPEICHER SDN 45 ISOLIEREISSPEICHER SDN 65
3	660635 04	EVAPORAT. HOUSING	INVOLUCRO EVAPORAT.	CHAMBRE INTERIEUR	CELLE INTERN
4	732016 08	BIN DOOR BRACKET	ASTA PORTELLO	TIGE PORTE	KLAPPENACHSE
5	650714 00	ICE DEFLECTOR	GRIGLIA SCORRIMENTO CUBETTI	GRILLE GLISSEMENT GLAÇON	ABGLEITGRILL
6	783172 00R	CURTAIN ASSY	ASSIEME TENDINA	ENS. LAMELLE	ABDECKKLAPPE GESAMTHEIT
7	660388 00	LEFT CURTAIN SUPPORT	SUPP. TENDINA SINISTRO	SUPP. LAMELLE GAUCHE	LINKE ABDECKLAPPE HALTERUNG
8	660388 01	RIGHT CURTAIN SUPPORT	SUPP. TENDINA DESTRO	SUPP. LAMELLE DROITE	RECHTE ABDECKLAPPE HALTER.
9	732017 02	BULB HOLDER	TUBO PORTABULBO	TUBE PORTEBULBE	FUEHLERHALTER
10	660741 00	PLASTIC PLUG	TAPPO INVOLUCRO EVAPORAT.	BOUCHON EN PLASTIQUE	PLASTIKSTOPFEN
11	460047 01	SPRING	MOLLA	RESSORT	FEDER
12	722307 00 722311 00	LEFT PANEL SDN 45 LEFT PANEL SDN 65	PAN.LO LAT. SX SDN 45 PAN.LO LAT. SX SDN 65	JOUE GAUCHE SDN 45 JOUE GAUCHE SDN 65	LINKE ABDECKL. HALTER. SDN 45 LINKE ABDECKL. HALTER. SDN 65
13	722306 00 722310 00	RIGHT PANEL SDN 45 RIGHT PANEL SDN 65	PAN.LO LAT. DX SDN 45 PAN.LO LAT. DX SDN 65	JOUE DROITE SDN 45 JOUE DROITE SDN 65	RECHTEGEHÄUS. EDELST. SDN 45 RECHTEGEHÄUS. EDELST. SDN 65
14	660883 00	FRONT SWITCH PLASTIC PROT	CARTER PROTEZIONE INTERRUT	CARTER PROTECTION INTERRUPT	SCHALTERABDECKUNG
15	722309 00 722309 01 722312 00 722312 01	FRONT PANEL AIR SDN 45 FRONT PANEL WATER SDN 45 FRONT PANEL AIR SDN 65 FRONT PANEL WATER SDN 65	PAN.LO ANT. ARI A SDN 45 PAN.LO ANT. ACQUA SDN 45 PAN.LO ANT. ARI A SDN 65 PAN.LO ANT. ACQUA SDN 65	PAN.AU AVANT . AIR SDN 45 PAN.AU AVANT . EAU SDN 45 PAN.AU AVANT . AIR SDN 65 PAN.AU AVANT . EAU SDN 65	VOR.WAND ED.T. LUFT SDN 45 VOR.WAND ED.T. WASS. SDN 45 VOR.WAND ED.T. LUFT SDN 65 VOR.WAND ED.T. WASS. SDN 65
16	660889 00 660889 01	AIR FILTER SEAT SDN 45 AIR FILTER SEAT SDN 65	SEDE FILTRO ARIA SDN 45 SEDE FILTRO ARIA SDN 65	SIEGE FILTRE A AIR SDN 45 SIEGE FILTRE A AIR SDN 65	LUFTFILTERHALTER SDN 45 LUFTFILTERHALTER SDN 65
17	660888 00 660888 01	AIR FILTER SDN 45 AIR FILTER SDN 65	FILTRO ARIA SDN 45 FILTRO ARIA SDN 65	FILTRE A AIR SDN 45 FILTRE A AIR SDN 65	LUFT FILTIER SDN 45 LUFT FILTIER SDN 65
18	660887 00	SLIDE, AIR FILTER	GUIDA FILTRO ARIA	GLISSIERE FILTRE A AIR	FUHRUNF FUR LUFTFILTIER
19	782092 06R	BIN DOOR	SPORTELLO	PORTE CABINE	SPEICHERTUER
20	702324 00 702325 00	REAR PANEL SDN 45 REAR PANEL SDN 65	PANNELLO POSTERIORE SDN 45 PANNELLO POSTERIORE SDN 65	PANNEAU POSTERIEUR SDN 45 PANNEAU POSTERIEUR SDN 65	HINTERE ABDECKUNG SDN 45 HINTERE ABDECKUNG SDN 65
21	702301 00	METAL BRACKET FOR FITTING	SUPPORTO ATTACCHI	SUPPORT DE RACCORDS	METALLTRÄGER
22	650790 00	STUD	PERNO	AXE	STIFT
23	722308 00	TOP PANEL	PANNELLO SUPER. INOX	ENS. COUVERCLE	DECKEL GESAMTHEIT
24	660884 03	LEFT TOP CAP	TAPPO IN PLASTICA SINISTRO	CAPUCHON EN PLAST. GAUCHE	PLASTIK PROFEN LINK
25	660884 02	RIGHT TOP CAP	TAPPO IN PLASTICA DESTRO	CAPUCHON EN PLAST. DROITE	PLASTIK PROFEN RECHT
26	650806 00	REAR STUD	PERNO POSTERIORE	AXE ARRIÉRE	TRÄGEN - HINTEN
27	650976 00	SIMAG LOGO	TARGHETTA SIMAG	EMBLEME SIMAG	SIMAG ABGEBILDET
28	650975 05 650975 06	SDN 45 LABEL SDN 65 LABEL	TARGHETTA SDN 45 TARGHETTA SDN 65	EMBLEME SDN 45 EMBLEME SDN 65	SDN 45 ABGEBILDET SDN 65 ABGEBILDET
29	651469 00	LEG	PIEDE REGOLABILE	PIED RÉGLABE	GERÄTEFUSS
30	650071 00	ICE SCOOP	SESSOLA	SASSE	EISSCHAUFEL
31	060513 00	KIT WATER SUPPLY PIPE	KIT TUBO ALIM. ACQUA	KIT TUYAU D'ALIM. EAU	WASSER ANSCHLUSSCHLAUCH
32	060513 01	KIT WATER DRAIN PIPE	KIT TUBO SCARICO ACQUA	KIT TUYAU VIDANGE EAU	WASSER SLAUFSCHLAUCH

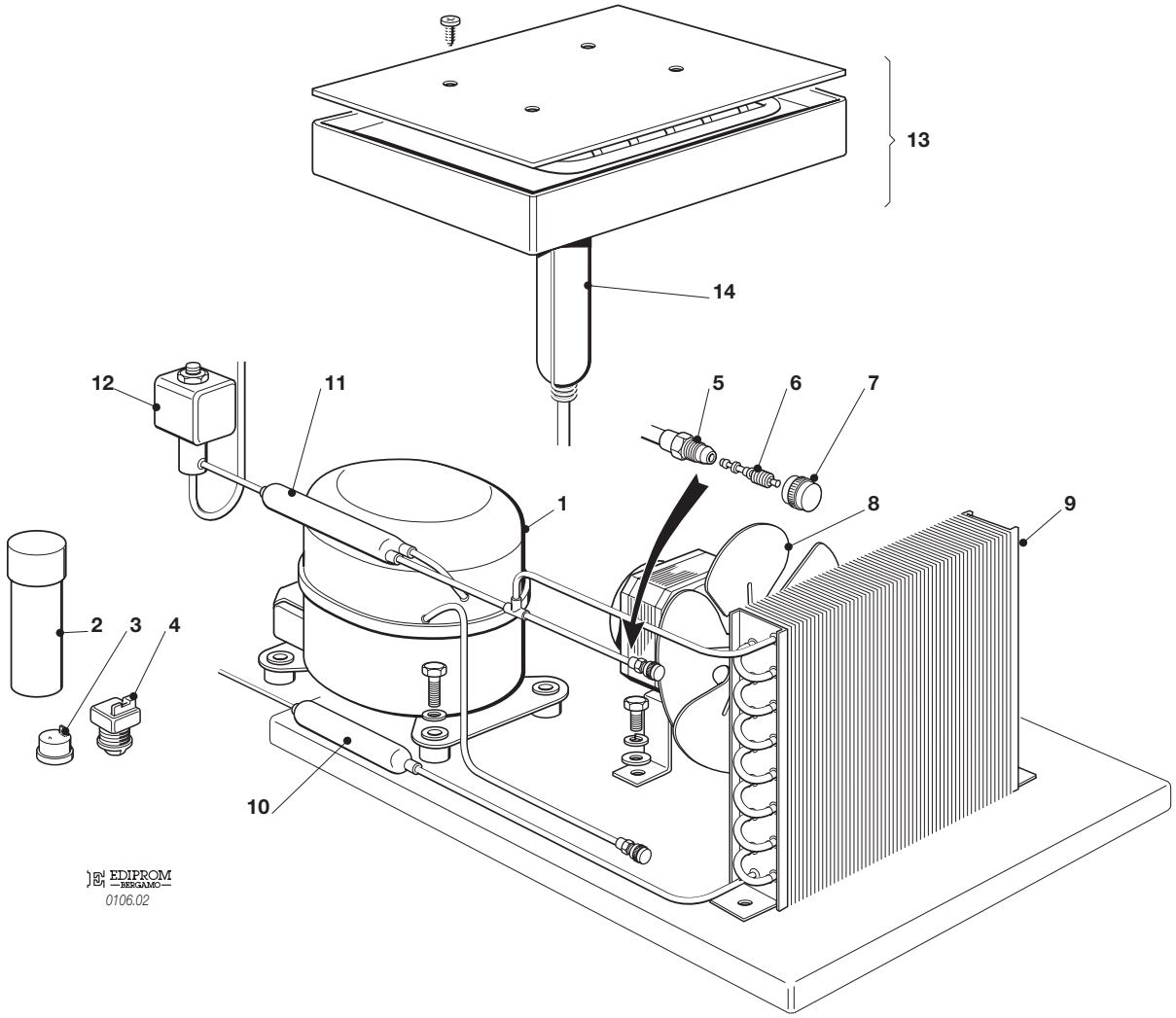
13
14
12
11
5
6
7
1
8
9
2
3
4
10
EDIPROM
BERGAMO
0106.02

SDN 45 - SDN 65 - REFRIGERANT SYSTEM AIR COOLED - SISTEMA REFRIGERANTE RAFFR. AD ARIA CIRCUIT FRIGORIFIQUE REFROID. PAR AIR - LUFTGEKÜHLT GEFRIERSYSTEM

ITEM NO POS NO REP. NO REF. NO	PART NO - CODICE REFERENCE - STUECK NR. **SDN 45**	**SDN 65**	DESCRIPTION	DESCRIZIONE	DESIGNATION	BESCHREIBUNG
1	670100 00	670106 06	COMPRESSOR	COMPRESSORE	COMPRESSEUR	KOMPRESSOR
2	620167 29	620167 30	START CAPACITOR	CONDENSATORE D'AVVIAMENTO	CAPACITE DE DEMARRAGE	START CONDENSATOR
3	620478 03	620478 19	PROTECTOR	PROTETTORE	PROTECTEUR	SCHUTZGERAT
4	620057 31	620057 79	RELAY	RELÈ	RELAIS	RELAIS
5	650109 00		VALVE BODY	CORPO VALVOLA	CORPS DE VANNE	VENTILGEHAUSE
6	670012 00		VALVE PISTON	PISTONCINO VALVOLA	PISTON	VENTILKOLBEN
7	650106 00		VALVE CAP	CAPPUCCIO VALVOLA	CAPUCHON DE VANNE	VENTILKLAPPE
8	620419 02 620419 32	620419 33	FAN MOTOR FAN BLADE	MOTOVENTILATORE VENTOLA	MOTO-VENTILATEUR HELICE	LÜFTERMOTOR FLÜGEL
9	620420 00	620455 00	AIR COOLED CONDENSER	CONDENSATORE AD ARIA	CONDENSEUR	KONDENSATOR
10	630003 05		DRIER	FILTRO DEUMIDIFICATORE	FILTRE DESHYDRATEUR	TROCKNER
11	630137 00	630137 01	MECHANICAL FILTER	FILTRO MECCANICO	FILTRE MECANIQUE	MECHANISCHFILTERN
12	620306 48 620306 27		HOT GAS VALVE COIL HOT GAS VALVE BODY	BOBINA VALVOLA GAS CALDO CORPO VALVOLA GAS CALDO	BOBINE VANNE GAZ CHAUDS CORP VANNE GAZ CHAUDS	HEISSGAZ VENTIL SPULE VENTILGEHAUSE
13	784480 00	784480 01	EVAPORATOR ASSY	ASSIEME EVAPORATORE	ENS. EVAPORATEUR	VERDAMPFER
14	784444 01	784444 15	ACCUMULATOR ASSY	ASSIEME ACCUMULATORE	ENS. ACCUMULATEUR	SAMMLER UND SAUGLEITUNGEN
*	–	620499 00	PRESSURE CONTROL	PRESSOSTATO	PRESSOSTAT	PRESSOSTAT

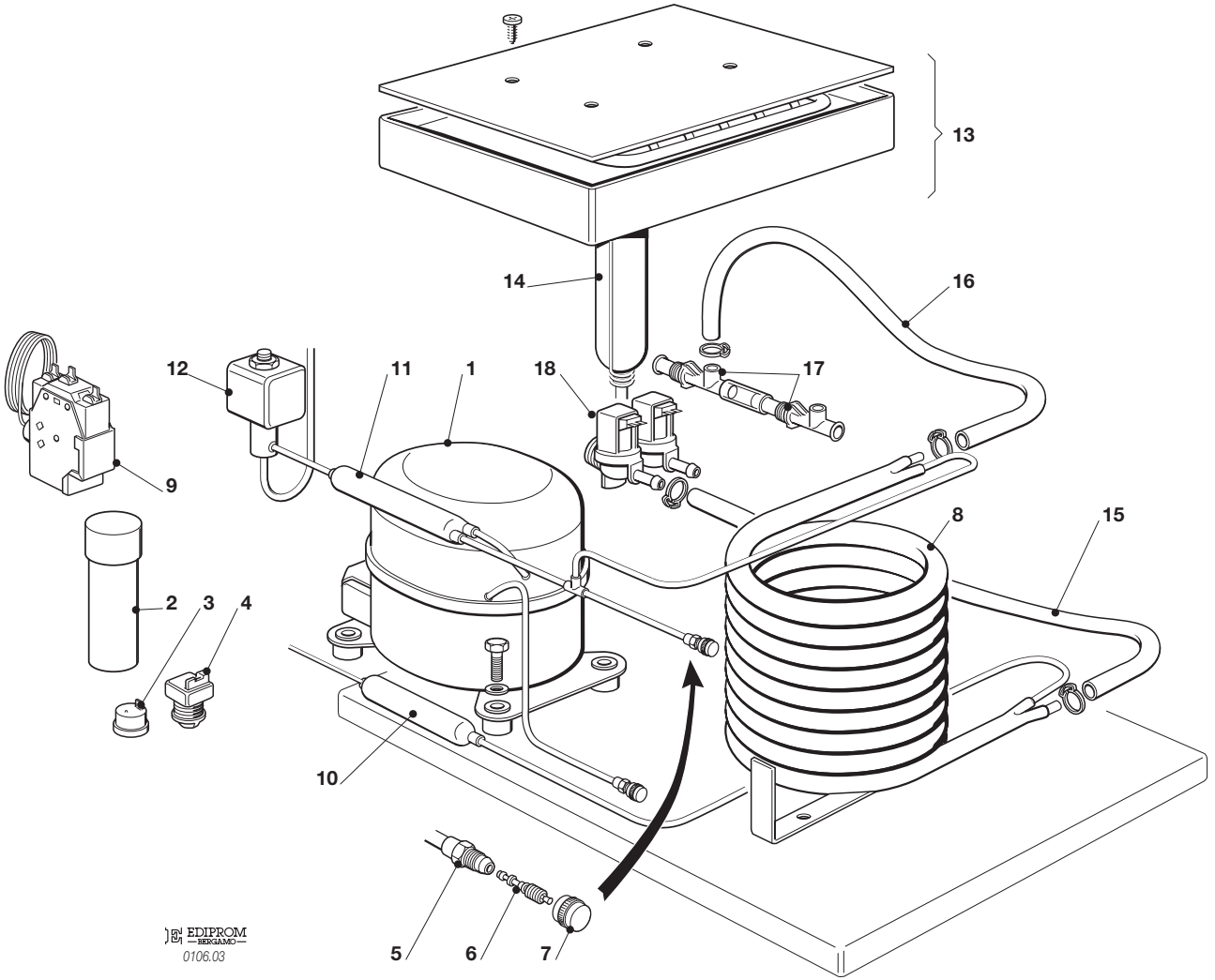
13
14
16
12
11
1
18
17
9
8
15
2
3
4
10
5
6
7
EDIPROM
BERGAMO
0106.03

SDN 45 - SDN 65 - REFRIGERANT SYSTEM WATER COOLED - SISTEMA REFRIGERANTE RAFFR. AD ACQUA
CIRCUIT FRIGORIFIQUE REFROID. PAR EAU - WASSERGEKOHL T GEFRIERSYSTEM

ITEM NO POS NO REP. NO REF. NO	PART NO - CODICE REFERENCE - STUECK NR. **SDN 45**	 **SDN 65**	DESCRIPTION	DESCRIZIONE	DESIGNATION	BESCHREIBUNG
1	670100 00	670106 06	COMPRESSOR	COMPRESSORE	COMPRESSEUR	KOMPRESSOR
2	620167 29	620167 30	START CAPACITOR	CONDENSATORE D'AWIAMENTO	CAPACITE DE DEMARRAGE	START CONDENSATOR
3	620478 03	620478 19	PROTECTOR	PROTETTORE	PROTECTEUR	SCHUTZGERAT
4	620057 31	620057 79	RELAY	RELÈ	RELAIS	RELAIS
5	650109 00		VALVE BODY	CORPO VALVOLA	CORPS DE VANNE	VENTILGEHAUSE
6	670012 00		VALVE PISTON	PISTONCINO VALVOLA	PISTON	VENTILKOLBEN
7	650106 00		VALVE CAP	CAPPUCCIO VALVOLA	CAPUCHON DE VANNE	VENTILKLAPPE
8	620389 00		WATER COOLED CONDENSER	CONDENSATORE ACQUA	CONDENSEUR A EAU	WASSER KONDENSATOR
9	620499 01		PRESSURE CONTROL	PRESSOSTATO	PRESSOSTAT	PRESSOSTAT
10	630003 05		DRIER	FILTRO DEUMIDIFICATORE	FILTRE DESHYDRATEUR	TROCKNER
11	630137 00	63013701	MECHANICAL FILTER	FILTRO MECCANICO	FIL TRE MECANIQUE	MECHANISCHFIL TERN
12	620306 48 620306 27		HOT GAS VALVE COI L HOT GAS VALVE BODY	BOBINA VALVOLA GAS CALDO CORPO VALVOLA GAS CALDO	BOBINE VANNE GAZ CHAUDS CORP VANNE GAZ CHAUDS	HEISSGAZ VENTI L SPULE VENTILGEHAUSE
13	784480 00	784480 01	EVAPORATOR ASSY	ASSIEME EVAPORATORE	ENS. EVAPORATEUR	VERDAMPFER
14	784444 03	784444 15	ACCUMULATOR ASSY	ASSIEME ACCUMULATORE	ENS. ACCUMULATEUR	SAMMLER UND SAUGLEITUNGEN
15	281900 01		PLASTIC TUBE - PER METER	TUBO PVC - PER METRO	TUYAU EN PLASTIQUE - POUR MT.	PLASTIK ROHR - PRO METER
16	281900 01		PLASTIC TUBE - PER METER	TUBO PVC - PER METRO	TUYAU EN PLASTIQUE - POUR MT.	PLASTIK ROHR - PRO METER
17	660993 00		WATER DRAIN FITTING	RACCORDO SCARICO ACQUA	RACCORD EVACUATION EAU	WASSERABFLUSSANSCHLUSSE
18	650105 70		WATER INLET VALVE	ELETTROV AL VOLA DOPPIA	VANNE ARRIVÈE EAU	ELEKTROVENTIL

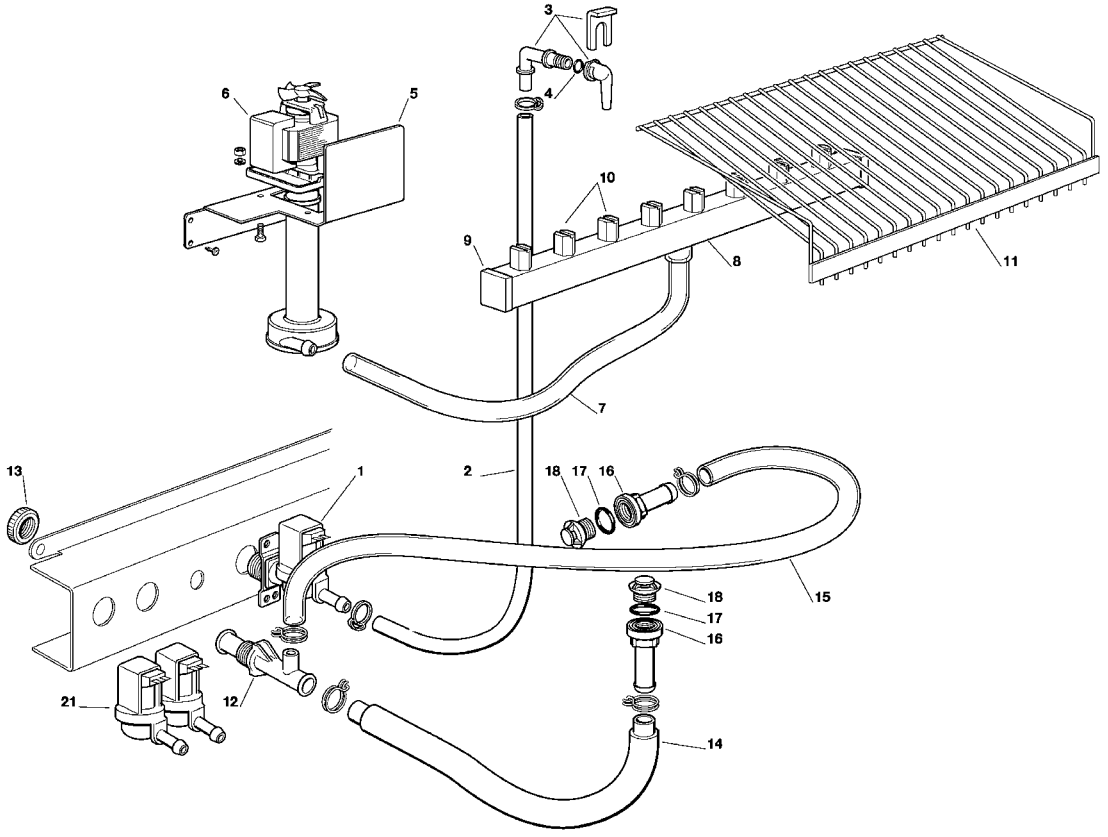
3
4
6
5
10
9
8
11
7
13
1
2
18
17
16
15
18
17
16
21
12
14

SDN 45- SDN 65 - WATER SYSTEM - CIRCUITO IDRAULICO - CIRCUIT HYDRAULIQUE – WASSERSYSTEM -

ITEM NO POS NO REP. NO REF. NO	PART NO CODICE REFERENCE STUECK NR	DESCRIPTION	DESCRIZIONE	DESIGNATION	BESCHREIBUNG
1	650105 66	WATER INLET VALVE - AIR COOLED	ELETTROVALVOLAINGR.ACQUA	ELECTROVANNE ARR. EAU - REFR. AIR	WASSEREINLAUFVENTIL - LUFT
2	281900 01	PLASTIC TUBE - PER METER	TUBO INGRESSO ACQUA	TUYAU EN PLASTIQUE - POUR MT.	PLASTIK ROHR - PRO METER
3	793172 00R	WATER INLET ELBOW ASSY	ASS. INGR. ACQUA A GOMITO	ENS. ENTREE EAU COUDEE	ABGENKELZULAUFROHR
4	640041 31	O-RING	GUARNIZIONE	JOINT TORIQUE	SIMMER RING
5	724333 00	METAL BRACKET	SUPPORTO POMPA	SUPPORT METALLIQUE	METAL TRAEGER
6	620433 00	WATER PUMP	POMPA	POMPE A EAU	WASSER PUMPE
7	610150 03	PUMP INLET WATER PIPE	TUBO MANDATA POMPA	TUYAU EVACUATION	ABFLUSSROHR
8	651559 00 651559 01	SPRAY BAR SDN 45 SPRAY BAR SDN 65	TUBO SPRUZZATORE SDN 45 TUBO SPRUZZATORE SDN 65	COLLECTEUR SDN 45 COLLECTEUR SDN 65	KOLLEKTOR SDN 45 KOLLEKTOR SDN 65
9	660557 00	PLUG	UGELLO SPRUZZATORE	BOUCHON POUR COLLECTEUR	STOPFEN
10	660558 00	SPRAYJET	SPRUZZATORI	GICLEURS	SPROHDOSEN
11	650714 00	ICE DEFLECTOR	GRIGLIA SCORRIMENTO CUBETTI	GRILLE GLiSSEMENT GLAçON	ABGLEITGRILL
12	660224 00	WATER DRAIN FITTING	RACCORDO A "T"	RACCORD EVACUATION EAU	WASSERABFLUSSANSCHLUSSE
13	660211 01	PLASTIC RING NUT	GHIERA	COLLIER DE SERRAGE EN PLAST.	PLASTIKRING MUTTER
14	610148 20	sTORAGE BIN DRAIN	TUBO SCARICO CONTENITORE	TUYAU VIDANGE CONTENEUR	BEHALTERAUSLAUFSCHLAUCH
15	610204 00	OVERFLOW DRAIN TUBE	TUBO SCARICO TROPPO PIENO	TUYAU VIDANGE TROP PLAIN	BEHAL TER ABLAUF
16	660219 01	BIN DRAIN	RACCORDO DI SCARICO	RACCORD EVACUATION	ABFLUSSROHR
17	640134 00	O-RING	GUARNIZIONE	JOINT TORIQUE	SIMMER RING
18	660211 01	DRAIN FIL TER	FILTRO SCARICO	FILTRE EVACUATION EAU	ABFLUSSFIL TER
21	650105 70	WATER INL. VAL. - WATER COOLED	ELETTROVALVOLA INGR. ACQUA	ELECTROV. ARR. EAU c REFR. EAU	WASSEREINLAUFVENTIL - WASSER

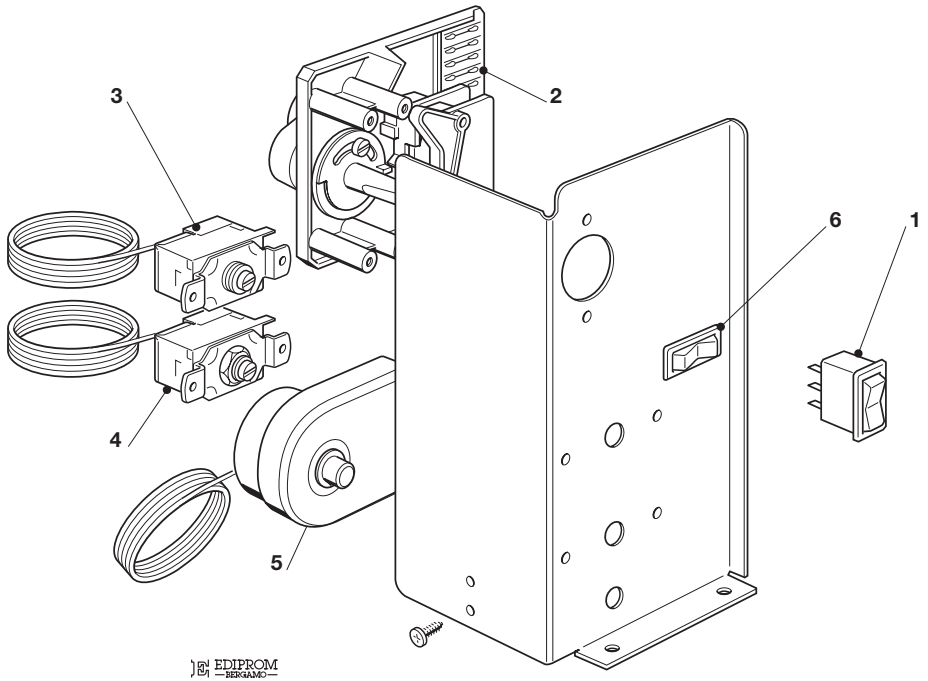

EDIPROM BERGAMO

0106.04

SDN 45 - SDN 65 - CONTROL BOX - SCATOLA DI CONTROLLO - BOITE ELECTRIQUE - SCHALTSCHRANK -

up to/fino a/jusq'à/bis SDN 45 Serial Number 374043

up to/fino a/jusq'à/bis SDN 65 Serial Number 462072

ITEM NO POS. NO REP. NO REF. NO	PART NO CODICE REFERENCE STUECK NR	DESCRIPTION	DESCRIZIONE	DESIGNATION	BESCHREIBUNG
1	620453 00	SWITCH	INTERRUTTORE LUMINOSO	INTERRUPTEUR LUMINEUX	SCHALTER
2	620441 00	TIMER	TIMER	MINUTERIE	TIMER
3	620201 01	EVAPORATOR THERMOSTAT	TERMOSTATO EVAPORATORE	THERMOSTAT EVAPORATEUR	VERDAMPFERTHERMOSTAT
4	630005 00	BIN THERMOSTAT	TERMOSTATO CONTENITORE	THERMOSTAT CONTENEUR	BEHÄLTER THERMOSTAT
5	620443 02	THERMOSTAT - SAFETY	TERMOSTATO DI SICUREZZA	THERMOSTAT DE SECURITÉ	SICHERHEITS THERMOSTAT
6	620442 02	SWITCH	COMMUTATORE UNIPOLARE	INTERRUPTEUR	UMSCHALTER

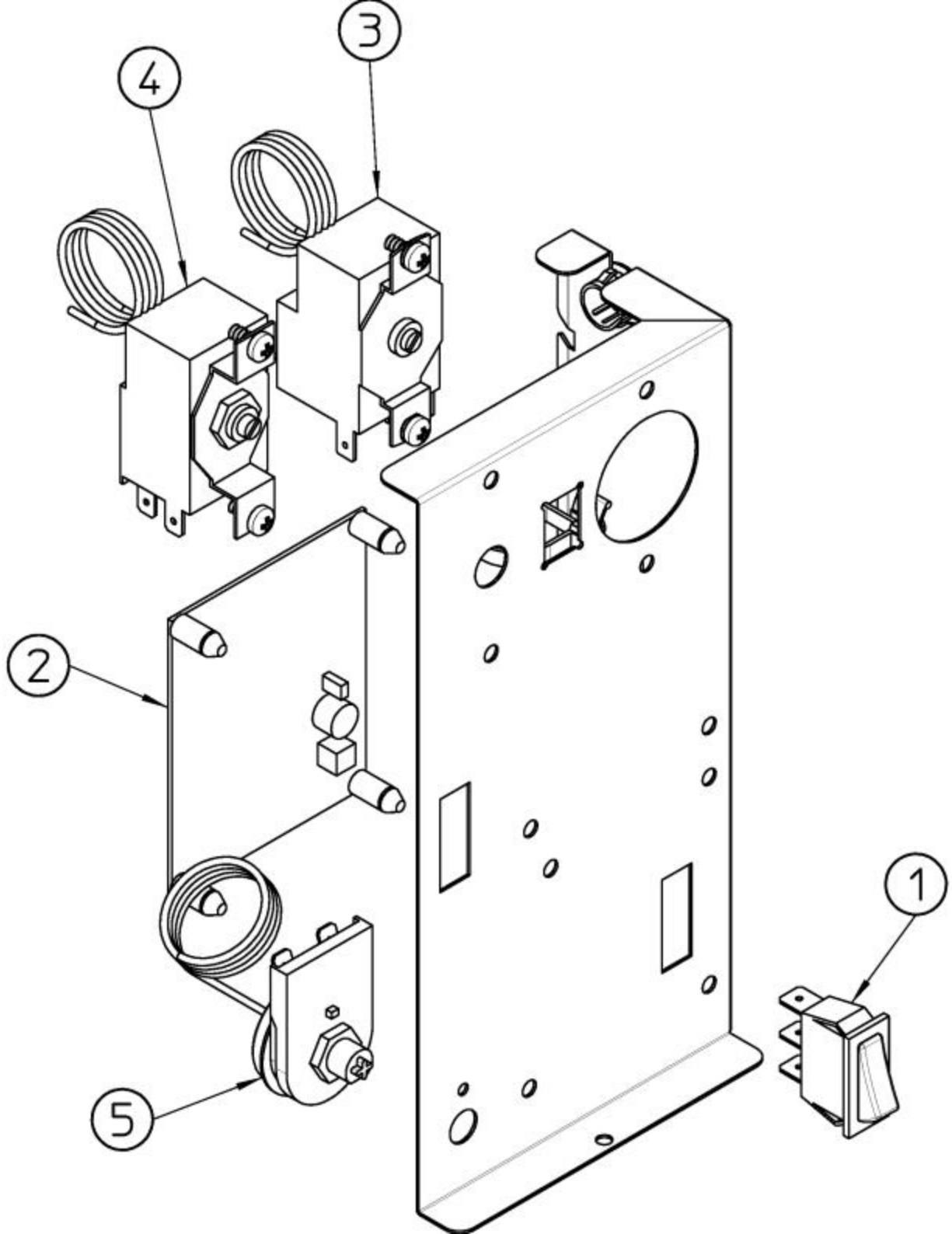
4
3
2
1
5

SDN 45 - SDN 65 - CONTROL BOX - SCATOLA DI CONTROLLO - BOITE ELECTRIQUE - SCHALTSCHRANK -

from/dal/a partir du/von SDN 45 Serial Number 374044

from/dal/a partir du/von SDN 65 Serial Number 462073

ITEM NO POS. NO REP. NO REF. NO	PART NO CODICE REFERENCE STUECK NR	DESCRIPTION	DESCRIZIONE	DESIGNATION	BESCHREIBUNG
1	620453 00	SWITCH	INTERRUTTORE LUMINOSO	INTERRUPTEUR LUMINEUX	SCHALTER
2	620507 00	ELECTRONIC TIMER	TIMER ELETTRONICO	MINUTERIE ELECTRONIQUE	ELEKTRONISCHER TIMER
3	630005 00	BIN THERMOSTAT	TERMOSTATO CONTENITORE	THERMOSTAT CONTENEUR	BEHÄLTER THERMOSTAT
4	620201 01	EVAPORATOR THERMOSTAT	TERMOSTATO EVAPORATORE	THERMOSTAT EVAPORATEUR	VERDAMPFERTHERMOSTAT
5	620443 02	THERMOSTAT - SAFETY	TERMOSTATO DI SICUREZZA	THERMOSTAT DE SECURITÉ	SICHERHEITS THERMOSTAT



Via Pascoli, 22 - 20010 Pogliano Milanese (Milano) Italy
Tel. +39 02 93900215 (Commerciale - Sales Dept.)
Tel. +39 02 93960357 (Assistenza - Service Dept.)
Fax +39 02 93900226 (Commerciale - Sales Dept.)
Fax +39 02 93960366 (Assistenza - Service Dept.)
E-mail: sales@simag.it • service@simag.it
www.simag.it