DESPIECE TECNICO / SPARE PARTS BOM

# Hornos eléctricos
# Fours électriques
# Electric ovens
# Elecktro heissluftdämpfer
# Forni elettrici
# Fornos eletricos

## Modelos / Models:

**AE-201**
**ACE-201**
**APE-201**

***Septiembre 2012 September***
***Revisado Julio 2015 July Revised***

FAGOR

FAGOR INDUSTRIAL

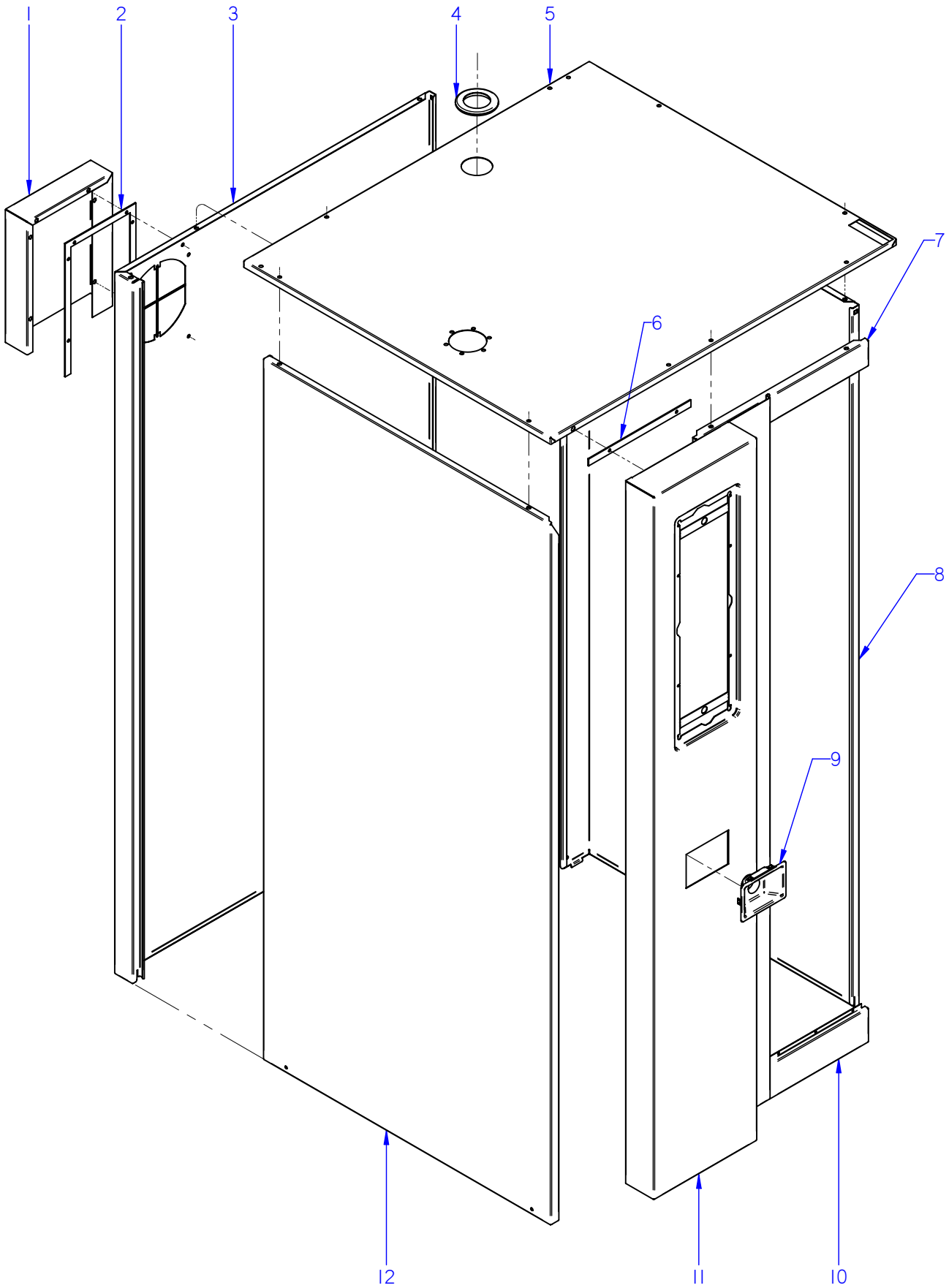


ITEM MARCADO EN COLOR = REPUESTO RECOMENDADO
COLOURED ITEM = RECOMMENDED SPARE PART

| Nº plano / N º plane | Firma | Fecha / Date | Denominación / Denomination: MUEBLE / UNIT | Lamina / Sheet | |
|---|---|---|---|---|---|
| C-3022 | | 2012-09 | HORNOS AE; ACE; APE-201 | 1 | Fagor Industrial S.Coop. FAGOR Oñate |

| MOD. | HORNOS / OVEN | ZONA / ZONE | MUEBLE / UNIT | PLANO DIAGRAM | C-3022 |
|---|---|---|---|---|---|

| ITEM | CODIGO REFERENCE | DENOMINACION | DENOMINATION | ACE-201 | AE-201 | APE-201 | | | | | | ELIMINADO ELIMINATED | INTRODUCID. INTRODUCED | NOTAS |
|---|---|---|---|---|---|---|---|---|---|---|---|---|---|---|
| 1 | 12022556 | CHAPA SEPARACION IPX5 20-21 | SEPARATION PLATE IPX5 20-21 | 1 | 1 | 1 | | | | | | 01.11.12 | | |
| 1 | 12022557 | CHAPA SEPARACI. IPX5 20 SOLD. | SEPARAT. PLATE IPX5 20 WEL. | 1 | 1 | 1 | | | | | | | 01.11.12 | |
| | 12010163 | REMACHE EXAGONAL M.5 | HEXAGONAL RIVET M.5 | 12 | 12 | 12 | | | | | | | | |
| 2 | 12024081 | JUNTA IPX5 20-21 | SEAL IPX5 20-21 | 1 | 1 | 1 | | | | | | | | |
| | 12009944 | ARANDELA A5 | FLAT WASHER A.5 | 6 | 6 | 6 | | | | | | | | |
| | 12009890 | ARANDELA ABANICO A5 A.304 | FAN SHAPED WASHER A.5 | 6 | 6 | 6 | | | | | | | | |
| | 12010238 | TORNILLO EXAGONAL M5X10 | HEXAGONAL BOLT M5X10 | 6 | 6 | 6 | | | | | | | | |
| 3 | 12041103 | PANEL POSTERIOR 201 ADV | REAR PANEL 201 ADV | 1 | 1 | 1 | | | | | | | | |
| 4 | 12024231 | PASAMUROS CHIMENEA 101003361 | FEED THROUGH FLUE PIPE 1010( | 2 | 2 | 2 | | | | | | | | |
| | 12010242 | TORNIL. APLASTADO M5X13 A 304 | FLAT SCREW M.5x13 | 8 | 8 | 8 | | | | | | | | |
| 5 | 12043253 | PANEL SUPERIOR SOLD. AE 201 | TOP PANEL AE 201 SOLDIER | 1 | 1 | 1 | | | | | | | | |
| 6 | 12041319 | JUNTA PORTAMANDOS 201 ADV | CONTROL PANEL SEAL 201 ADV | 1 | 1 | 1 | | | | | | 31.01.14 | | |
| 7 | 12041125 | PANEL FRONTAL SUPE. 201 ADV | UPPER FRONT PANEL 201 ADV | 1 | 1 | 1 | | | | | | | | |
| | 12010163 | REMACHE EXAGONAL M.5 | HEXAGONAL RIVET M.5 | 2 | 2 | 2 | | | | | | | | |
| | 12010065 | REMACHE AVINOX Ø3.2X6MM | AVINOX Ø3.2X6MM RIVET | 7 | 7 | 7 | | | | | | | | |
| 8 | 12041123 | PANEL EXTERIOR DCHO 201 ADV | RIGHT PANEL 201 ADV | 1 | 1 | 1 | | | | | | | | |
| 9 | 12041736 | EMBELLECEDOR DUCHA AD | SHOWER TRIM AD | _ | 1 | 1 | | | | | | 31.01.14 | | |
| 10 | 12041126 | PANEL FRONTAL INFER. 201 ADV | LOWER FRONT PANEL 201 ADV | _ | 1 | 1 | | | | | | | | |
| | 12010065 | REMACHE AVINOX Ø3.2X6MM | AVINOX Ø3.2X6MM RIVET | 7 | 7 | 7 | | | | | | | | |
| 11 | 12043998 | PANEL PORTAMANDOS ACE 201 | CONTROL PANEL ACE 201 | 1 | _ | _ | | | | | | 01.10.13 | | |
| 11 | 12095164 | PANEL PORTAMANDOS AC 201 | CONTROL PANEL AC 201 | 1 | _ | _ | | | | | | 28.03.14 | 02.10.13 | |
| 11 | 12097893 | MOD PORTAMANDO 201 ACE | CONTROL PANEL 201 ACE | 1 | _ | _ | | | | | | | 28.03.14 | |
| 11 | 12041099 | PANEL PORTAMANDOS AE 201 | CONTROL PANEL AE 201 | _ | 1 | _ | | | | | | 01.10.13 | | |
| 11 | 12043844 | PANEL PORTAMANDOS APE 201 | CONTROL PANEL APE 201 | _ | 1 | _ | | | | | | 28.03.14 | 01.10.13 | |
| 11 | 12043844 | PANEL PORTAMANDOS APE 201 | CONTROL PANEL APE 201 | _ | _ | 1 | | | | | | 28.03.14 | | |
| 11 | 12097708 | MOD PORTAMANDO 201 ADV-PL. | CONTROL PANEL 201 ADV-PL. | _ | 1 | 1 | | | | | | | 28.03.14 | |
| 12 | 12041157 | PANEL EXT. IZQUIERDO 201 ADV | REAR LEFT PANEL 201 ADV | 1 | 1 | 1 | | | | | | | | |
| | 12010163 | REMACHE EXAGONAL M.5 | HEXAGONAL RIVET M.5 | 3 | 3 | 3 | | | | | | | | |
| | 12010242 | TORNIL. APLASTADO M5X13 A 304 | FLAT SCREW M.5x13 | 4 | 4 | 4 | | | | | | | | |
| | | | | | | | | | | | | | | |
| | | | | | | | | | | | | | | |

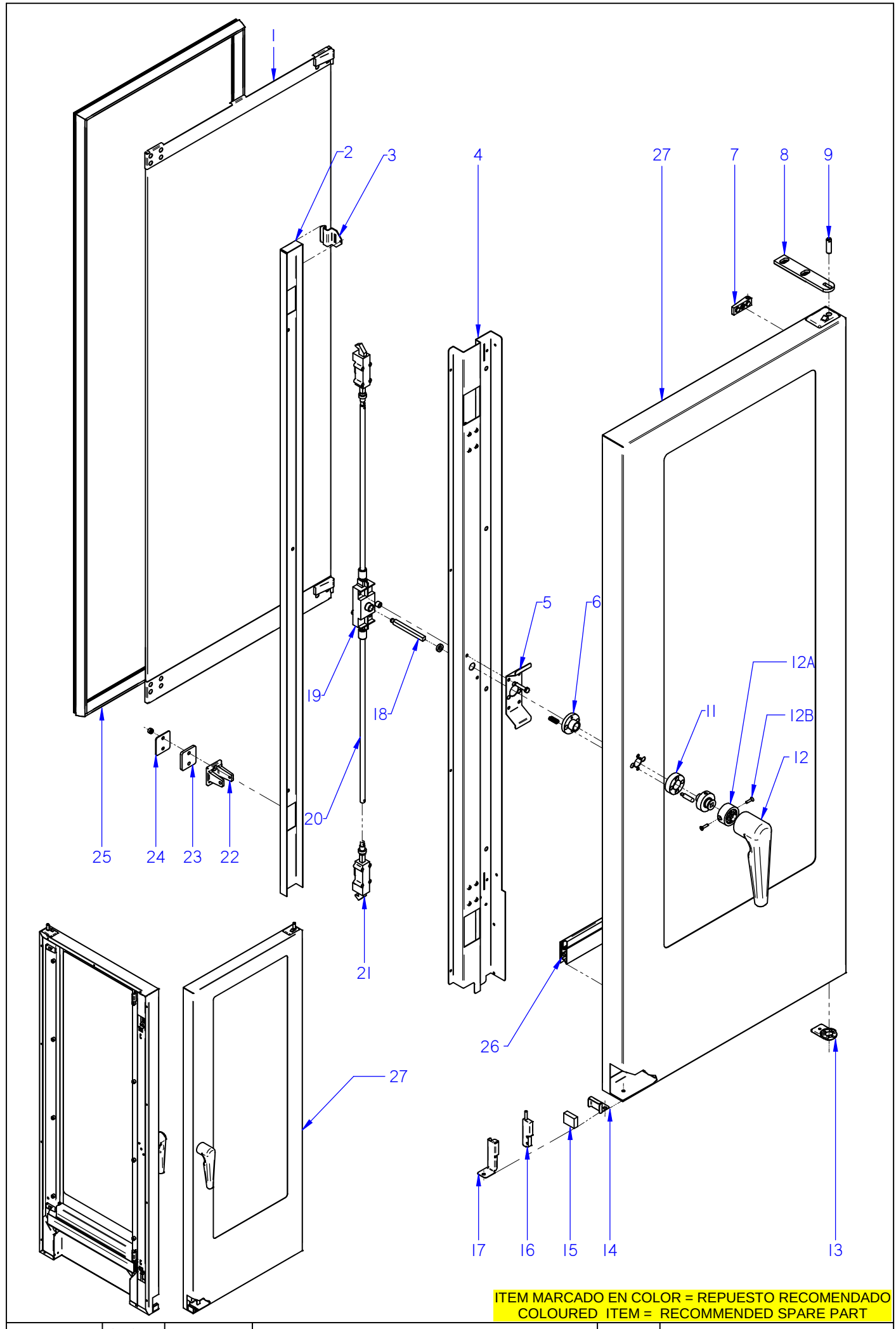


ITEM MARCADO EN COLOR = REPUESTO RECOMENDADO
COLOURED ITEM = RECOMMENDED SPARE PART

| Nº plano / N º plane | Firma / Signature | Fecha / Date | Denominación / Denomination: PUERTA / DOOR | Lamina / Sheet | |
|---|---|---|---|---|---|
| C-3023 | Iban R. | 06-2015 | HORNOS AE; ACE; APE-201 | 2 | Fagor Industrial S.Coop. FAGOR Oñate |

| MOD. | HORNOS / OVEN | ZONA / ZONE | PUERTA (HASTA 06-2014) / DOOR (UNTIL 06-2014) | PLANO DIAGRAM | C-3023 |
|---|---|---|---|---|---|

| ITEM | CODIGO REFERENCE | DENOMINACION | DENOMINATION | ACE-201 | AE-201 | APE-201 | | | | | | ELIMINADO ELIMINATED | INTRODUCID. INTRODUCED | NOTAS |
|---|---|---|---|---|---|---|---|---|---|---|---|---|---|---|
| **1** | **12041083** | **KIT CRISTAL INTER. 201** | **201 INNER GLASS KIT** | **1** | **1** | **1** | | | | | | | | |
| 2 | 12039324 | TAPA CIERRE PUERTA 202 | DOOR CLOSING COVER 202 | 1 | 1 | 1 | | | | | | | | |
| | 12010226 | TORNILLO ALOMADO.M5X10 | CURVED SCREW .M5X10 | 2 | 2 | 2 | | | | | | | | |
| | 12010278 | TORNILLO ALOMADO M4X10 | CURVED SCREW M.4x10 | 2 | 2 | 2 | | | | | | | | |
| 3 | 12024319 | PESTILLO | INNER GLASS HINGE | 2 | 2 | 2 | | | | | | | | |
| 4 | 12039302 | CONTRAPUERTA MANILLA 202 | COMPLETE HANDLE DOOR 202 | 1 | 1 | 1 | | | | | | | | |
| 5 | 12039326 | SUPLEMENTO SUJ. CERRADURA | LOCK FIXING SUPPLEMENT | 1 | 1 | 1 | | | | | | | | |
| 6 | 12024389 | GUIA MANILLA | HANDLE GUIDE | 1 | 1 | 1 | | | | | | | | |
| | 12023608 | PITON ENGANCHE PUERTA | DOOR FASTENER SPIKE | 2 | 2 | 2 | | | | | | | | |
| 7 | 12024402 | BASE DE BISAGRA | HINGE BASE | 2 | 2 | 2 | | | | | | | | |
| | 12010209 | TORNILLO AVELLANADO M5X15 | COUNTERSUNK SCREW M.5x15 | 2 | 2 | 2 | | | | | | | | |
| 8 | 12039312 | BISAGRA SUPERIOR | UPPER HINGE | 1 | 1 | 1 | | | | | | | | |
| | 12009882 | ARANDELA ABANICO A6 A.304 | FAN SHAPED WASHER A.6 | 3 | 3 | 3 | | | | | | | | |
| | 12010106 | TORNILLO ALLEN INOX. M6X35MM | ALLEN BOLT STAINLE.M6X35MM | 3 | 3 | 3 | | | | | | | | |
| 9 | 12023636 | EJE SUPERIOR | UPPER SHAFT | 1 | 1 | 1 | | | | | | | | |
| | 12023631 | ARANDELA AMARRE | DOOR ANCHORING WASHER | 1 | 1 | 1 | | | | | | | | |
| | 12023716 | RESORTE 06329 | SPRING 06329 | 1 | 1 | 1 | | | | | | | | |
| | 12009882 | ARANDELA ABANICO A6 A.304 | FAN SHAPED WASHER A.6 | 1 | 1 | 1 | | | | | | | | |
| | 12010186 | TORNILLO EXAGONAL M6X15 A304 | HEXAGONAL SCREW M6X15 | 1 | 1 | 1 | | | | | | | | |
| 11 | 12024505 | SOPORTE RESORTE | SPRING HOLDER | 1 | 1 | 1 | | | | | | | | |
| | 12024164 | RESORTE 34548 | SPRING | 2 | 2 | 2 | | | | | | | | |
| | 12010213 | TORNILLO ALOMADO M5x15 | CURVED SCREW M.5x15 | 2 | 2 | 2 | | | | | | | | |
| 12 | 12044776 | ASA COMPLETA 2/1 ADVANCE | HANDLE 2/1 ADVANCE | 1 | 1 | 1 | | | | | | | | |
| | 12010236 | VARILLA ROSCADA M6X15 | THREADED ROD M.6x15 | 1 | 1 | 1 | | | | | | | | |
| 12A | 12102288 | INSERTO AMARRE | FASTENING INSERT | 1 | 1 | 1 | | | | | | | 09,06,15 | |
| 12B | 12010262 | TORNILLO AVELLANADO M4X15 | COUNTERSUNK SCREW M4x15 | 2 | 2 | 2 | | | | | | | 09,06,15 | |
| 13 | 12039311 | BASE BISAGRA INFERIOR PUERTA | LOWER DOOR HINGE BASE | 1 | 1 | 1 | | | | | | 02.09.13 | | |
| 13 | 12047967 | BASE BISAGRA INFERIOR 6 DIEN | LOWER HINGE BASE | 1 | 1 | 1 | | | | | | | 02.09.13 | |
| | 12009944 | ARANDELA A5 | FLAT WASHER A.5 | 1 | 1 | 1 | | | | | | | | |
| 14 | 12022049 | SOPORTE IMAN | MAGNET HOLDER | 1 | 1 | 1 | | | | | | | | |
| | 12009970 | REMACHE EXAGONAL M.5 | HEXAGONAL RIVET M.5 | 1 | 1 | 1 | | | | | | | | |

| MOD. | HORNOS / OVEN | ZONA / ZONE | PUERTA (HASTA 06-2014) / DOOR (UNTIL 06-2014) | PLANO DIAGRAM | C-3023 |
|---|---|---|---|---|---|

| ITEM | CODIGO REFERENCE | DENOMINACION | DENOMINATION | ACE-201 | AE-201 | APE-201 | | | | | | ELIMINADO ELIMINATED | INTRODUCID. INTRODUCED | NOTAS |
|---|---|---|---|---|---|---|---|---|---|---|---|---|---|---|
| | 12010213 | TORNILLO ALOMADO M5X10 | CURVED SCREW M5X10 | 1 | 1 | 1 | | | | | | | | |
| 15 | 12024384 | IMAN | MAGNET | 1 | 1 | 1 | | | | | | | | |
| | 12009890 | ARANDELA ABANICO A5 A.304 | FAN SHAPED WASHER A.5 | 1 | 1 | 1 | | | | | | | | |
| | 12010242 | TORNIL. APLASTADO M5X13 A 304 | FLAT SCREW M.5x13 | 1 | 1 | 1 | | | | | | | | |
| 16 | 12024560 | INTERRUPTOR MAGNETICO AC | MAGNETIC SWITCH AC | 1 | 1 | 1 | | | | | | | | |
| 17 | 12022166 | SOPORTE MICRO PUERTA | DOOR MICRO SWITCH | 1 | 1 | 1 | | | | | | | | |
| | 12010242 | TORNIL. APLASTADO M5X13 A 304 | FLAT SCREW M.5x13 | 1 | 1 | 1 | | | | | | | | |
| 18 | 12024799 | EJE DE MANILLA PUERTA | LEVER SHAFT | 1 | 1 | 1 | | | | | | | | |
| | 12024245 | CASQUILLO | BUSHING | 1 | 1 | 1 | | | | | | | | |
| 19 | 12024673 | MECANISMO CIERRE | CLOSING MECHANISM | 1 | 1 | 1 | | | | | | | | |
| S/Nº | 12010292 | PASADOR DE ALETAS 2X20 | COTTER PIN 2x15 | 4 | 4 | 4 | | | | | | | | |
| | 12009882 | ARANDELA ABANICO A6 A.304 | FAN SHAPED WASHER A.6 | 2 | 2 | 2 | | | | | | | | |
| | 12010255 | TORNILLO EXAGONAL M6 INOX. | HEXAGONAL SCREW M6 INOX. | 2 | 2 | 2 | | | | | | | | |
| | 12023506 | CASQUILLO AMARRE TECLADO | COLLAR | 2 | 2 | 2 | | | | | | | | |
| 20 | 12039308 | TUBO ALARGADERA 201/202 ADV | ROD 201/202 ADV | 2 | 2 | 2 | | | | | | | | |
| 21 | 12024657 | ELEMENTO CIERRE | CLOSING COMPONENT | 2 | 2 | 2 | | | | | | | | |
| | 12009890 | ARANDELA ABANICO A5 A.304 | FAN SHAPED WASHER A.5 | 8 | 8 | 8 | | | | | | | | |
| | 12010284 | TORNILLO EXAGONAL M5 INOX. | HEXAGONAL SCREW M5 INOX. | 8 | 8 | 8 | | | | | | | | |
| 22 | 12024495 | ENGANCHE PUERTA | FASTENER | 2 | 2 | 2 | | | | | | | | |
| 23 | 12024380 | SUPLEMENTO ENGANCHE | FASTENER SUPPLEMENT | 2 | 2 | 2 | | | | | | | | |
| 24 | 12022138 | CALZO DE ENGANCHE | COUPLING CHOCK | 4 | 4 | 4 | | | | | | | | |
| 25 | 12041134 | JUNTA PUERTA COMPL.201 ADV | DOOR JOINT 201 ADV | 1 | 1 | 1 | | | | | | | | |
| 26 | 12041088 | JUNTA CIERRE INFERIOR 201 | LOWER LOCK JOINT 201 | 1 | 1 | 1 | | | | | | | | |
| **27** | **12046022** | **KIT PUERTA 201** | **DOOR 201 KIT** | **1** | **1** | **1** | | | | | | | | |
| | | | | | | | | | | | | | | |
| | | | | | | | | | | | | | | |
| | | | | | | | | | | | | | | |
| | | | | | | | | | | | | | | |
| | | | | | | | | | | | | | | |
| | | | | | | | | | | | | | | |
| | | | | | | | | | | | | | | |

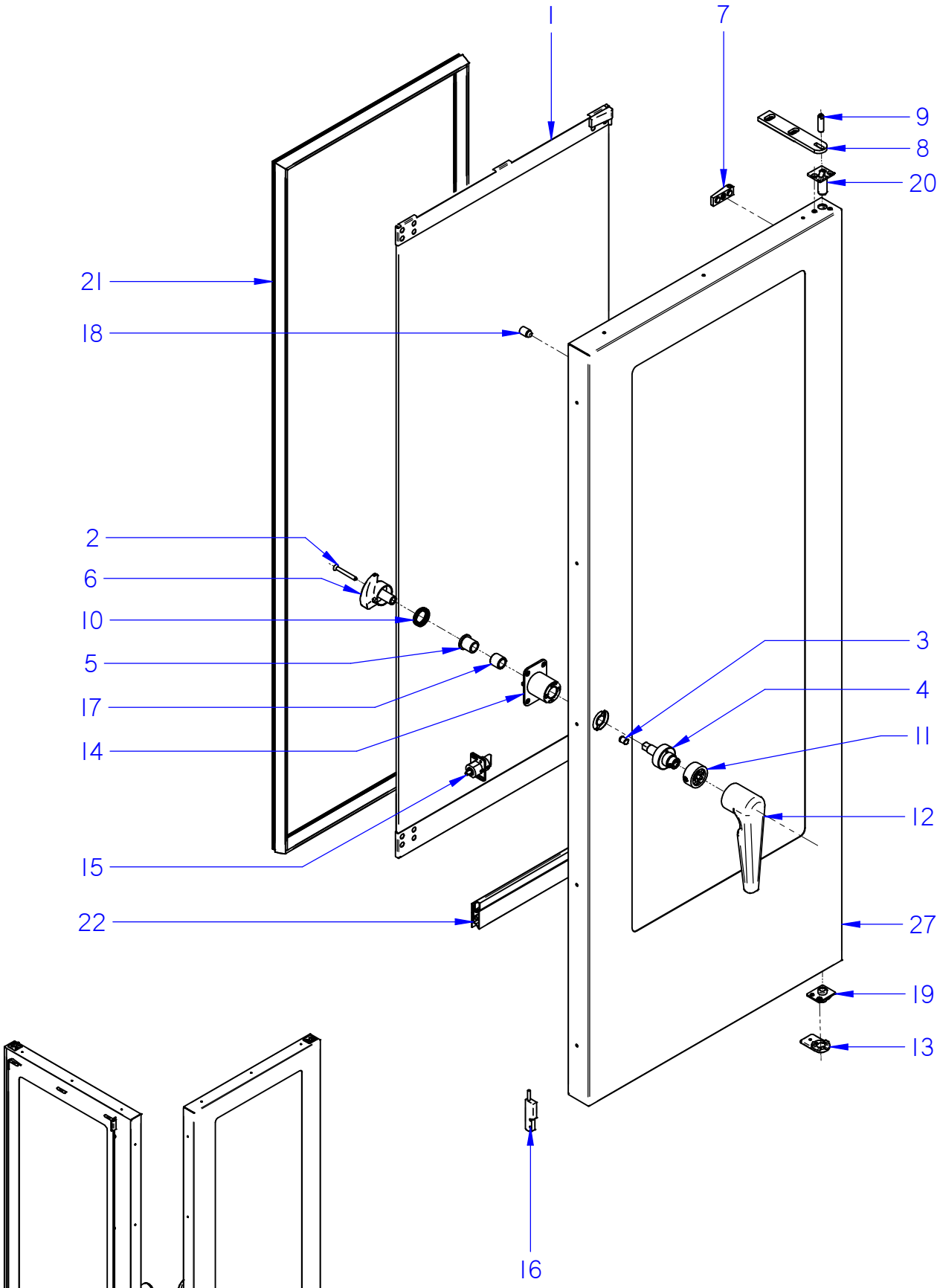


ITEM MARCADO EN COLOR = REPUESTO RECOMENDADO
COLOURED ITEM = RECOMMENDED SPARE PART

| Nº plano / Drawing N. | Firma / Signature | Fecha / Date | Denominación / Denomination: PUERTA / DOOR | Lamina / Sheet | |
|---|---|---|---|---|---|
| C-3023-14 | Iban R. | 2014-06 | HORNOS AE; ACE; APE-201 | 2-14 | Fagor Industrial S.Coop. FAGOR Oñate |

| MOD. | HORNOS / OVEN | ZONA / ZONE | PUERTA (DESDE 06-2014) / DOOR (FROM 06-2014) | PLANO DIAGRAM | C-3023-14 |
|---|---|---|---|---|---|

| ITEM | CODIGO REFERENCE | DENOMINACION | DENOMINATION | ACE-201 | AE-201 | APE-201 | | | | | | ELIMINADO ELIMINATED | INTRODUCID. INTRODUCED | NOTAS / NOTES |
|---|---|---|---|---|---|---|---|---|---|---|---|---|---|---|
| 1 | **12041083** | **KIT CRISTAL INTER. 201** | **201 INNER GLASS KIT** | **1** | **1** | **1** | | | | | | | | |
| 2 | 12097552 | TORNILLO AVELLANADO M6x50 | COUNTERSAUNK SCREW M6x50 | 1 | 1 | 1 | | | | | | | 12,03,14 | |
| 3 | 12049719 | POSICIONADOR DE BOLA MUELLE | BALL-SPRING FIXER | 1 | 1 | 1 | | | | | | | 12,03,14 | |
| 4 | 12049683 | INSERTO ASA 20X CIERRE UNICO | HANDLE INSERT 20X SING. LOCK | 1 | 1 | 1 | | | | | | | 12,03,14 | |
| 5 | 12025100 | CASQUILLO SELFOIL 16-22-25 | SELFOIL BUSHING 16-22-25 | 1 | 1 | 1 | | | | | | | 12,03,14 | |
| 6 | 12049692 | LEVA CIERRE UNICO 20X ADV | SINGLE LOCK CAM 20X ADV | 1 | 1 | 1 | | | | | | | 12,03,14 | |
| 7 | 12024402 | BASE DE BISAGRA | HINGE BASE | 2 | 2 | 2 | | | | | | | | |
| 8 | 12039312 | BISAGRA SUPERIOR | UPPER HINGE | 1 | 1 | 1 | | | | | | | | |
| 9 | 12023636 | EJE SUPERIOR | UPPER SHAFT | 1 | 1 | 1 | | | | | | | | |
| 10 | 12093685 | MUELLE LEVA PUERTA ADVANCE | CAM SPRING ADVANCE DOOR | 1 | 1 | 1 | | | | | | | 12,03,14 | |
| 11 | 12102288 | INSERTO AMARRE ADV 202 | FASTENING INSERT ADV 202 | 1 | 1 | 1 | | | | | | | 12,03,14 | |
| 12 | 12044773 | ASA ADVANCE | ADVANCE HANDLE | 1 | 1 | 1 | | | | | | | 12,03,14 | |
| 13 | 12047967 | BASE BISAGRA INFERIOR 6 DIEN | LOWER HINGE BASE | 1 | 1 | 1 | | | | | | | | |
| 14 | 12049691 | SOPORTE MANILLA 20X | 20X HANDLE SUPPORT | 1 | 1 | 1 | | | | | | | 12,03,14 | |
| 15 | 12113376 | MOD PITON PUERTA | DOOR BOLT MODULE | 1 | 1 | 1 | | | | | | | 12,03,14 | |
| 16 | 12024560 | INTERRUPTOR MAGNETICO AC | MAGNETIC SWITCH AC | 1 | 1 | 1 | | | | | | | | |
| 17 | 12097533 | CASQUILLO SELFOIL TIPOA 16-22-20 | SELFOIL BUSHING 16-22-20 | 1 | 1 | 1 | | | | | | | 12,03,14 | |
| 18 | 12024794 | TOPE CRISTAL INTERIOR | INNER GLASS BLOCK | 9 | 9 | 9 | | | | | | | | |
| 19 | 12049660 | BISAGRA INF. 202 ADV 6 DIENTES | LOWER HINGE 202 ADV. 6 TEETH | 1 | 1 | 1 | | | | | | | | |
| 20 | 12049282 | BISAGRA SUP. 202 TOPE ALTO | TOP HINGE 202 | 1 | 1 | 1 | | | | | | | | |
| 21 | 12041134 | JUNTA PUERTA COMPL.201 ADV | DOOR JOINT 201 ADV | 1 | 1 | 1 | | | | | | | | |
| 22 | 12041088 | JUNTA CIERRE INFERIOR 201 | LOWER LOCK JOINT 201 | 1 | 1 | 1 | | | | | | | | |
| 23 | **12097686** | **KIT PUERTA 201 CIERRE UNICO** | **SINGLE LOCK DOOR 201 KIT** | **1** | **1** | **1** | | | | | | | | |
| | | | | | | | | | | | | | | |
| | | | | | | | | | | | | | | |
| | | | | | | | | | | | | | | |
| | | | | | | | | | | | | | | |
| | | | | | | | | | | | | | | |
| | | | | | | | | | | | | | | |
| | | | | | | | | | | | | | | |
| | | | | | | | | | | | | | | |

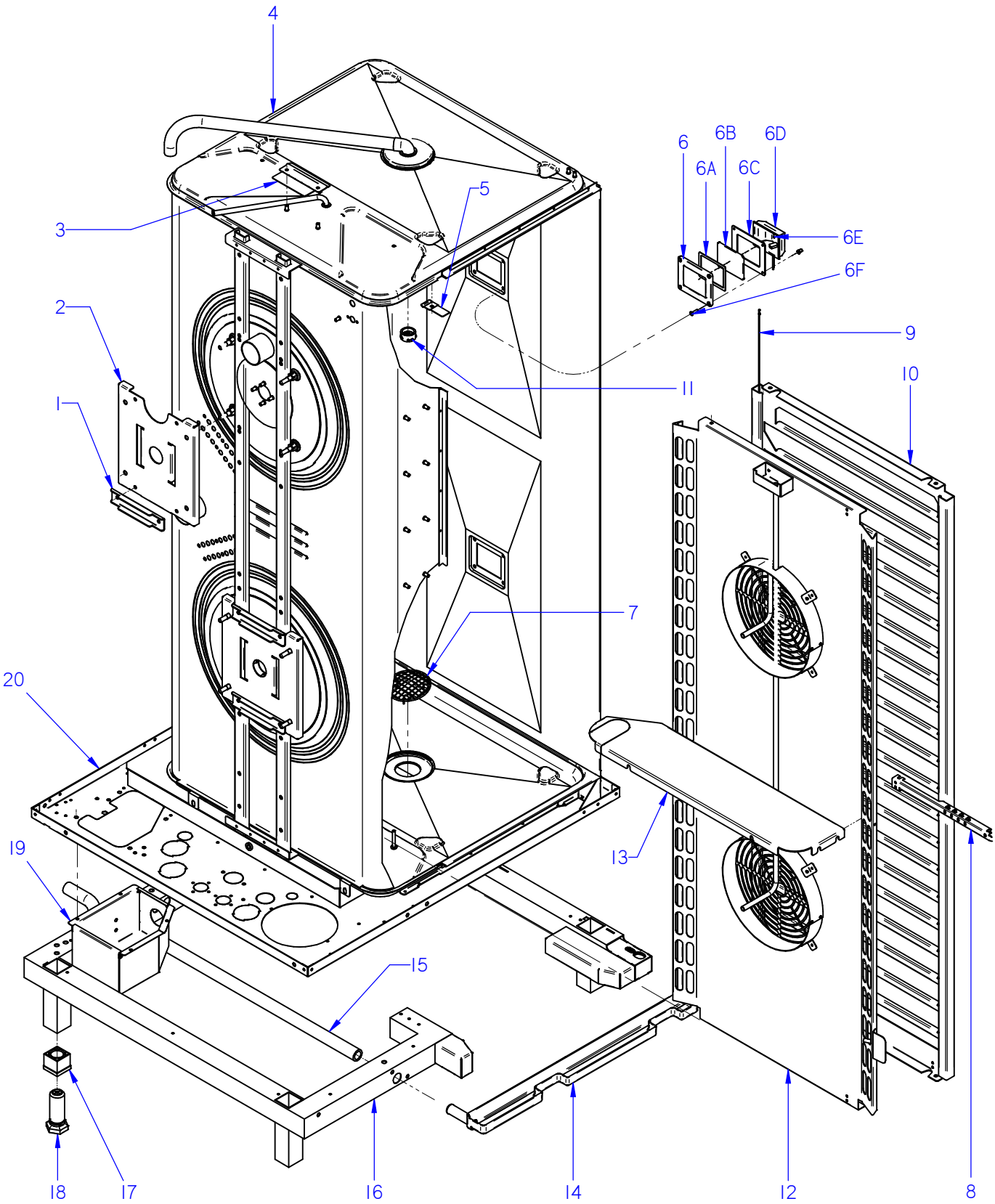


ITEM MARCADO EN COLOR = REPUESTO RECOMENDADO
COLOURED ITEM = RECOMMENDED SPARE PART

| Nº plano / N º plane | Firma / Signature | Fecha / Date | Denominación / Denomination: MUEBLE INTERIOR / INTERIOR OVEN | Lamina / Sheet | |
|---|---|---|---|---|---|
| C-3024 | Iban R. | 03-2015 | HORNOS AE; ACE; APE-201 | 3 | Fagor Industrial S.Coop. FAGOR Oñate |

| MOD. | HORNOS / OVEN | ZONA / ZONE | MUEBLE INTERIOR / INTERIOR OVEN | PLANO DIAGRAM | C-3024 |
|---|---|---|---|---|---|

| ITEM | CODIGO REFERENCE | DENOMINACION | DENOMINATION | ACE-201 | AE-201 | APE-201 | | | | | | ELIMINADO ELIMINATED | INTRODUCID. INTRODUCED | NOTAS |
|---|---|---|---|---|---|---|---|---|---|---|---|---|---|---|
| 1 | 12039460 | REFUERZO MOTOR | MOTOR REINFORCEMENT | 3 | 3 | 3 | | | | | | | | |
| | 12009944 | ARANDELA A5 | FLAT WASHER A.5 | 8 | 8 | 8 | | | | | | | | |
| | 12010221 | TORNILLO EXAGONAL M5X15 | HEXAGONAL BOLT M5X15 | 8 | 8 | 8 | | | | | | | | |
| 2 | 12039615 | SOPORTE MOTOR | SOPORTE MOTOR | 2 | 2 | 2 | | | | | | | | |
| 3 | 12039529 | SOPORTE LIMITADOR CAMARA | LIMITER BRACKET CAMERA | 1 | 1 | 1 | | | | | | | | |
| | 12009868 | ARANDELA PLANA INOX 6MM | WASHER FLAT 6 MM INOX. | 2 | 2 | 2 | | | | | | | | |
| | 12010255 | TORNILLO EXAGONAL M6 INOX. | HEXAGONAL SCREW M6 INOX. | 2 | 2 | 2 | | | | | | | | |
| 4 | 12046418 | CUERPO INT. COMPL. ACE 201 | INTERIOR FULL BODY ACE 201 | 1 | _ | _ | | | | | | 01.10.12 | | |
| 4 | 12046418 | CUERPO INT. COMPL. ACE 201 | INTERIOR FULL BODY ACE 201 | 1 | _ | _ | | | | | | | 01.10.12 | |
| 4 | 12046361 | CUERPO INT. COMPL. AE 201 | INTERIOR FULL BODY AE 201 | _ | 1 | _ | | | | | | 01.10.12 | | |
| 4 | 12041107 | CUERPO INT. COMPL. AE 201 | INTERIOR FULL BODY AE 201 | _ | 1 | _ | | | | | | | 01.10.12 | |
| 4 | 12046403 | CUERPO INT. COMPL. 201 APE | INTERIOR FULL BODY 201 APE | _ | _ | 1 | | | | | | 01.10.12 | | |
| 4 | 12043827 | CUERPO INT. COMPL. 201 APE | INTERIOR FULL BODY 201 APE | _ | _ | 1 | | | | | | | 01.10.12 | |
| 5 | 12041767 | SOPORTE SONDA PINCHO CAMARA | CAMERA PROBE SUPP. PINCHO | 1 | 1 | 1 | | | | | | 14,02,13 | | |
| | 12009890 | ARANDELA ABANICO A5 A.304 | FAN SHAPED WASHER A.5 | 1 | 1 | 1 | | | | | | 14,02,13 | | |
| | 12010284 | TORNILLO EXAGONAL M5 INOX. | HEXAGONAL SCREW M5 INOX. | 1 | 1 | 1 | | | | | | 14,02,13 | | |
| | 12010090 | REMACHE AVINOX Ø4X7,5MM | AVINOX RIVET Ø4X7,5MM | 1 | 1 | 1 | | | | | | 14,02,13 | | |
| 6 | 12024464 | MARCO LAMPARA | LAMP ANCHORING PLATEN | 2 | 2 | 2 | | | | | | | | |
| 6A | 12023532 | JUNTA INTERIOR LAMPARA | LAMP INNER JOINT | 2 | 2 | 2 | | | | | | | | |
| 6B | 12023668 | CRISTAL LAMPARA | LAMP GLASS | 2 | 2 | 2 | | | | | | | | |
| 6C | 12023578 | JUNTA EXTERIOR LAMPARA | LAMP OUTER JOINT | 2 | 2 | 2 | | | | | | | | |
| 6D | 12024545 | PORTALAMPARAS | LAMP HOLDER | 2 | 2 | 2 | | | | | | | | |
| 6E | 12025123 | LAMPARA 10W-12V | LIGHT 10W 12V | 2 | 2 | 2 | | | | | | | | |
| 6F | 12010262 | TORNILLO AVELLANADO M4X15 | COUNTERSUNK SCREW M.4x15 | 8 | 8 | 8 | | | | | | | | |
| | | | | | | | | | | | | | | |
| | | | | | | | | | | | | | | |
| | | | | | | | | | | | | | | |
| | | | | | | | | | | | | | | |
| | | | | | | | | | | | | | | |
| | | | | | | | | | | | | | | |
| | | | | | | | | | | | | | | |

| MOD. | HORNOS / OVEN | ZONA / ZONE | MUEBLE INTERIOR / INTERIOR OVEN | PLANO DIAGRAM | C-3024 |
|---|---|---|---|---|---|

| ITEM | CODIGO REFERENCE | DENOMINACION | DENOMINATION | ACE-201 | AE-201 | APE-201 | | | | | | ELIMINADO ELIMINATED | INTRODUCID. INTRODUCED | NOTAS |
|---|---|---|---|---|---|---|---|---|---|---|---|---|---|---|
| 7 | 12020331 | FILTRO DESAGÜE 201 | DRAINAGE FILTER 201 | 1 | 1 | 1 | | | | | | 15.09.13 | | |
| 7 | 12095042 | FILTRO DESAGÜE Ø53 | DRAINAGE FILTER Ø53 | 1 | 1 | 1 | | | | | | | 15.09.13 | |
| **8** | **12126827** | **SOPORTE CORE HOLDER** | **CORE HOLDER SUPPORT** | **1** | **1** | **1** | | | | | | | | |
| 9 | 12039490 | TOPE BANDEJAS 101-102 | TRAY TOP 101-102 | 4 | _ | _ | | | | | | | | |
| **10** | **12126823** | **PORTABANDEJAS IZDA 201 ACE** | **ACE 201 LEFT HOLDER** | **1** | _ | _ | | | | | | | | |
| **10** | **12126822** | **PORTABANDEJAS DCHA 201 ACE** | **ACE 201 RIGHT HOLDER** | **1** | _ | _ | | | | | | | | |
| 11 | 12023935 | PUNTA DIFUSORA LAVADO | WASHING DISPENSER POINT | _ | _ | 1 | | | | | | | | |
| **12** | **12126836** | **CUBREVENTILADOR 201 ADV** | **FAN COVER 201 ADV** | **1** | _ | _ | | | | | | | | |
| **12** | **12126837** | **CUBREVENTILADOR 201 ADV** | **FAN COVER 201 ADV** | _ | **1** | **1** | | | | | | | | |
| 13 | 12041119 | CHAPA REFUERZO CUBA AE 201 | CUBA REINFOR. PLATE AE 201 | 1 | 1 | 1 | | | | | | | | |
| | 12009868 | ARANDELA PLANA INOX 6MM | WASHER FLAT 6 MM INOX. | 7 | 7 | 7 | | | | | | | | |
| | 12010255 | TORNILLO EXAGONAL M6 INOX. | HEXAGONAL SCREW M6 INOX. | 7 | 7 | 7 | | | | | | | | |
| 14 | 12039467 | RECOGEAGUAS HORNO 201 | SPRING WATER COLLE. 201 | 1 | _ | _ | | | | | | | | |
| 15 | 12039498 | TUBO RECOGEAGUAS 101 | COLLECT WATER PIPE 101 | 1 | _ | _ | | | | | | | | |
| | 12009628 | ABRAZADERA ELAST. 26.7-28.1 | SPRING CLAMP 26.7-28.1 | 2 | _ | _ | | | | | | | | |
| 16 | 12043987 | REFUERZO BASE COM. 201 ACE | FULL BASE REINFORC. 201 ACE | 1 | _ | _ | | | | | | | | |
| 16 | 12041105 | REFUERZO BASE COM. 201 ADV | FULL BASE REINFORC. 201 ADV | _ | 1 | 1 | | | | | | | | |
| | 12010090 | REMACHE AVINOX Ø4X7,5 MM | AVINOX Ø4X7,5 MM RIVET | 16 | 16 | 16 | | | | | | | | |
| 17 | 12043392 | TUERCA PATA 202 ADVANCE | NUT LEG 202 ADVANCE | 4 | 4 | 4 | | | | | | | | |
| 18 | 12043393 | TORNILLO PATA 202 ADVANCE | SCREW LEG 202 ADVANCE | 4 | 4 | 4 | | | | | | | | |
| 19 | 12043894 | CAJA CUBRE BOMBA ADV 202 | PUMP CASE COVER ADV202 | _ | _ | 1 | | | | | | | | |
| 20 | 12041104 | BASE EXTERIOR 1201 ADV | EXTERI. BASE 201 ADV | 1 | 1 | 1 | | | | | | | | |
| | | | | | | | | | | | | | | |
| | | | | | | | | | | | | | | |
| | | | | | | | | | | | | | | |
| | | | | | | | | | | | | | | |
| | | | | | | | | | | | | | | |
| | | | | | | | | | | | | | | |
| | | | | | | | | | | | | | | |
| | | | | | | | | | | | | | | |
| | | | | | | | | | | | | | | |

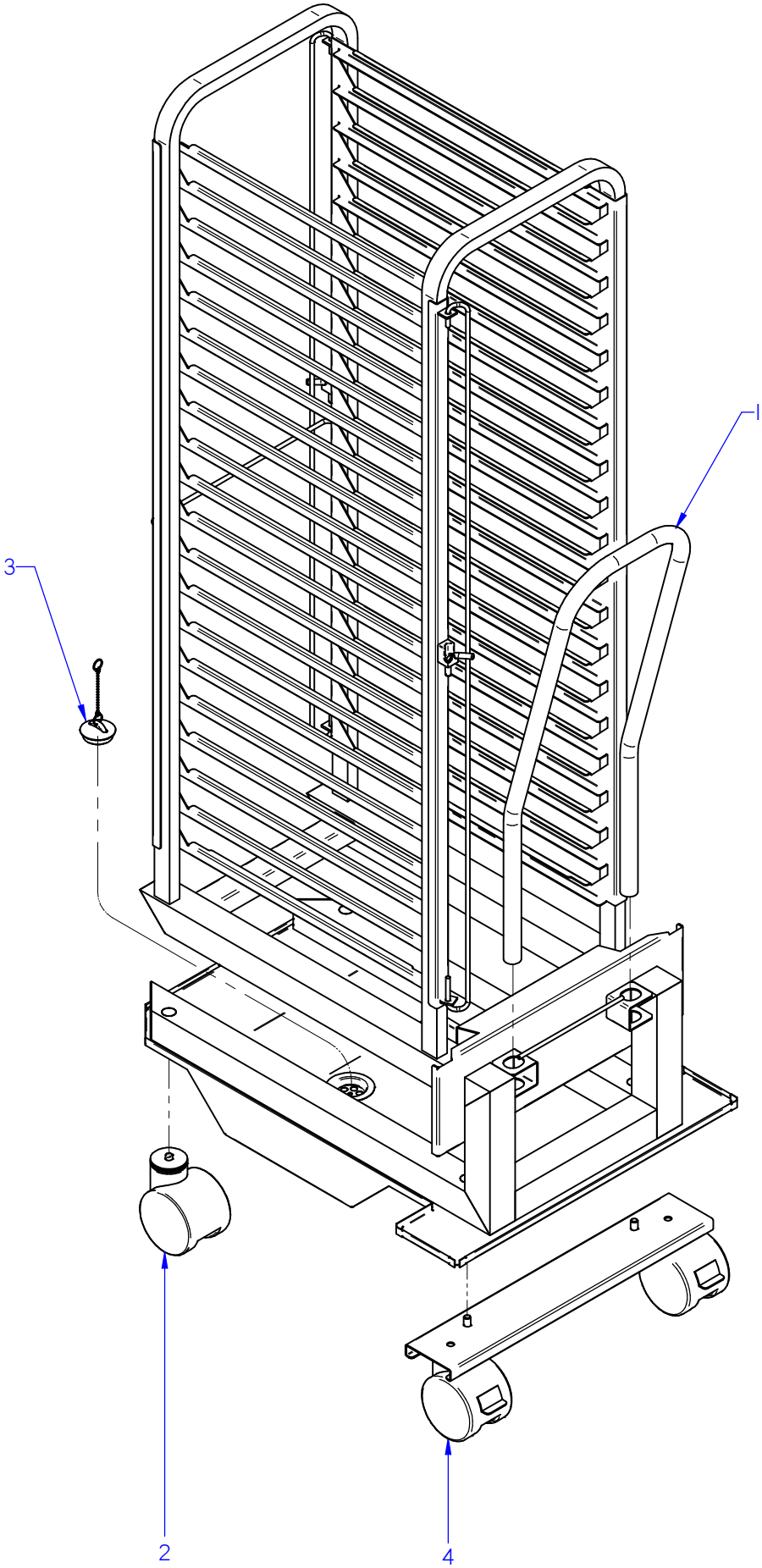


ITEM MARCADO EN COLOR = REPUESTO RECOMENDADO
COLOURED ITEM = RECOMMENDED SPARE PART

| Nº plano / N º plane | Firma | Fecha / Date | Denominación / Denomination: CARRO / TROLLEY | Lamina / Sheet | |
|---|---|---|---|---|---|
| C-3025 | Iban R. | 2015-05 | HORNOS AE; ACE; APE-201 | 4 | Fagor Industrial S.Coop. FAGOR Oñate |

| MOD. | HORNOS / OVEN | ZONA / ZONE | CARRO / TROLLEY | PLANO DIAGRAM | C-3025 |
|---|---|---|---|---|---|

| ITEM | CODIGO REFERENCE | DENOMINACION | DENOMINATION | AE-201 | APE-201 | | | | | | | ELIMINADO ELIMINATED | INTRODUCID. INTRODUCED | NOTAS |
|---|---|---|---|---|---|---|---|---|---|---|---|---|---|---|
| | **12041135** | **CARRO 201 ADVANCE** | **TROLLEY 201 ADVANCE** | **1** | **1** | | | | | | | | | |
| 1 | 12041148 | ASA COMPLETA CARRO 201 ADV | HANDLE FULL 201 ADV | 1 | 1 | | | | | | | | | |
| 2 | 12045315 | RUEDA GIRATORIA SIN FRENO | SWIVEL WHEEL WITHOUT BR. | 2 | 2 | | | | | | | | | |
| 3 | 12024275 | TAPON Ø44 | CAP Ø44 | 1 | 1 | | | | | | | | | |
| **4** | **12045312** | **KIT RUEDA GIRATORIA CON FRENO** | **SWIVEL WHEEL WITH BRAKE KIT** | **1** | **1** | | | | | | | | | |

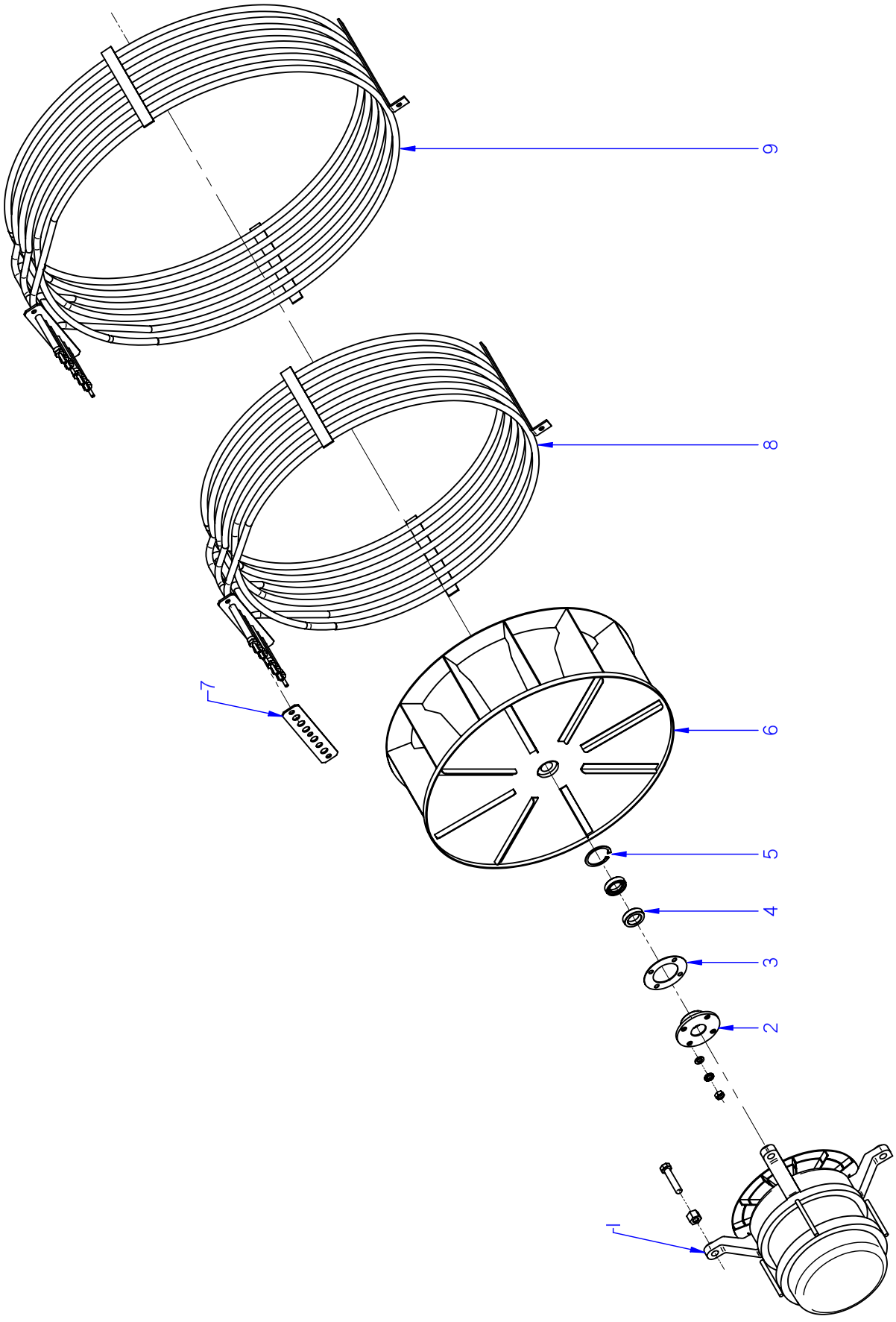


ITEM MARCADO EN COLOR = REPUESTO RECOMENDADO
COLOURED ITEM = RECOMMENDED SPARE PART

| Nº plano / N.º plane | Firma | Fecha / Date | Denominación / Denomination: TURBINA / TURBINE | Lamina / Sheet | |
|---|---|---|---|---|---|
| C-3026 | | 2012-09 | HORNOS AE; ACE; APE-201 | 5 | Fagor Industrial S.Coop. FAGOR Oñate |

| MOD. | HORNOS / OVEN | ZONA / ZONE | TURBINA / TURBINE | PLANO DIAGRAM | C-3026 |
|---|---|---|---|---|---|

| ITEM | CODIGO REFERENCE | DENOMINACION | DENOMINATION | ACE-201 | AE-201 | APE-201 | | | | | | ELIMINADO ELIMINATED | INTRODUCID. INTRODUCED | NOTAS |
|---|---|---|---|---|---|---|---|---|---|---|---|---|---|---|
| 1 | 12024325 | MOTOR 230V AC 3N650KW 1450RP | MOTOR 230V AC 3N650KW 1450 | 2 | 2 | 2 | | | | | | | | |
| S/Nº | 12023560 | DISTANCIADOR MOTOR 10/21 | SPACER MOTOR 10/21 | 8 | 8 | 8 | | | | | | | | |
| | 12010110 | ARANDELA PLANA Fe Zn 8,40MM | WASHER FLAT Fe Zn 8,40MM | 8 | 8 | 8 | | | | | | | | |
| | 12009840 | ARANDELA ABANICO INOX 8MM | FAN SHAPED WASHER NOX 8MM | 8 | 8 | 8 | | | | | | | | |
| | 12010210 | TORNILLO EXAGONAL INOX 8MM | HEXAGONAL SCREW INOX 8MM | 8 | 8 | 8 | | | | | | | | |
| 2 | 12024742 | CASQUILLO RETEN 10/21 | SEAL BUSHING 10/21 | 2 | 2 | 2 | | | | | | | | |
| 3 | 12024221 | JUNTA CASQUILLO RETEN | SEAL BUSHING GASKET | 2 | 2 | 2 | | | | | | | | |
| | 12009868 | ARANDELA PLANA INOX 6MM | WASHER FLAT 6 MM INOX. | 8 | 8 | 8 | | | | | | | | |
| | 12009882 | ARANDELA ABANICO A6 A.304 | FAN SHAPED WASHER A.6 | 8 | 8 | 8 | | | | | | | | |
| | 12010255 | TORNILLO EXAGONAL M6 INOX. | HEXAGONAL SCREW M6 INOX. | 8 | 8 | 8 | | | | | | | | |
| | 12010056 | TORNILLO EXAGONAL M8X40 INOX | HEXAGONAL SCREW M8X40 INO | 8 | 8 | 8 | | | | | | | | |
| 4 | 12024510 | RETEN 17X28X7V | RETAINER 28x17x7 | 4 | 4 | 4 | | | | | | | | |
| 5 | 12010122 | ANILLO DE SEGURIDAD Ø 28X1.2 | SAFETY RING 28x1,2 | 2 | 2 | 2 | | | | | | | | |
| 6 | 12024306 | TURBINA RECTA Ø350X127 HANN. | TURBINE RECTA Ø350X127 HAN | 2 | 2 | 2 | | | | | | | | |
| | 12024190 | ARANDELA SEGURIDAD HANNING | HANNING SAFETY WASHER | 2 | 2 | 2 | | | | | | | | |
| | 12010030 | TORNILLO EXAGONAL M10X20 | HEXAGONAL SCREW M10X20 | 2 | 2 | 2 | | | | | | | | |
| 7 | 12041165 | JUNTA RESIST. CIRCULAR 1/1 ADV | RESIST. CIRCULAR 1/1 ADV SEAL | 4 | 4 | 4 | | | | | | | | |
| 8 | 12039496 | RESIST.CONVECCION INT. 9Kw AD | CONVECTION RESIST. INT. ADV | 2 | 2 | 2 | | | | | | | | |
| 9 | 12039497 | RESIST.CONVECCION EXT. 9Kw AD | RESIST.CONVECCION EXT. ADV | 2 | 2 | 2 | | | | | | | | |
| | 12009868 | ARANDELA PLANA INOX 6MM | WASHER FLAT 6 MM INOX. | 16 | 16 | 16 | | | | | | | | |
| | 12009872 | ARANDELA GROWER INOX 6MM | WASHER GROWER INOX 6MM | 16 | 16 | 16 | | | | | | | | |
| | 12010255 | TORNILLO EXAGONAL M6 INOX. | HEXAGONAL SCREW M6 INOX. | 4 | 4 | 4 | | | | | | | | |
| | 12010232 | ARANDELA LATON M-4 | BRASS WASHER M-4 | 24 | 24 | 24 | | | | | | | | |
| | 12010244 | TUERCA EXAGONAL M4 LATON | BRASS HEXAGONAL NUT M4 | 24 | 24 | 24 | | | | | | | | |
| | | | | | | | | | | | | | | |
| | | | | | | | | | | | | | | |
| | | | | | | | | | | | | | | |
| | | | | | | | | | | | | | | |
| | | | | | | | | | | | | | | |
| | | | | | | | | | | | | | | |
| | | | | | | | | | | | | | | |

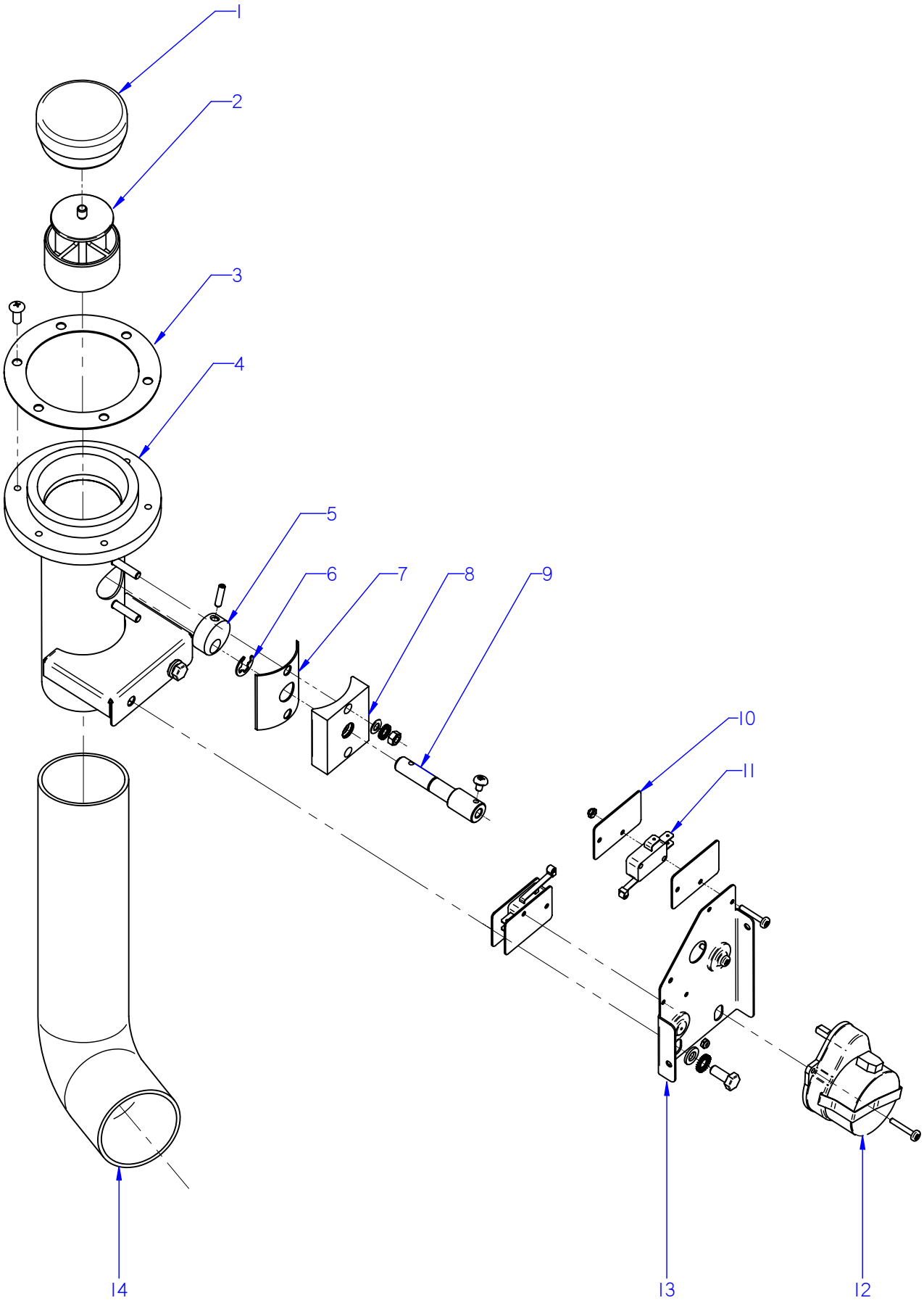


ITEM MARCADO EN COLOR = REPUESTO RECOMENDADO
COLOURED ITEM = RECOMMENDED SPARE PART

| Nº plano / N º plane | Firma | Fecha / Date | Denominación / Denomination: CHIMENEA / FLUEPIPE | Lamina / Sheet | |
|---|---|---|---|---|---|
| C-3027 | | 2012-09 | HORNOS AE; ACE; APE 201 | 6 | Fagor Industrial S.Coop. FAGOR Oñate |

| MOD. | HORNOS / OVEN | ZONA / ZONE | CHIMENEA / FLUEPIPE | PLANO DIAGRAM | C-3027 |
|---|---|---|---|---|---|

| ITEM | CODIGO REFERENCE | DENOMINACION | DENOMINATION | ACE-201 | AE-201 | APE-201 | | | | | | ELIMINADO ELIMINATED | INTRODUCID. INTRODUCED | NOTAS |
|---|---|---|---|---|---|---|---|---|---|---|---|---|---|---|
| 1 | 12024520 | RETENCION DE VAPORES | CLOSE CHIMNEY | 1 | 1 | 1 | | | | | | | | |
| 2 | 12024500 | GUIA RETENCION VAPORES | STEAM RETAINER GUIDE | 1 | 1 | 1 | | | | | | | | |
| 3 | 12023576 | JUNTA BASE CHIMENEA | FLUEPIPE BASE SEAL | 1 | 1 | 1 | | | | | | | | |
| S/Nº | 12095516 | JUNTA TORICA 5x1 | O-RING 5x1 | 6 | 6 | 6 | | | | | | | 17.10.13 | |
| | 12010242 | TORNIL. APLASTADO M5X13 A 304 | FLAT SCREW M.5x13 | 6 | 6 | 6 | | | | | | | | |
| 4 | 12022868 | CONJUNTO CHIMENEA | COMPLETE CHIMNEY | 1 | 1 | 1 | | | | | | 01.05.14 | | |
| 4 | 12104226 | CONJUNTO CHIMENEA | COMPLETE CHIMNEY | 1 | 1 | 1 | | | | | | | 01.05.14 | |
| | 12010126 | REMACHE EXAGONAL M.6 | HEXAGONAL RIVET M.6 | 2 | 2 | 2 | | | | | | | | |
| 5 | 12024328 | LEVA EJE CHIMENEA | FLUEPIPE SHAFT CAM | 1 | 1 | 1 | | | | | | | | |
| | 12010258 | VARILLA ROSCADA M4X16 | THREADED ROD M4X16 | 1 | 1 | 1 | | | | | | | | |
| 6 | 12010014 | ARANDELA DE SEGURIDAD Ø8 | SAFETY WASHER Ø8 | 1 | 1 | 1 | | | | | | | | |
| 7 | 12023497 | JUNTA EJE CHIMENEA | FLUEPIPE SHAFT SEAL | 1 | 1 | 1 | | | | | | | | |
| 8 | 12024436 | GUIA EJE CHIMENEA | FLUEPIPE SHAFT GUIDE | 1 | 1 | 1 | | | | | | 01.05.14 | | |
| 8 | 12098396 | GUIA EJE CHIMENEA | FLUEPIPE SHAFT GUIDE | 1 | 1 | 1 | | | | | | | 01.05.14 | |
| S/Nº | 12010274 | JUNTA TORICA 9.19x2.62 | O-RING 9.19x2.62 | 1 | 1 | 1 | | | | | | | 01.03.13 | |
| | 12009944 | ARANDELA A5 | FLAT WASHER A.5 | 2 | 2 | 2 | | | | | | | | |
| | 12010284 | TUERCA EXAGONAL M5 | HEXAGONAL NUT M.5 | 2 | 2 | 2 | | | | | | | | |
| 9 | 12024435 | EJE CHIMENEA ELECTRICA | ELECTRIC FLUEPIPE SHAFT | 1 | 1 | 1 | | | | | | 01.05.14 | | |
| 9 | 12104228 | EJE CHIMENEA ELECTRICA | ELECTRIC FLUEPIPE SHAFT | 1 | 1 | 1 | | | | | | | 01.05.14 | |
| | 12009876 | TORNILLO ALOMADO M4X6 ZINC. | CURVED SCREW M4X6 ZINC. | 1 | 1 | 1 | | | | | | | | |
| 10 | 12009985 | PLACA SEPARADORA | SPACER PLATE | 4 | 4 | 4 | | | | | | | | |
| | 12010247 | TORNILLO ALOMADO M3X20 | CURVED SCREW M3X20 | 4 | 4 | 4 | | | | | | | | |
| | 12010289 | TUERCA AUTOBLOCANTE M3 | SELF-LOCKING NUT M3 | 4 | 4 | 4 | | | | | | | | |
| 11 | 12025193 | INTERRUPTOR PUERTA | DOOR SWITCH | 2 | 2 | 2 | | | | | | | | |
| 12 | 12024638 | MOTOR CHIMENEA | FLUEPIPE MOTOR | 1 | 1 | 1 | | | | | | | | |
| 13 | 12022146 | ESCUA. AMARRE MOTOR CHIMEN. | FLUEPIPE MOTOR FASTENING BI | 1 | 1 | 1 | | | | | | | | |
| | 12009868 | ARANDELA A6 | WASHER A6 | 2 | 2 | 2 | | | | | | | | |
| | 12009882 | ARANDELA ABANICO A6 A.304 | FAN SHAPED WASHER A.6 | 2 | 2 | 2 | | | | | | | | |
| | 12010186 | TORNILLO EXAGONAL M6X15 A304 | HEXAGONAL SCREW M6X15 | 2 | 2 | 2 | | | | | | | | |
| 14 | 12024122 | TUBO FLEXIBLE Ø53X360 | FLEXIBLE TUBE Ø53X360 | 1 | 1 | 1 | | | | | | | | |
| | 12009962 | ABRAZADERA 40*60 | CLAMP 40*60 | 2 | 2 | 2 | | | | | | | | |

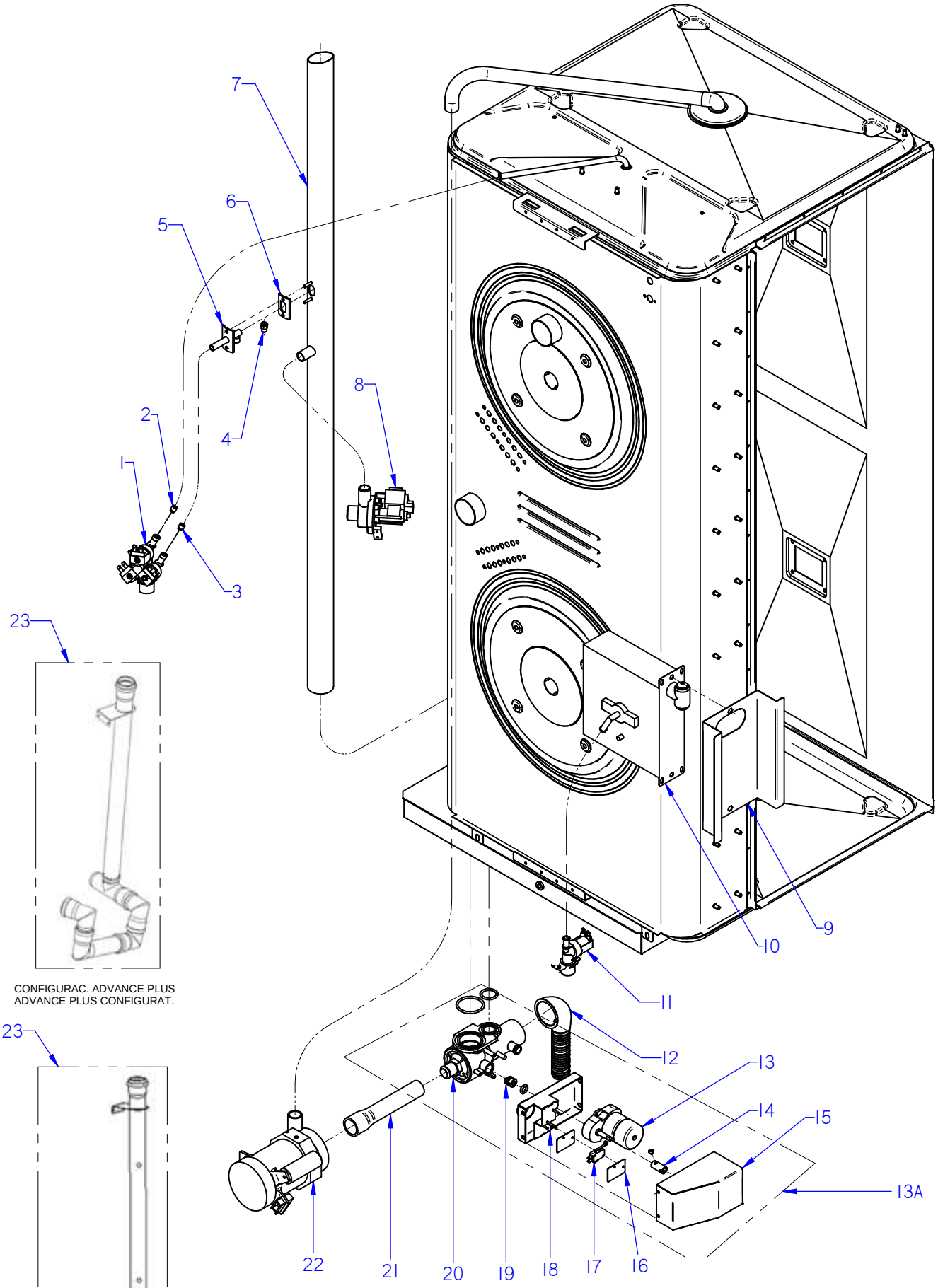




CONFIGURAC. ADVANCE PLUS
ADVANCE PLUS CONFIGURAT.



CONFIGURAC. ADVANCE / CONCEPT
ADVANCE / CONCEPT CONFIGURAT.

ITEM MARCADO EN COLOR = REPUESTO RECOMENDADO
COLOURED ITEM = RECOMMENDED SPARE PART

| Nº plano / N º plane | Firma | Fecha / Date | Denominación / Denomination: CONDUCCIONES DE AGUA / WATER PIPES | Lamina / Sheet | |
|---|---|---|---|---|---|
| C-3028 | | 2012-09 | HORNOS AE; ACE; APE-201 | 7 | Fagor Industrial S.Coop. FAGOR Oñate |

| MOD. | HORNOS / OVEN | ZONA / ZONE | CONDUCCIONES DE AGUA / WATER PIPES | PLANO DIAGRAM | C-3028 |
|---|---|---|---|---|---|

| ITEM | CODIGO REFERENCE | DENOMINACION | DENOMINATION | ACE-201 | AE-201 | APE-201 | | | | | | ELIMINADO ELIMINATED | INTRODUCID. INTRODUCED | NOTAS |
|---|---|---|---|---|---|---|---|---|---|---|---|---|---|---|
| 1 | 12025161 | ELECTRO. 230VAC 50/60Hz 1VIA | SOLENOID VALVE 230VAC 1 V | 2 | _ | _ | | | | | | | | |
| 1 | 12023921 | ELECTR. 230V AC 50/60Hz 3 VIAS A | SOLENOID 230V AC 50/60Hz 3 V | _ | 1 | 1 | | | | | | 01.08.14 | | |
| 1 | 12115418 | ELECTR. 230V AC 50/60Hz 3 VIAS A | SOLENOID 230V AC 50/60Hz 3 V | _ | 1 | 1 | | | | | | | 01.08.14 | |
| 2 | 12024509 | REGULADOR 0,25L. VERDE | REGULATOR 0.25 L. GREEN | 1 | 1 | 1 | | | | | | | | |
| 3 | 12025263 | REGULADOR 1L AMARILLO 255.005 | CONTROLLER YELL. 1L 255,005 | 1 | 1 | 1 | | | | | | 01.12.13 | | |
| 3 | 12096625 | REGULADOR 1 L MARFIL | CONTROLLER 1L IVORY | 1 | 1 | 1 | | | | | | | 01.12.13 | |
| 4 | 12024000 | TOBERA 1/8 | NOZZLE 1/8 | 1 | 1 | 1 | | | | | | 31.03.13 | | |
| 4 | 12049131 | BOQUILLA 1/8M-B-1-3 | INJECTOR 1/8M-B-1-3 | 1 | 1 | 1 | | | | | | | 31.03.13 | |
| 5 | 12039468 | CONDUCC. VAHOS COMPLETO | COMPLETE VAPOUR DUCT | 1 | 1 | 1 | | | | | | | | |
| 6 | 12023605 | JUNTA TUBO INYECTOR | INJECTOR PIPE SEAL | 1 | 1 | 1 | | | | | | | | |
| 7 | 12043995 | CHIMENEA COMPLETA 201 ACE | COMPL. FLUEPIPE 201 ACE | 1 | _ | _ | | | | | | | | |
| 7 | 12041127 | CHIMENEA COMPLETA 201 ADV | COMPLET FLUEPIPE 201 ADV | _ | 1 | 1 | | | | | | | | |
| S/Nº | 12024463 | CONDENSADOR ELEC. 250V VDE | CONDENSER ELEC. 250V VDE | 1 | 1 | 1 | | | | | | | | |
| S/Nº | 11000003 | TUBO SILICONA ALTA Tª Ø53x61 | HIGH SILICON PIPE Tº Ø53x61 | 1 | 1 | 1 | | | | | | 01.01.13 | | |
| S/Nº | 12047901 | EMPALME SILICONA Ø53 | SILICONE JOINT Ø53 | 1 | 1 | 1 | | | | | | | 01.01.13 | |
| | 12007943 | ABRAZADERA ELASTICA 62*66 | ELAST. CLAMP 62*66 | 2 | 2 | 2 | | | | | | | | |
| 8 | 12039546 | MOTOBOMBA 230V AC 1N 50/60Hz | PUMP 230V AC 50/60Hz 30W 1N | _ | 1 | 1 | | | | | | | | |
| | 12009944 | ARANDELA A5 | FLAT WASHER A.5 | _ | 2 | 2 | | | | | | | | |
| | 12009890 | ARANDELA ABANICO A5 A.304 | FAN SHAPED WASHER A.5 | _ | 2 | 2 | | | | | | | | |
| | 12010221 | TORNILLO EXAGONAL M5X15 | HEXAGONAL BOLT M5X15 | _ | 2 | 2 | | | | | | | | |
| | 12010126 | REMACHE EXAGONAL M.6 | HEXAGONAL RIVET M.6 | _ | 2 | 2 | | | | | | | | |
| 9 | 12039369 | SOPORTE DUCHA 202 | SHOWER 202 STAND | _ | 1 | 1 | | | | | | 31.01.14 | | |
| 10 | 12040977 | DUCHA | SHOWER | _ | 1 | 1 | | | | | | | | |
| | 12010267 | ARANDELA 16X6X1.2 A.304 | FLAT WASHER 16X6X1.2 A.304 | _ | 2 | 2 | | | | | | | | |
| | 12009882 | ARANDELA ABANICO A6 A.304 | FAN SHAPED WASHER A.6 | _ | 2 | 2 | | | | | | | | |
| | 12010186 | TORNILLO EXAGONAL M6X15 A304 | HEXAGONAL SCREW M6X15 | _ | 2 | 2 | | | | | | | | |
| 11 | 12025161 | ELECTROVALV. 230VAC 50/60Hz 1V | SOLENOID VALVE 230VAC 1 V | _ | 1 | 1 | | | | | | | | |
| 12 | 12024473 | MANGUERA DESAGUE | DRAIN HOSE | _ | _ | 1 | | | | | | 02.12.12 | | |
| **13A** | **12126816** | **KIT VALVULA DESAGUE ADVAN.** | **VALVE DRAIN ADVANCE KIT** | _ | _ | **1** | | | | | | | **12.07.13** | |
| 13 | 12024754 | MOTORREDUCTOR 230V AC 1N | MOTOREDUCER 230V AC 1N | _ | _ | 1 | | | | | | 02.03.15 | | |
| 13 | 12122403 | MOTORREDUCTOR 230V AC 1N | MOTOREDUCER 230V AC 1N | _ | _ | 1 | | | | | | | 02.03.15 | |

| MOD. | HORNOS / OVEN | ZONA / ZONE | CONDUCCIONES DE AGUA / WATER PIPES | PLANO DIAGRAM | C-3028 |
|---|---|---|---|---|---|

| ITEM | CODIGO REFERENCE | DENOMINACION | DENOMINATION | ACE-201 | AE-201 | APE-201 | | | | | | ELIMINADO ELIMINATED | INTRODUCID. INTRODUCED | NOTAS |
|---|---|---|---|---|---|---|---|---|---|---|---|---|---|---|
| 14 | 12023906 | CASQUILLO MOTOR MICRO | MICRO MOTOR BUSHING | _ | _ | 1 | | | | | | | | |
| | 12009876 | TORNILLO ALOMADO M4X6 H.ZIN. | CURVED SCREW M4X6 H.ZIN. | _ | _ | 2 | | | | | | | | |
| | 12010262 | TORNILLO AVELLANADO M4X15 | COUNTERSUNK SCREW M.4x15 | _ | _ | 2 | | | | | | | | |
| 15 | 12003203 | TAPA SISTEMA LAVADO | TOP WASH SYSTEM | _ | _ | 1 | | | | | | 02.03.15 | | |
| 15 | 12122407 | TAPA SISTEMA LAVADO | TOP WASH SYSTEM | _ | _ | 1 | | | | | | | 02.03.15 | |
| | 12010242 | TORNIL. APLASTADO M5X13 A 304 | FLAT SCREW M.5x13 | _ | _ | 4 | | | | | | | | |
| 16 | 12009985 | PLACA SEPARADORA | SPACER PLATE | _ | _ | 4 | | | | | | | | |
| | 12010247 | TORNILLO ALOMADO M3X20 | CURVED SCREW M3X20 | _ | _ | 7 | | | | | | | | |
| | 12010289 | TUERCA AUTOBLOCANTE M3 | SELF-LOCKING NUT M3 | _ | _ | 7 | | | | | | | | |
| 17 | 12025193 | INTERRUPTOR PUERTA | DOOR SWITCH | _ | _ | 2 | | | | | | | | |
| 18 | 12003183 | SOPORTE MICROS LAVADO | MICROS WASH STAND | _ | _ | 1 | | | | | | 02.03.15 | | |
| 18 | 12122404 | SOPORTE MICROS LAVADO | MICROS WASH STAND | _ | _ | 1 | | | | | | | 02.03.15 | |
| | 12010163 | REMACHE EXAGONAL M.5 | HEXAGONAL RIVET M.5 | _ | _ | 4 | | | | | | | | |
| 19 | 12023796 | PUNTA ACOPLE MOTOR A VALVUL | CONN. POINT MOTOR TO VALVE | _ | _ | 1 | | | | | | | | |
| | 12019645 | JUNTA TORICA Ø10x3.5 | O-RING Ø10X3.5 | _ | _ | 1 | | | | | | | | |
| S/Nº | 12010273 | MANG. SUJEC. 4X14 DIN1481 | CLAMPING SLEEVE 4x14 DIN 1481 | _ | _ | 1 | | | | | | | | |
| 20 | 12024796 | CUERPO VALVULA COMPLETO | COMPLETE VALVE BODY | _ | _ | 1 | | | | | | | | |
| | 12010081 | JUNTA TORICA Ø52X3,5 | O-RING Ø52X3.5 | _ | _ | 1 | | | | | | | | |
| | 12010131 | JUNTA TORICA Ø33x3,5 | O-RING Ø33x3.5 | _ | _ | 1 | | | | | | | | |
| | 12024532 | JUNTA TEFLON VALVULA | TEFLON VALVE BOARD | _ | _ | 2 | | | | | | | | |
| | 12009181 | JUNTA TEFLON VALVULA | TEFLON VALVE BOARD | _ | _ | 2 | | | | | | | | |
| 21 | 12024407 | GOMA VALVULA BOMBA GAS | PUMP VALVE RUBBER | _ | _ | 1 | | | | | | | | |
| | 12010023 | ABRAZADERA 20-32 | CLAMP 20-32 | _ | _ | 1 | | | | | | | | |
| | 12009997 | ABRAZADERA 25-40 | CLAMP 25-40 | _ | _ | 1 | | | | | | | | |
| 22 | 12024782 | MOTOBOMBA 230V AC 1N 50Hz | MOTOR 230V AC 1N 50Hz 74,6 | _ | _ | 1 | | | | | | | | |
| | 12009868 | ARANDELA PLANA INOX 6MM | WASHER FLAT 6 MM INOX. | _ | _ | 2 | | | | | | | | |
| | 12009882 | ARANDELA ABANICO A6 A.304 | FAN SHAPED WASHER A.6 | _ | _ | 2 | | | | | | | | |
| | 12010186 | TORNILLO EXAGONAL M6X15 A304 | HEXAGONAL SCREW M6X15 | _ | _ | 2 | | | | | | | | |
| S/Nº | 12025198 | MANGUERA ENTRADA AGUA | WATER INLET HOSE | 1 | 1 | 1 | | | | | | | | |
| 23 | 12047404 | MOD CONJUNTO DESAGUE ADV | ADV DRAIN SET MODEL | 1 | 1 | 1 | | | | | | | 03,12,12 | |
| | | | | | | | | | | | | | | |

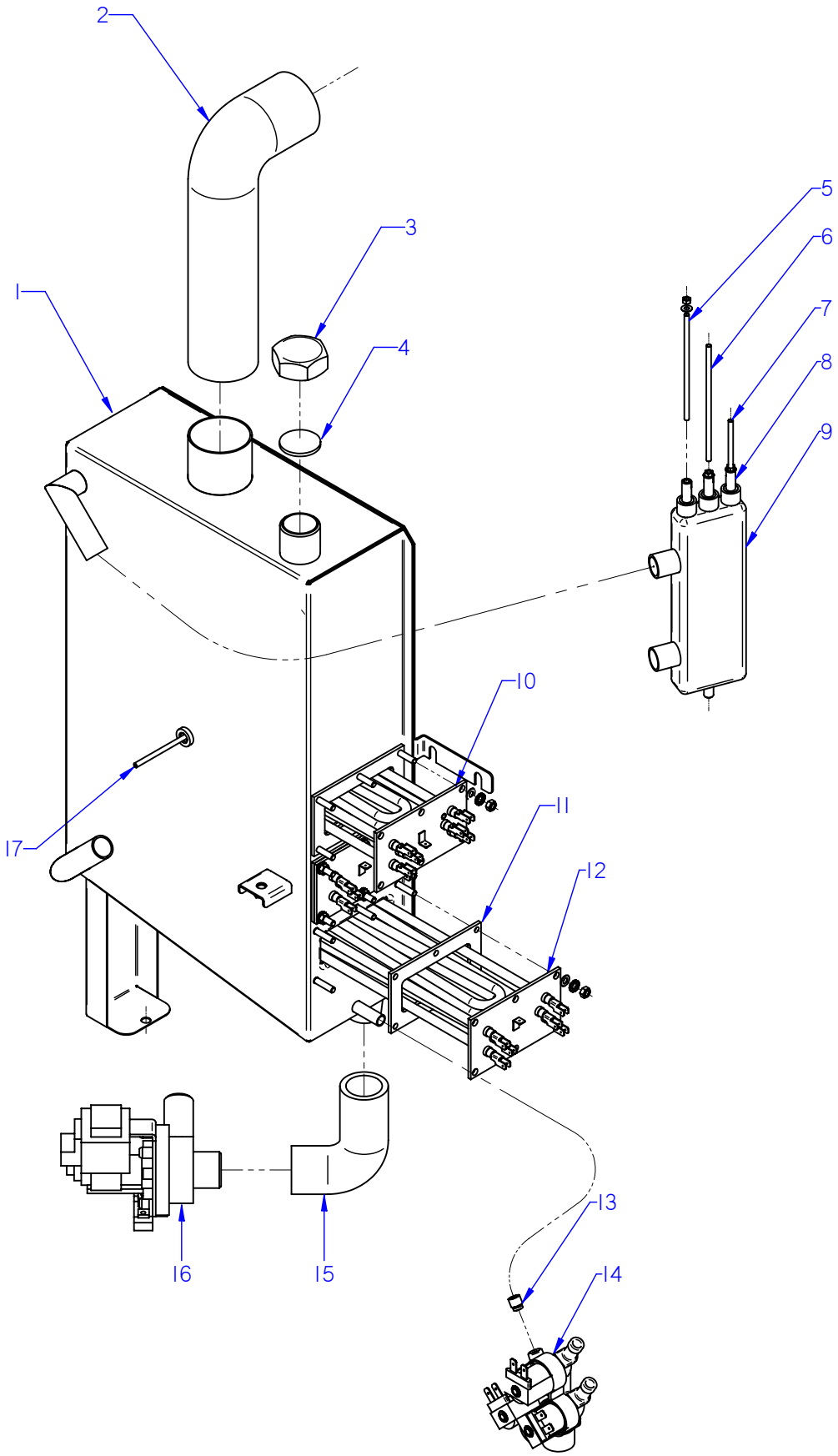


ITEM MARCADO EN COLOR = REPUESTO RECOMENDADO
COLOURED ITEM = RECOMMENDED SPARE PART

| Nº plano / N º plane | Firma | Fecha / Date | Denominación / Denomination: CIRCUITO DE VAPOR / STEAM CIRCUIT | Lamina / Sheet | |
|---|---|---|---|---|---|
| C-3029 | | 2012-09 | HORNOS AE-201; APE-201 | 8 | Fagor Industrial S.Coop. FAGOR Oñate |

| MOD. | HORNOS / OVEN | ZONA / ZONE | CIRCUITO DE VAPOR / STEAM CIRCUIT | PLANO DIAGRAM | C-3029 |
|---|---|---|---|---|---|

| ITEM | CODIGO REFERENCE | DENOMINACION | DENOMINATION | AE-201 | APE-201 | | | | | | | ELIMINADO ELIMINATED | INTRODUCID. INTRODUCED | NOTAS |
|---|---|---|---|---|---|---|---|---|---|---|---|---|---|---|
| **1** | **12046053** | **KIT GENERADOR VAPOR 102-201** | **STEAM GENERATOR 102-201 KIT** | **1** | **1** | | | | | | | | | |
| S/Nº | 11000157 | TUBO SILICONA Tº Ø 26*18 | HIGH SILICON PIPE Tº Ø 26*18 | 3 | 3 | | | | | | | | | |
| | 12009628 | ABRAZADERA ELASTICA 26,7*28,1 | ELAST. CLAMP 26,7*28,1 | 6 | 6 | | | | | | | | | |
| 2 | 12041855 | TUBO FLEXIBLE Ø53X360 VARILLA | FLEXIBLE TUBE Ø53X360 | 1 | 1 | | | | | | | 01.01.13 | | |
| 2 | 12047930 | EMPALME GENERADOR 061 | GENERATOR JOINT 601 | 1 | 1 | | | | | | | | 01.01.13 | |
| S/Nº | 12047901 | EMPALME SILICONA Ø53 | SILICONE JOINT Ø53 | 2 | 2 | | | | | | | | 01.01.13 | |
| | 12009962 | ABRAZADERA 40*60 | CLAMP 40*60 | 2 | 2 | | | | | | | | | |
| 3 | 12009699 | TUERCA TAPON 1" | PLUG NUT 1" | 1 | 1 | | | | | | | | | |
| 4 | 12009884 | ARANDELA Ø32 | WASHER Ø32 | 1 | 1 | | | | | | | | | |
| 5 | 12023573 | ELECTRODO ALTO | HIGH LEVEL ELECTRODE | 1 | 1 | | | | | | | | | |
| 6 | 12023574 | ELECTRODO BAJO | LOW LEVEL ELECTRODE | 1 | 1 | | | | | | | | | |
| 7 | 12023575 | ELECTRODO DE MASA | EARTH ELECTRODE | 1 | 1 | | | | | | | | | |
| | 12009987 | ARANDELA A4 | FLAT WASHER A4 | 3 | 3 | | | | | | | | | |
| | 12009839 | TUERCA EXAGONAL M4 | HEXAGONAL NUT M.4º | 3 | 3 | | | | | | | | | |
| 8 | 12024460 | GUIA AISLANTE | INSULATION GUIDE | 3 | 3 | | | | | | | | | |
| 9 | 12024419 | BOTE DE NIVELES | LEVELS VESSEL | 1 | 1 | | | | | | | 02.06.14 | | |
| 9 | 12113061 | BOTE DE NIVELES INOX | LEVELS VESSEL S.STEEL | 1 | 1 | | | | | | | | 02.06.14 | |
| | 12010044 | TUERCA EXAGONAL M8 PLASTIC | HEXAGONAL NUT M8 PLASTIC | 1 | 1 | | | | | | | | | |
| 10 | 12024752 | RESISTENCIA 3x3000W 230V | RESISTOR 3x3000W 230V | 1 | 1 | | | | | | | | | |
| 11 | 12023680 | JUNTA CIERRE RESISTENCIAS | RESISTOR SEAL | 3 | 3 | | | | | | | | | |
| | 12010284 | TUERCA EXAGONAL M5 | HEXAGONAL NUT M.5 | 18 | 18 | | | | | | | | | |
| 12 | 12024747 | RESISTENCIA 3x3000W | RESISTOR 3x3000W | 2 | 2 | | | | | | | | | |
| 13 | 12096626 | REGULADOR 8 L AZUL | BLUE REGULATOR 8L | 1 | 1 | | | | | | | | 10.11.13 | |
| 14 | 12023921 | ELECTR. 230V AC 50/60Hz 3 VIAS A | SOLENOID 230V AC 50/60Hz 3 V | 1 | 1 | | | | | | | 01.08.14 | | |
| 14 | 12115418 | ELECTR. 230V AC 50/60Hz 3 VIAS A | SOLENOID 230V AC 50/60Hz 3 V | 1 | 1 | | | | | | | | 01.08.14 | |
| S/Nº | 11000083 | T. GOMA NEGRA Ø17*10 | BLACK RUBBER PIPE Ø17*10 | 1 | 1 | | | | | | | | | |
| | 12010036 | ABRAZADERA 12*20 | CLAMP 12-20 | 2 | 2 | | | | | | | | | |
| 15 | 12039649 | TUBO DESAGUE GENERADOR | DRAIN TUBE GENERATOR | 1 | 1 | | | | | | | | | |
| | 12009997 | ABRAZADERA 25*40 | CLAMP 25*40 | 2 | 2 | | | | | | | | | |
| 16 | 12039546 | MOTOBOMBA 230V AC 1N 50/60Hz | PUMP 230V AC 50/60Hz 30W 1N | 1 | 1 | | | | | | | | | |
| 17 | 12023901 | CONJUNTO TERMOPAR VAPOR | STEAM THERMOCOUPLE UNIT | 1 | 1 | | | | | | | | | |

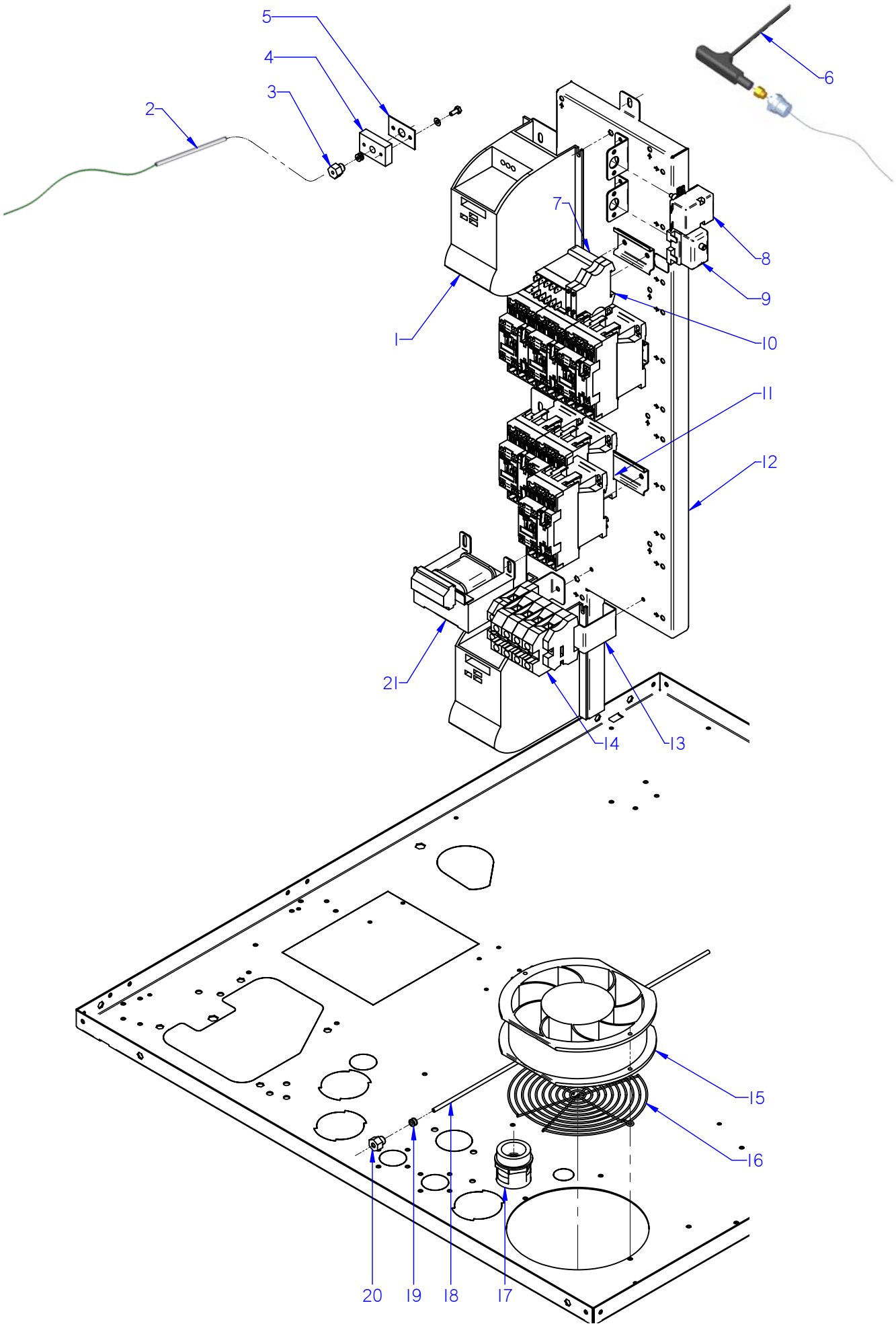


ITEM MARCADO EN COLOR = REPUESTO RECOMENDADO
COLOURED ITEM = RECOMMENDED SPARE PART

| Nº plano / N º plane | Firma | Fecha / Date | Denominación / Denomination: CUADRO ELECTRICO / ELECTRIC PANEL | Lamina / Sheet | |
|---|---|---|---|---|---|
| C-3030 | | 2012-09 | HORNOS AE; ACE; APE-201 | 9 | Fagor Industrial S.Coop. FAGOR Oñate |

| MOD. | HORNOS / OVEN | ZONA / ZONE | CUADRO ELECTRICO / ELECTRIC PANEL | PLANO DIAGRAM | C-3030 |
|---|---|---|---|---|---|

| ITEM | CODIGO REFERENCE | DENOMINACION | DENOMINATION | ACE-201 | AE-201 | APE-201 | | | | | | ELIMINADO ELIMINATED | INTRODUCID. INTRODUCED | NOTAS |
|---|---|---|---|---|---|---|---|---|---|---|---|---|---|---|
| 1 | 12024329 | VARIADOR FRECUENCIA SIE 0,37KW | FREQUENCY VARIATOR SIE 0.37 | 2 | 2 | 2 | | | | | | 26.02.13 | | |
| 1 | 12048798 | REP VARIADOR REGULADO ADV | REGULATED VARIATOR ADV | 2 | 2 | 2 | | | | | | | 26.02.13 | |
| | 12009987 | ARANDELA A4 | FLAT WASHER A.4 | 8 | 8 | 8 | | | | | | | | |
| | 12009928 | ARANDELA ABANICO A4 A.304 | FAN SHAPED WASHER A.4 | 8 | 8 | 8 | | | | | | | | |
| | 12010278 | TORNILLO ALOMADO M4X10 | CURVED SCREW M.4x10 | 8 | 8 | 8 | | | | | | | | |
| | 12009839 | TUERCA EXAGONAL M4 | HEXAGONAL NUT M.4º | 8 | 8 | 8 | | | | | | | | |
| S/Nº | 12024067 | CASQUILLO | BUSHING | 4 | 4 | 4 | | | | | | | 13.05.13 | |
| S/Nº | 12025235 | CONECTOR PASO 3,96MM 8 VIAS | CONNECTOR ROUTES 3,96MM 8 | 1 | 1 | 1 | | | | | | | | |
| 2 | 12024642 | CONJUN. TERMOPAR CAMARA (K) | CHAMBER THERMOCOUPLE UNIT (K) | 1 | 1 | 1 | | | | | | | | |
| 3 | 12023581 | RACORD CIERRE SONDA | PROBE CLOSING ADAPTOR | 1 | 1 | 1 | | | | | | | | |
| S/Nº | 12024247 | BICONO CIERRE SONDA | PROBE CLOSING BICONE | 1 | 1 | 1 | | | | | | | | |
| 4 | 12023737 | BASE CIERRE SONDA | FIXING CORE PROBE | 1 | 1 | 1 | | | | | | | | |
| 5 | 12023504 | JUNTA PASAMUROS SIMPLE | SIMPLE | 1 | 1 | 1 | | | | | | | | |
| | 12009987 | ARANDELA A4 | FLAT WASHER A.4 | 4 | 4 | 4 | | | | | | | | |
| | 12010249 | TORNILLO EXAGONAL M4X10 | HEXAGONAL BOLT M4X10 | 4 | 4 | 4 | | | | | | | | |
| 6 | 12039548 | SONDA PINCHO ADVANCE | ADVANCE PROBE PINCHO | 1 | 1 | 1 | | | | | | | | |
| | 12010110 | ARANDELA Ø 8.4X20X1.5 | FLAT WASHER Ø 8.4X20X1.5 | 1 | 1 | 1 | | | | | | | | |
| | 12040566 | CONTRATUERCA H 1/4" | COUNTERNUT H 1/4" | 1 | 1 | 1 | | | | | | | | |
| 7 | 12024011 | CONTACTOR 230 V. 50-60 HZ | 230 V. 50-60 HZ CONTACTOR | 1 | 1 | 1 | | | | | | | | |
| 8 | 12024591 | TERMOSTATO LIMITADOR 10/21 | LIMITER THERMOSTAT10/21 | 1 | 1 | 1 | | | | | | | | |
| 9 | 12024884 | TERMOSTATO LIMITADOR CORTE | THERMOSTAT LIMITER | _ | 1 | 1 | | | | | | | | |
| S/Nº | 12022001 | SOPORTE TERMOS VAPOR | THERMOSTAT SUPPORT | 2 | 2 | 2 | | | | | | | | |
| | 12023499 | TUERCA M.10x1 EGO 00.00600.075 | NUT M.10x1 EGO 00.00600.075 | 2 | 2 | 2 | | | | | | | | |
| 10 | 12025158 | BORNAS PORTA FUSIBLES | FUSE HOLDER TERMINAL | 2 | 2 | 2 | | | | | | | | |
| S/Nº | 12024152 | FUSIBLE 10A Ø5MM 20X5 | 10A Ø5MM 20X5 FUSE | 2 | 2 | 2 | | | | | | | | |
| 11 | 12041014 | CONTAC. 230V AC 50/60Hz 40A3V | CONTAC. 230V AC 50/60Hz 40A3 | 6 | 6 | 6 | | | | | | | | |
| 12 | 12041726 | CUADRO ELECTRICO 201-202 ADV | ELECTRICAL PANEL 201-202 ADV | 1 | 1 | 1 | | | | | | | | |
| | 12010158 | REMACHE EXAGONAL M.4 | HEXAGONAL RIVET M.4 | 8 | 8 | 8 | | | | | | | | |
| 13 | 12041971 | CHAPA AMARRE CONT. 201 ADV | TIE PLATE CONT. ADV 201 | 1 | 1 | 1 | | | | | | | | |
| | 12009944 | ARANDELA A5 | FLAT WASHER A.5 | 2 | 2 | 2 | | | | | | | | |
| | 12010221 | TORNILLO EXAGONAL M5x15 | HEXAGONAL SCREW M.5x15 | 2 | 2 | 2 | | | | | | | | |

| MOD. | HORNOS / OVEN | ZONA / ZONE | CUADRO ELECTRICO / ELECTRIC PANEL | PLANO DIAGRAM | C-3030 |
|---|---|---|---|---|---|

| ITEM | CODIGO REFERENCE | DENOMINACION | DENOMINATION | ACE-201 | AE-201 | APE-201 | | | | | | ELIMINADO ELIMINATED | INTRODUCID. INTRODUCED | NOTAS |
|---|---|---|---|---|---|---|---|---|---|---|---|---|---|---|
| 14 | 12024420 | BORNA PASO 35MM | GREY PHASE 35 TERMINAL | 3 | 3 | 3 | | | | | | | | |
| | 12025143 | BORNA PASO AZUL 35MM | NEUTRAL TERMINAL 35 BLUE | 1 | 1 | 1 | | | | | | | | |
| | 12024515 | BORNA TIERRA 35MM | EARTH TERMINAL 35mm | 1 | 1 | 1 | | | | | | | | |
| 15 | 12024106 | VENTILADOR 230V AC 1N 50/60Hz 3 | FAN 230V AC 1N 50/60Hz 36KW | 2 | 2 | 2 | | | | | | | | |
| 16 | 12024790 | PROTECCI. VENTILADOR RM-155 | FAN PROTECTION RM-155 | 1 | 1 | 1 | | | | | | | | |
| | 12009882 | ARANDELA ABANICO A6 A.304 | FAN SHAPED WASHER A.6 | 1 | 1 | 1 | | | | | | | | |
| | 12009987 | ARANDELA A4 | FLAT WASHER A.4 | 6 | 6 | 6 | | | | | | | | |
| | 12009928 | ARANDELA ABANICO A4 A.304 | FAN SHAPED WASHER A.4 | 6 | 6 | 6 | | | | | | | | |
| 17 | 12009851 | PRENSA ESTOPAS PG 29 D38 | STUFFING BOX PG 29 D38 | 1 | 1 | 1 | | | | | | | | |
| | 12009973 | CONTRATUERCA GAES | COUNTERNUT GAES | 1 | 1 | 1 | | | | | | | | |
| 18 | 12041634 | CON.TERMOPAR VAPOR KØ4-061 | STEAM THERMOCOUPLE UNIT | 1 | 1 | _ | | | | | | | | |
| 18 | 12044609 | CONJ. TERMOPAR L425 | L425 THERMOCOUPLE UNIT | _ | _ | 1 | | | | | | | | |
| 19 | 12043409 | BICONO CIERRE SONDA Ø4 | PROBE CLOSING BICONE Ø4 | 1 | 1 | 1 | | | | | | | | |
| 20 | 12041049 | RACORD CIERRE SONDA Ø 4 | PROBE CLOSING ADAPTOR Ø 4 | 1 | 1 | 1 | | | | | | | | |
| 21 | 12024173 | TRANSFORMADOR 12-0-12-0,24-0 | TRANSFORMER 12-0-12-0,24-0 | 1 | 1 | 1 | | | | | | | | |
| S/Nº | 12024463 | CONDENSADOR ELEC. 250V VDE | CONDENSER ELEC. 250V VDE | _ | _ | 1 | | | | | | | | |

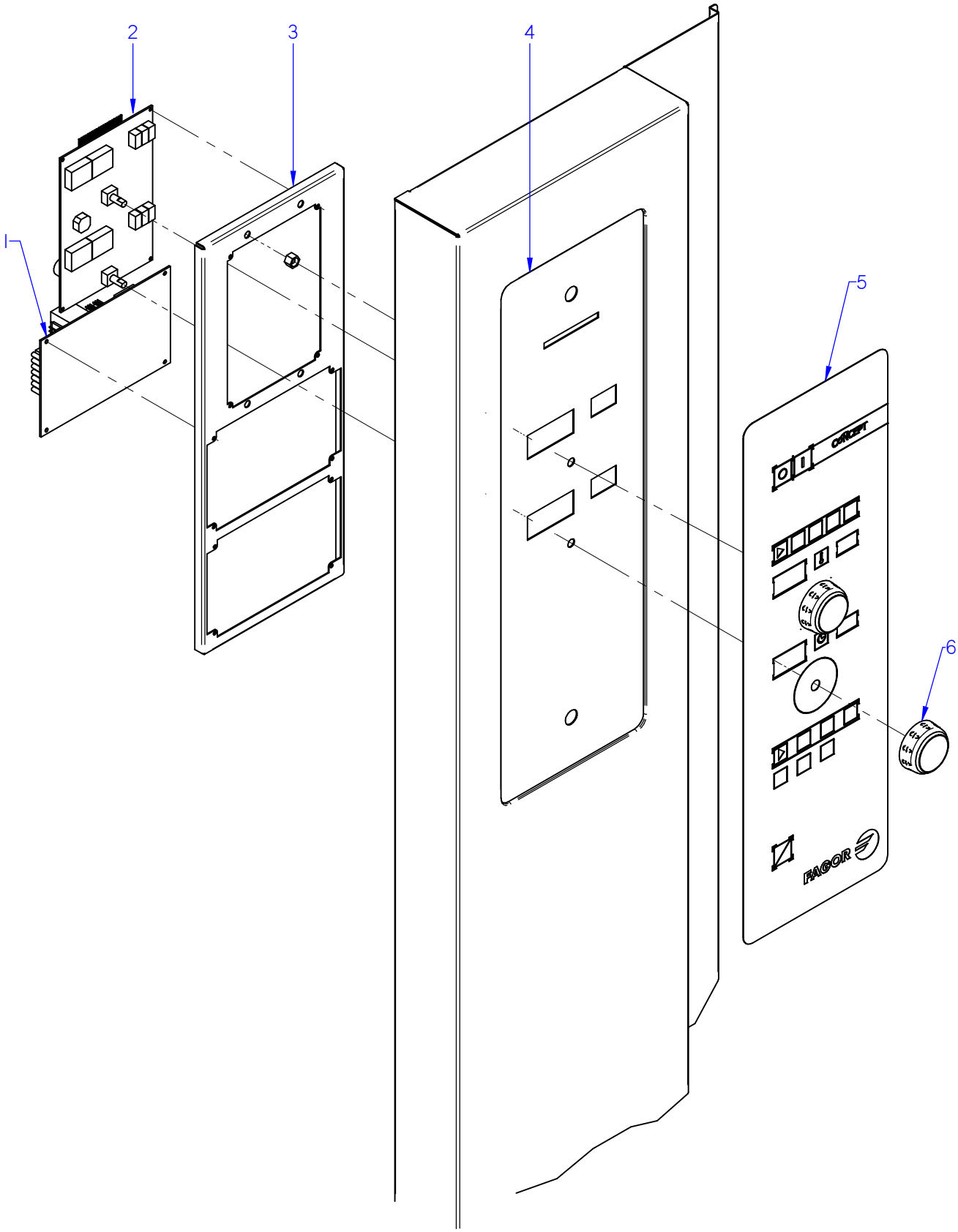


ITEM MARCADO EN COLOR = REPUESTO RECOMENDADO
COLOURED ITEM = RECOMMENDED SPARE PART

| Nº plano / N º plane | Firma | Fecha / Date | Denominación / Denomination: PORTAMANDOS / CONTROL HOLDER | Lamina / Sheet | |
|---|---|---|---|---|---|
| C-3031 | | 2012-09 | HORNOS ACE-201 | 10 | Fagor Industrial S.Coop. Oñate FAGOR |

| MOD. | HORNOS / OVEN | ZONA / ZONE | CONJUNTO ELECTRICO PORTAMANDOS / CONTROL HOLDER ELECTRIC UNIT | PLANO DIAGRAM | C-3031 |
|---|---|---|---|---|---|

| ITEM | CODIGO REFERENCE | DENOMINACION | DENOMINATION | ACE-201 | | | | | | | | ELIMINADO ELIMINATED | INTRODUCID. INTRODUCED | NOTAS |
|---|---|---|---|---|---|---|---|---|---|---|---|---|---|---|
| 1 | 12046659 | CONTROL TARJETA CAM.12V AC . | CARD CONTROL 12V AC 50/60Hz | 1 | | | | | | | | | | |
| 2 | 12046671 | VISUALIZADOR 12V AC 50/60Hz 12D | 12V AC 50/60Hz 12D DISPLAY | 1 | | | | | | | | | | |
| 3 | 12043668 | SOPORTE PROG. CONCEPT ADV | CIRCUIT SUPPO. CONCEPT AD | 1 | | | | | | | | | | |
| 4 | 12093219 | FRENTE PORTAM. CONCEPT | CONTROL PANEL FRONT CONC. | 1 | | | | | | | | | 01.10.13 | |
| S/Nº | 12041815 | JUNTA PORTAMANDOS ADV PLUS | CONTROL PANEL SEAL ADV PLUS | 1 | | | | | | | | | 01.10.13 | |
| 5 | 12044109 | SERIGRAFIA CONCEPT ADVANCE E. | SERIGRAPHY CONCEPT ADVAN | 1 | | | | | | | | | | |
| 6 | 12046201 | BOTON CONCEPT ADV | CONTROL BUTTON CONC. ADV | 2 | | | | | | | | | | |

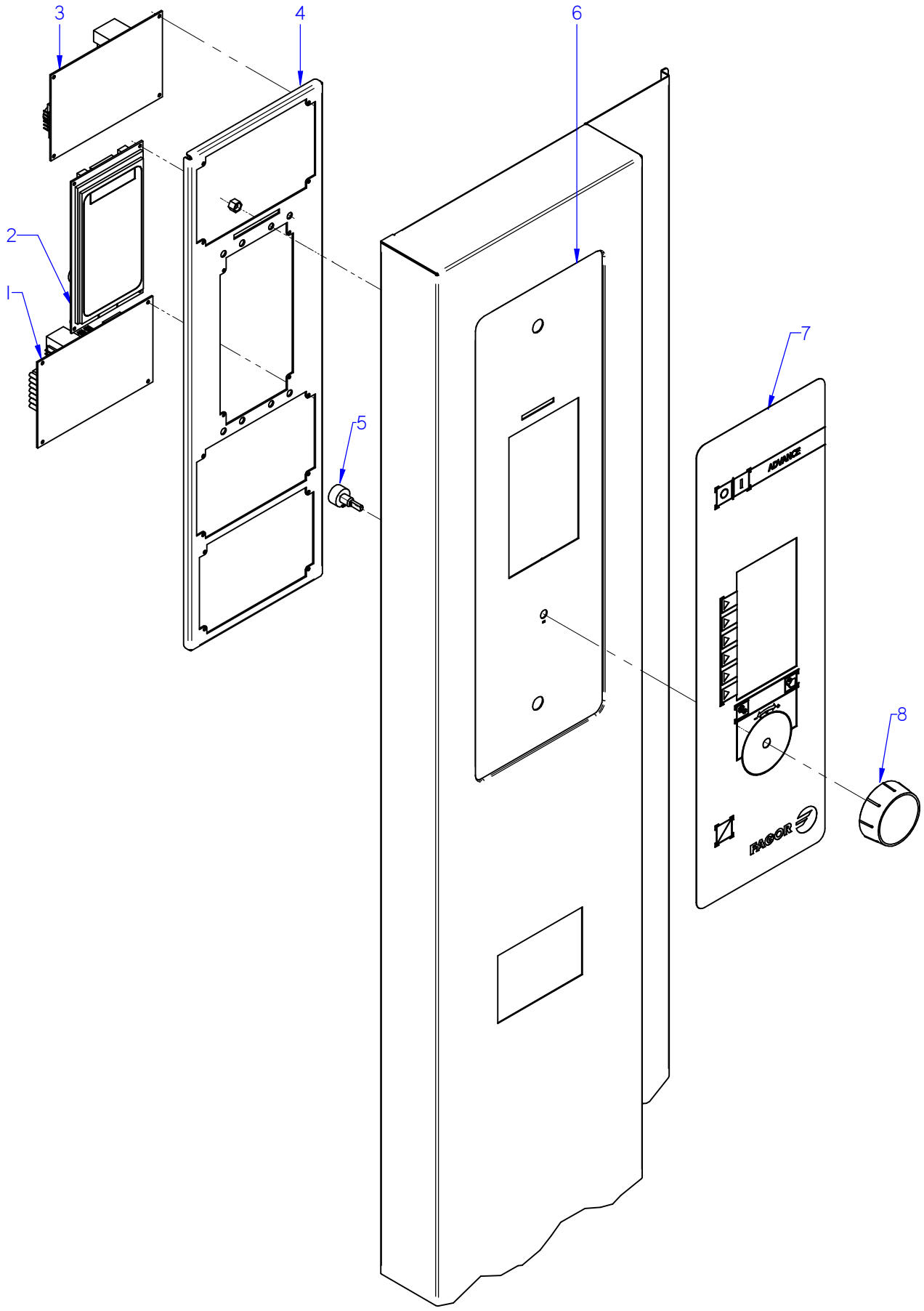


ITEM MARCADO EN COLOR = REPUESTO RECOMENDADO
COLOURED ITEM = RECOMMENDED SPARE PART

| Nº plano / N º plane | Firma | Fecha / Date | Denominación / Denomination: PORTAMANDOS / CONTROL HOLDER | Lamina / Sheet | |
|---|---|---|---|---|---|
| C-3032 | | 2012-09 | HORNOS AE-201 | 11 | Fagor Industrial S.Coop. FAGOR Oñate |

| MOD. | HORNOS / OVEN | ZONA / ZONE | CONJUNTO ELECTRICO PORTAMANDOS / CONTROL HOLDER ELECTRIC UNIT | PLANO DIAGRAM | C-3032 |
|---|---|---|---|---|---|

| ITEM | CODIGO REFERENCE | DENOMINACION | DENOMINATION | AE-201 | | | | | | | | ELIMINADO ELIMINATED | INTRODUCID. INTRODUCED | NOTAS |
|---|---|---|---|---|---|---|---|---|---|---|---|---|---|---|
| 1 | 12046659 | CONTROL TARJETA CAM.12V AC . | CARD CONTROL 12V AC 50/60Hz | 1 | | | | | | | | | | |
| 2 | 12046672 | VISUALIZADOR 12V AC 50/60Hz 32 D | 12V AC 50/60Hz 32 D DISPLAY | 1 | | | | | | | | | | |
| 3 | 12046670 | CONTROL TARJETA CALD. 12V AC 50/6 | CARD CONTROL 12V AC 50/60Hz | 1 | | | | | | | | | | |
| 4 | 12039536 | SOPORTE CIRCUITOS ADVANCE | CIRCUIT SUPPORT ADVANCE | 1 | | | | | | | | | | |
| | 12009944 | ARANDELA A5 | FLAT WASHER A.5 | 4 | | | | | | | | | | |
| | 12010281 | TUERCA EXAGONAL AUT M5 H. ZI. | HEXAGONAL NUT M5 H. ZINC, | 4 | | | | | | | | | | |
| 5 | 12043405 | ENCODER GAMA ADVANCE | ADVANCE RANGE ENCODER | 1 | | | | | | | | | | |
| 6 | 12093236 | FRENTE PORTAM. AE-AG COMP. | CONTROL PANEL FRONT AE-AG | 1 | | | | | | | | | 01.10.13 | |
| S/Nº | 12041815 | JUNTA PORTAMANDOS ADV PLUS | CONTROL PANEL SEAL ADV PLUS | 1 | | | | | | | | | 01.10.13 | |
| 7 | 12044139 | SERIGRAFIA ADVANCE | ADVANCE SERIGRAPHY | 1 | | | | | | | | | | |
| 8 | 12044074 | BOTON DE MANDO ADV | ADV CONTROL BUTTON | 1 | | | | | | | | | | |

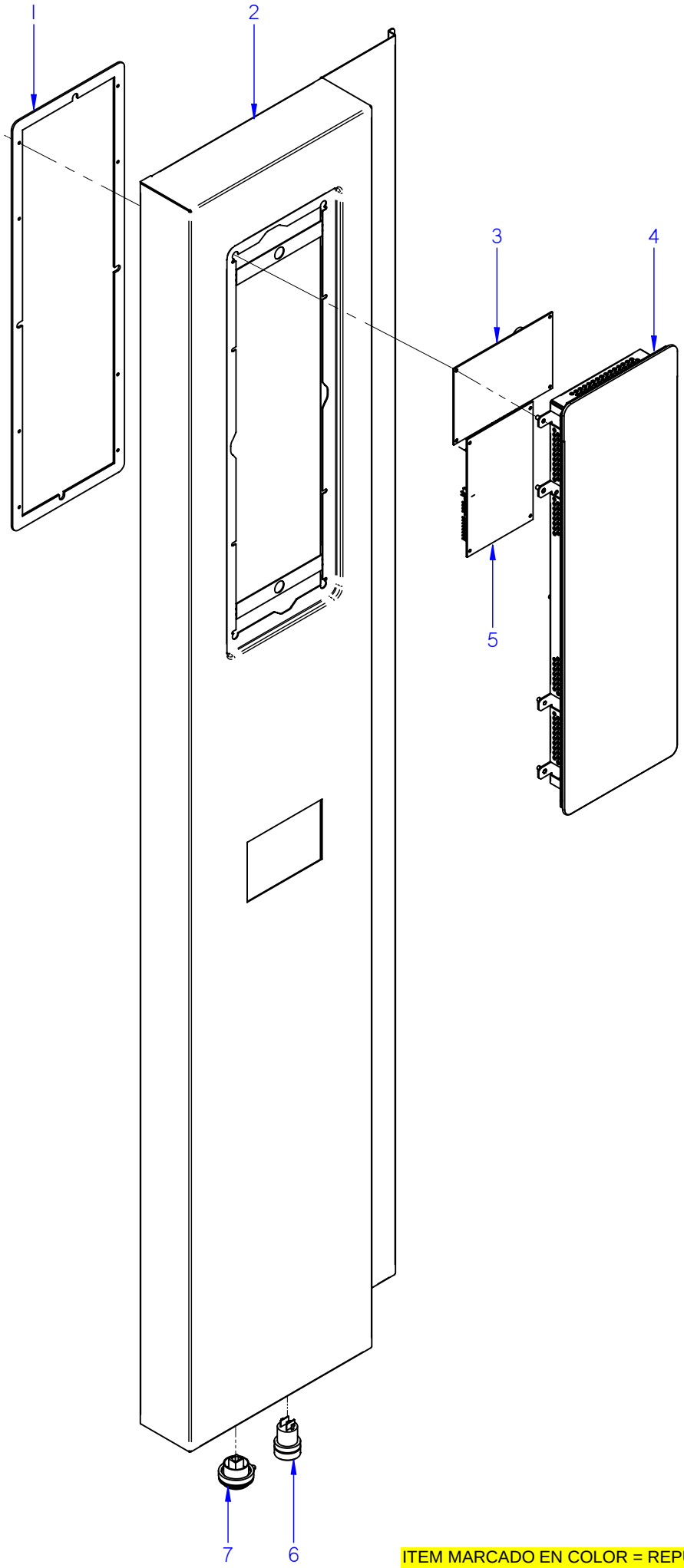


ITEM MARCADO EN COLOR = REPUESTO RECOMENDADO
COLOURED ITEM = RECOMMENDED SPARE PART

| Nº plano / N º plane | Firma | Fecha / Date | Denominación / Denomination: PORTAMANDOS / CONTROL HOLDER | Lamina / Sheet | |
|---|---|---|---|---|---|
| C-3033 | | 2012-09 | HORNOS APE-201 | 12 | Fagor Industrial S.Coop. FAGOR Oñate |

| MOD. | HORNOS / OVEN | ZONA / ZONE | CONJUNTO ELECTRICO PORTAMANDOS / CONTROL HOLDER ELECTRIC UNIT | PLANO DIAGRAM | C-3033 |
|---|---|---|---|---|---|

| ITEM | CODIGO REFERENCE | DENOMINACION | DENOMINATION | APE-201 | | | | | | | | ELIMINADO ELIMINATED | INTRODUCID. INTRODUCED | NOTAS |
|---|---|---|---|---|---|---|---|---|---|---|---|---|---|---|
| 1 | 12041815 | JUNTA PORTAMANDOS ADV PLUS | CONTROL PANEL SEAL ADV PLUS | 1 | | | | | | | | | | |
| | 12010289 | TUERCA AUTOB. M3 DIN985 | SELF-LOCK NUT M3 DIN985 | 6 | | | | | | | | | | |
| | 12010288 | CLIP SUJECIÓN RÁPIDA Ø 4 | RAPID CONNECT CLIP Ø 4 | 12 | | | | | | | | | | |
| 2 | 12043844 | PANEL PORTAMANDOS APE 201 | CONTROL PANEL APE 201 | 1 | | | | | | | | 28.03.14 | | |
| 2 | 12097708 | MOD PORTAMANDO 201 ADV-PL. | CONTROL PANEL 201 ADV-PL. | 1 | | | | | | | | | 28.03.14 | |
| 3 | 12046670 | CONTROL TARJETA CALD. 12V AC 50/6 | CARD CONTROL 12V AC 50/60Hz | 1 | | | | | | | | | | |
| 4 | 12046579 | PLAT ADV PLUS CON SOFTWARE | ADV PLUS SOFTWARE PLATF. | 1 | | | | | | | | 25.05.15 | | |
| 4 | 12121349 | PLAT ADV PLUS CON SOFTWARE | ADV PLUS SOFTWARE PLATF. | 1 | | | | | | | | | 25.05.15 | |
| 5 | 12046659 | CONTROL TARJETA CAM.12V AC . | CARD CONTROL 12V AC 50/60Hz | 1 | | | | | | | | | | |
| 6 | 12023927 | PULSADOR SERIE MICRO | MICRO SWITCH SERIES | 1 | | | | | | | | | | |
| 7 | 12024064 | CONECTOR USB VISUAL PLUS | VISUAL PLUS USB CONNECTOR | 1 | | | | | | | | | | |
| S/Nº | 12023647 | TAPA USB VISUAL PLUS | VISUAL PLUS USB COVER | 1 | | | | | | | | | | |

| MOD. | HORNOS / OVEN | ZONA / ZONE | VARIOS / MISCELLANEOUS | PLANO DIAGRAM | |
|---|---|---|---|---|---|

| ITEM | CODIGO REFERENCE | DENOMINACION | DENOMINATION | ACE-201 | AE-201 | APE-201 | | | | | | ELIMINADO ELIMINATED | INTRODUCID. INTRODUCED | NOTAS |
|---|---|---|---|---|---|---|---|---|---|---|---|---|---|---|
| | 12045296 | MANUAL DE USUARIO ADV CONCE | USER MANUAL ADV CONCEPT | 1 | _ | _ | | | | | | | | |
| | 12044975 | MANUAL DE INSTALACION CONCE | INSTALLATION MANUAL CONCEP | 1 | _ | _ | | | | | | | | |
| | 12045298 | MANUAL DE USUARIO ADVANCE | USER MANUAL ADVANCE | _ | 1 | _ | | | | | | | | |
| | 12044976 | MANUAL DE INSTALACION ADVAN | INSTALLATION MANUAL ADVAN. | _ | 1 | _ | | | | | | | | |
| | 12045299 | MANUAL DE USUARIO ADV PLUS | USER MANUAL ADV PLUS | _ | _ | 1 | | | | | | | | |
| | 12044977 | MANUAL INSTALAC. ADV PLUS E. | INSTALL. MANUAL ADV PLUS E. | _ | _ | 1 | | | | | | | | |
| | 12041777 | ESQUEMA TEORICO ADE | THEORETICAL DIAGRAM ADE | 1 | 1 | 1 | | | | | | | | |
| | 12041895 | PLANO MONTAJE ACE, AE, APE | ASSEMBLY PLAN ACE, AE, APE | 1 | 1 | 1 | | | | | | | | |
| | 12043770 | INSTAL. ELECTRICA ACE 201, 202 | ELEC. INSTALL. ACE 201, 202 | 1 | _ | _ | | | | | | | | |
| | 12041729 | INST. ELECTR. APE, AE, 202, 201 | ELEC. INSTA. APE, AE, 202, 201 | _ | 1 | 1 | | | | | | | | |
| | 12043797 | CABLEADO ACE 20 2 | WIRING ACE 20 2 | 1 | _ | _ | | | | | | | | |
| | 12043793 | CABLEADO FUERZA ACE 20 2 | POWER WIRE ACE 20 2 | 1 | _ | _ | | | | | | | | |
| | 12008538 | CABLEADO FUERZA VE102 | POWER WIRE VE102 | _ | 1 | 1 | | | | | | | | |
| | 12041781 | CABLEA. RESISTENCIAS APE 201 | RESISTOR WIRING APE 201 | _ | 1 | 1 | | | | | | | | |
| | 12024575 | CABLEADO LUZ INTERIOR 20-21 | INTERIOR LIGHT WIRING 20-21 | 1 | 1 | 1 | | | | | | | | |
| | 12023696 | CABLEADO BMF | WIRING BMF | 1 | 1 | 1 | | | | | | | | |
| | 12040567 | CABLEADO LAVADO 201-102-202 | WIRING CABLE 201-102-202 | _ | _ | 1 | | | | | | | | |
| | 12008976 | CABLEADO PULSADOR RESET | RESET BUTTON WIRING | _ | _ | 1 | | | | | | | | |
| | 12023775 | CABLE USB VISUAL PLUS 1,5M | VISUAL PLUS USB CABLE 1,5M | _ | _ | 1 | | | | | | | | |
| | 12009277 | CD HACCP VISUAL COMPLETO | HACCP CD COMPLETE VISUAL | _ | _ | 1 | | | | | | | | |
| | 12022177 | LEYENDA HORNOS | LEGEND OVENS | 1 | 1 | 1 | | | | | | | | |
| | | | | | | | | | | | | | | |
| | | | | | | | | | | | | | | |
| | | | | | | | | | | | | | | |
| | | | | | | | | | | | | | | |
| | | | | | | | | | | | | | | |
| | | | | | | | | | | | | | | |
| | | | | | | | | | | | | | | |
| | | | | | | | | | | | | | | |
| | | | | | | | | | | | | | | |
| | | | | | | | | | | | | | | |

| MOD. | HORNOS / OVEN | ZONA / ZONE | REPUESTOS RECOMENDADOS<br>RECOMMENDED SPARE PART | PLANO<br>DIAGRAM | |
|---|---|---|---|---|---|

| ITEM | CODIGO REFERENCE | DENOMINACION | DENOMINATION | ACE-201 | AE-201 | APE-201 | | | | | | ELIMINADO ELIMINATED | INTRODUCID. INTRODUCED | NOTAS |
|---|---|---|---|---|---|---|---|---|---|---|---|---|---|---|
| **23** | **12097686** | **KIT PUERTA 201 CIERRE UNICO** | **SINGLE LOCK DOOR 201 KIT** | **1** | **1** | **1** | | | | | | | | C-3023-14 |
| **1** | **12041083** | **KIT CRISTAL INTER. 201** | **201 INNER GLASS KIT** | **1** | **1** | **1** | | | | | | | | C-3023-14 |
| 8 | 12039312 | BISAGRA SUPERIOR | UPPER HINGE | 1 | 1 | 1 | | | | | | | | C-3023-14 |
| 13 | 12047967 | BASE BISAGRA INFERIOR 6 DIEN | LOWER HINGE BASE | 1 | 1 | 1 | | | | | | | | C-3023-14 |
| 12 | 12044773 | ASA ADVANCE | ADVANCE HANDLE | 1 | 1 | 1 | | | | | | | | C-3023-14 |
| 13 | 12047967 | BASE BISAGRA INFERIOR 6 DIEN | LOWER HINGE BASE | 1 | 1 | 1 | | | | | | | | C-3023-14 |
| 16 | 12024560 | INTERRUPTOR MAGNETICO AC | MAGNETIC SWITCH AC | 1 | 1 | 1 | | | | | | | | C-3023-14 |
| 21 | 12041134 | JUNTA PUERTA COMPL.201 ADV | DOOR JOINT 201 ADV | 1 | 1 | 1 | | | | | | | | C-3023-14 |
| 22 | 12041088 | JUNTA CIERRE INFERIOR 201 | LOWER LOCK JOINT 201 | 1 | 1 | 1 | | | | | | | | C-3023-14 |
| 1 | 12024325 | MOTOR 230V AC 3N650KW 1450RPM | MOTOR 230V AC 3N650KW 1450 | 2 | 2 | 2 | | | | | | | | C-3026 |
| 4 | 12024510 | RETEN 17X28X7V | RETAINER 28x17x7 | 4 | 4 | 4 | | | | | | | | C-3026 |
| 5 | 12010122 | ANILLO DE SEGURIDAD Ø 28X1.2 | SAFETY RING 28x1,2 | 2 | 2 | 2 | | | | | | | | C-3026 |
| 6 | 12024306 | TURBINA RECTA Ø350X127 HANN. | TURBINE RECTA Ø350X127 HAN | 2 | 2 | 2 | | | | | | | | C-3026 |
| 7 | 12041165 | JUNTA RESIST. CIRCULAR 1/1 ADV | RESIST. CIRCULAR 1/1 ADV SEAL | 4 | 4 | 4 | | | | | | | | C-3026 |
| 8 | 12039496 | RESIST.CONVECCION INT. 9Kw ADV | CONVECTION RESIST. INT. ADV | 2 | 2 | 2 | | | | | | | | C-3026 |
| 9 | 12039497 | RESIST.CONVECCION EXT. 9Kw ADV | RESIST.CONVECCION EXT. ADV | 2 | 2 | 2 | | | | | | | | C-3026 |
| 11 | 12025193 | INTERRUPTOR PUERTA | DOOR SWITCH | 2 | 2 | 2 | | | | | | | | C-3027 |
| 12 | 12024638 | MOTOR CHIMENEA | FLUEPIPE MOTOR | 1 | 1 | 1 | | | | | | | | C-3027 |
| 14 | 12024122 | TUBO FLEXIBLE Ø53X360 | FLEXIBLE TUBE Ø53X360 | 1 | 1 | 1 | | | | | | | | C-3027 |
| 1 | 12025161 | ELECTRO. 230VAC 50/60Hz 1VIA | SOLENOID VALVE 230VAC 1 V | 2 | _ | _ | | | | | | | | C-3028 |
| 1 | 12115418 | ELECTR. 230V AC 50/60Hz 3 VIAS A | SOLENOID 230V AC 50/60Hz 3 V | _ | 1 | 1 | | | | | | | | C-3028 |
| 8 | 12039546 | MOTOBOMBA 230V AC 1N 50/60Hz | PUMP 230V AC 50/60Hz 30W 1N | _ | 1 | 1 | | | | | | | | C-3028 |
| 10 | 12040977 | DUCHA | SHOWER | _ | 1 | 1 | | | | | | | | C-3028 |
| 11 | 12025161 | ELECTROVALV. 230VAC 50/60Hz 1V | SOLENOID VALVE 230VAC 1 V | _ | 1 | 1 | | | | | | | | C-3028 |
| **13A** | **12126816** | **KIT VALVULA DESAGUE ADVAN.** | **VALVE DRAIN ADVANCE KIT** | _ | _ | **1** | | | | | | | | C-3028 |
| 22 | 12024782 | MOTOBOMBA 230V AC 1N 50Hz | MOTOR 230V AC 1N 50Hz 74,6 | _ | _ | 1 | | | | | | | | C-3028 |
| 23 | 12047404 | MOD CONJUNTO DESAGUE ADV | ADV DRAIN SET MODEL | 1 | 1 | 1 | | | | | | | | C-3028 |
| **1** | **12046053** | **KIT GENERADOR VAPOR 102-201** | **STEAM GENERATOR 102-201 KIT** | _ | **1** | **1** | | | | | | | | C-3029 |
| S/Nº | 11000157 | TUBO SILICONA Tº Ø 26*18 | HIGH SILICON PIPE Tº Ø 26*18 | _ | 3 | 3 | | | | | | | | C-3029 |
| | 12009628 | ABRAZADERA ELASTICA 26,7*28,1 | ELAST. CLAMP 26,7*28,1 | _ | 6 | 6 | | | | | | | | C-3029 |
| 2 | 12047930 | EMPALME GENERADOR 061 | GENERATOR JOINT 601 | _ | 1 | 1 | | | | | | | | C-3029 |

| MOD. | HORNOS / OVEN | ZONA / ZONE | REPUESTOS RECOMENDADOS<br>RECOMMENDED SPARE PART | PLANO<br>DIAGRAM | |
|---|---|---|---|---|---|

| ITEM | CODIGO REFERENCE | DENOMINACION | DENOMINATION | ACE-201 | AE-201 | APE-201 | | | | | | ELIMINADO ELIMINATED | INTRODUCID. INTRODUCED | NOTAS |
|---|---|---|---|---|---|---|---|---|---|---|---|---|---|---|
| 5 | 12023573 | ELECTRODO ALTO | HIGH LEVEL ELECTRODE | _ | 1 | 1 | | | | | | | | C-3029 |
| 6 | 12023574 | ELECTRODO BAJO | LOW LEVEL ELECTRODE | _ | 1 | 1 | | | | | | | | C-3029 |
| 7 | 12023575 | ELECTRODO DE MASA | EARTH ELECTRODE | _ | 1 | 1 | | | | | | | | C-3029 |
| 10 | 12024752 | RESISTENCIA 3x3000W 230V | RESISTOR 3x3000W 230V | _ | 1 | 1 | | | | | | | | C-3029 |
| 11 | 12023680 | JUNTA CIERRE RESISTENCIAS | RESISTOR SEAL | _ | 3 | 3 | | | | | | | | C-3029 |
| 12 | 12024747 | RESISTENCIA 3x3000W | RESISTOR 3x3000W | _ | 2 | 2 | | | | | | | | C-3029 |
| 14 | 12115418 | ELECTR. 230V AC 50/60Hz 3 VIAS A | SOLENOID 230V AC 50/60Hz 3 V | _ | 1 | 1 | | | | | | | | C-3029 |
| 15 | 12039649 | TUBO DESAGÜE GENERADOR | DRAIN TUBE GENERATOR | _ | 1 | 1 | | | | | | | | C-3029 |
| 16 | 12039546 | MOTOBOMBA 230V AC 1N 50/60Hz | PUMP 230V AC 50/60Hz 30W 1N | _ | 1 | 1 | | | | | | | | C-3029 |
| 17 | 12023901 | CONJUNTO TERMOPAR VAPOR | STEAM THERMOCOUPLE UNIT | _ | 1 | 1 | | | | | | | | C-3029 |
| 1 | 12048798 | REP VARIADOR REGULADO ADV | REGULATED VARIATOR ADV | 2 | 2 | 2 | | | | | | | | C-3030 |
| 2 | 12024642 | CONJUN. TERMOPAR CAMARA (K) | CHAMBER THERMOCOUPLE UNIT (K) | 1 | 1 | 1 | | | | | | | | C-3030 |
| 6 | 12039548 | SONDA PINCHO ADVANCE | ADVANCE PROBE PINCHO | 1 | 1 | 1 | | | | | | | | C-3030 |
| 8 | 12024591 | TERMOSTATO LIMITADOR 10/21 | LIMITER THERMOSTAT10/21 | 1 | 1 | 1 | | | | | | | | C-3030 |
| 9 | 12024884 | TERMOSTATO LIMITADOR CORTE | THERMOSTAT LIMITER | _ | 1 | 1 | | | | | | | | C-3030 |
| 15 | 12024106 | VENTILADOR 230V AC 1N 50/60Hz 36KV | FAN 230V AC 1N 50/60Hz 36KW | 2 | 2 | 2 | | | | | | | | C-3030 |
| 18 | 12041634 | CON.TERMOPAR VAPOR KØ4-061 | STEAM THERMOCOUPLE UNIT | 1 | 1 | _ | | | | | | | | C-3030 |
| 18 | 12044609 | CONJ. TERMOPAR L425 | L425 THERMOCOUPLE UNIT | _ | _ | 1 | | | | | | | | C-3030 |
| 19 | 12043409 | BICONO CIERRE SONDA Ø4 | PROBE CLOSING BICONE Ø4 | 1 | 1 | 1 | | | | | | | | C-3030 |
| 21 | 12024173 | TRANSFORMADOR 12-0-12-0,24-0 | TRANSFORMER 12-0-12-0,24-0 | 1 | 1 | 1 | | | | | | | | C-3030 |
| S/Nº | 12024463 | CONDENSADOR ELEC. 250V VDE | CONDENSER ELEC. 250V VDE | _ | _ | 1 | | | | | | | | C-3030 |
| 1 | 12046659 | CONTROL TARJETA CAM.12V AC . | CARD CONTROL 12V AC 50/60Hz | 1 | _ | _ | | | | | | | | C-3031 |
| 2 | 12046671 | VISUALIZADOR 12V AC 50/60Hz 12D | 12V AC 50/60Hz 12D DISPLAY | 1 | _ | _ | | | | | | | | C-3031 |
| 5 | 12044109 | SERIGRAFIA CONCEPT ADVANCE E. | SERIGRAPHY CONCEPT ADVAN | 1 | _ | _ | | | | | | | | C-3031 |
| 1 | 12046659 | CONTROL TARJETA CAM.12V AC . | CARD CONTROL 12V AC 50/60Hz | _ | 1 | _ | | | | | | | | C-3032 |
| 2 | 12046672 | VISUALIZADOR 12V AC 50/60Hz 32 D | 12V AC 50/60Hz 32 D DISPLAY | _ | 1 | _ | | | | | | | | C-3032 |
| 3 | 12046670 | CONTROL TARJETA CALD. 12V AC 50/6 | CARD CONTROL 12V AC 50/60Hz | _ | 1 | _ | | | | | | | | C-3032 |
| 5 | 12043405 | ENCODER GAMA ADVANCE | ADVANCE RANGE ENCODER | _ | 1 | _ | | | | | | | | C-3032 |
| 7 | 12044139 | SERIGRAFIA ADVANCE | ADVANCE SERIGRAPHY | _ | 1 | _ | | | | | | | | C-3032 |
| 1 | 12041815 | JUNTA PORTAMANDOS ADV PLUS | CONTROL PANEL SEAL ADV PLUS | _ | _ | 1 | | | | | | | | C-3033 |
| 3 | 12046670 | CONTROL TARJETA CALD. 12V AC 50/6 | CARD CONTROL 12V AC 50/60Hz | _ | _ | 1 | | | | | | | | C-3033 |

| MOD. | HORNOS / OVEN | ZONA / ZONE | REPUESTOS RECOMENDADOS<br>RECOMMENDED SPARE PART | PLANO<br>DIAGRAM | |
|---|---|---|---|---|---|

| ITEM | CODIGO REFERENCE | DENOMINACION | DENOMINATION | ACE-201 | AE-201 | APE-201 | | | | | | ELIMINADO ELIMINATED | INTRODUCID. INTRODUCED | NOTAS |
|---|---|---|---|---|---|---|---|---|---|---|---|---|---|---|
| 4 | 12121349 | PLAT ADV PLUS CON SOFTWARE | ADV PLUS SOFTWARE PLATF. | _ | _ | 1 | | | | | | | | C-3033 |
| 5 | 12046659 | CONTROL TARJETA CAM.12V AC . | CARD CONTROL 12V AC 50/60Hz | _ | _ | 1 | | | | | | | | C-3033 |
| 6 | 12023927 | PULSADOR SERIE MICRO | MICRO SWITCH SERIES | _ | _ | 1 | | | | | | | | C-3033 |
| 7 | 12024064 | CONECTOR USB VISUAL PLUS | VISUAL PLUS USB CONNECTOR | _ | _ | 1 | | | | | | | | C-3033 |
| S/Nº | 12023647 | TAPA USB VISUAL PLUS | VISUAL PLUS USB COVER | _ | _ | 1 | | | | | | | | C-3033 |
| 8 | 12039312 | BISAGRA SUPERIOR | UPPER HINGE | 1 | 1 | 1 | | | | | | | | C-3023 |

APE 06 1, APE 10 1, APE 10 2, APE 20 1, APE 20 2
AE 06 1, AE 10 1, AE 10 2, AE 20 1, AE 20 2
ACE 06 1, ACE 10 1, ACE 10 2, ACE 20 1, ACE 20 2

| | |
|---|---|
| Mod. 101 | RC2=3x3KW |
| Mod. 201 | RC2=3x6KW |
| Mod. 102 | RC2=3x5KW |
| Mod. 202 | RC2=6x5KW |

| | |
|---|---|
| Mod. 061, 101 | RC1=3x3KW |
| Mod. 201 | RC1=3x6KW |
| Mod. 102 | RC1=3x5KW |
| Mod. 202 | RC1=6x5KW |

| | | |
|---|---|---|
| Mod. VPE, VE, | Mod. 061, 101 | RV1=3x3KW |
| | Mod. 201, 102 | RV1=6x3KW |
| | Mod. 202 | RV1=9x3KW |
| | Mod. 101, 102, 201 | RV2=3x3KW |
| | Mod. 202 | RV2=9x3KW |

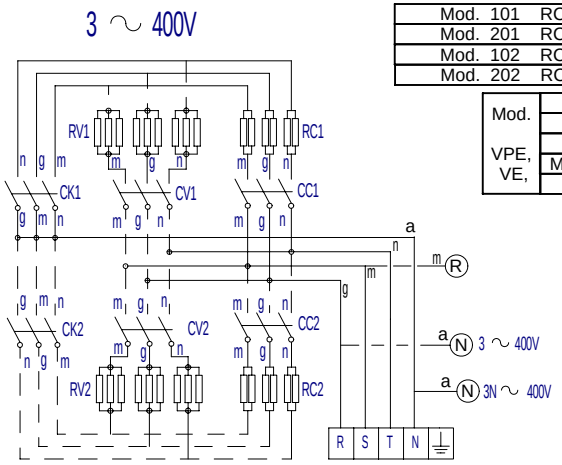


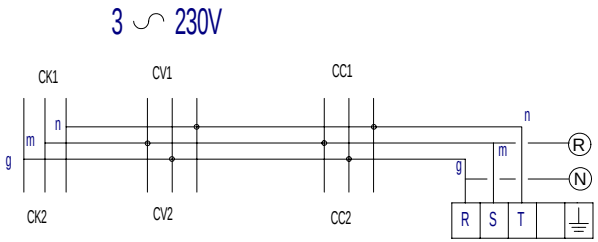


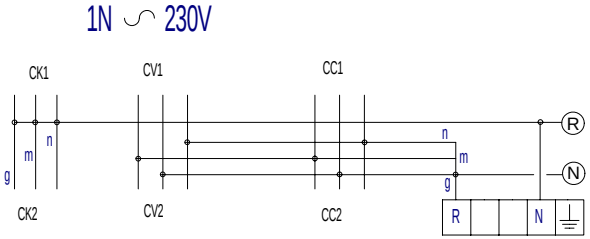


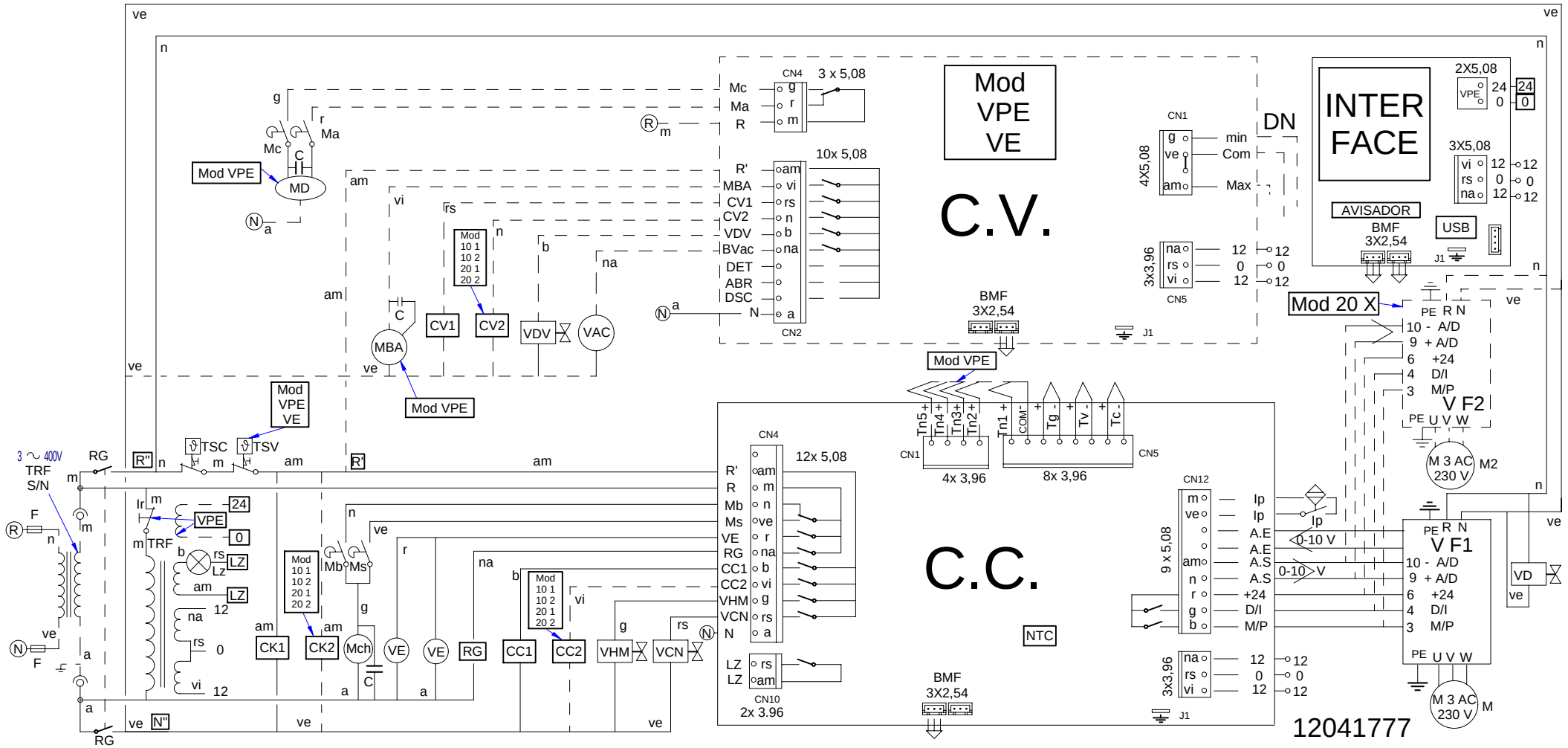

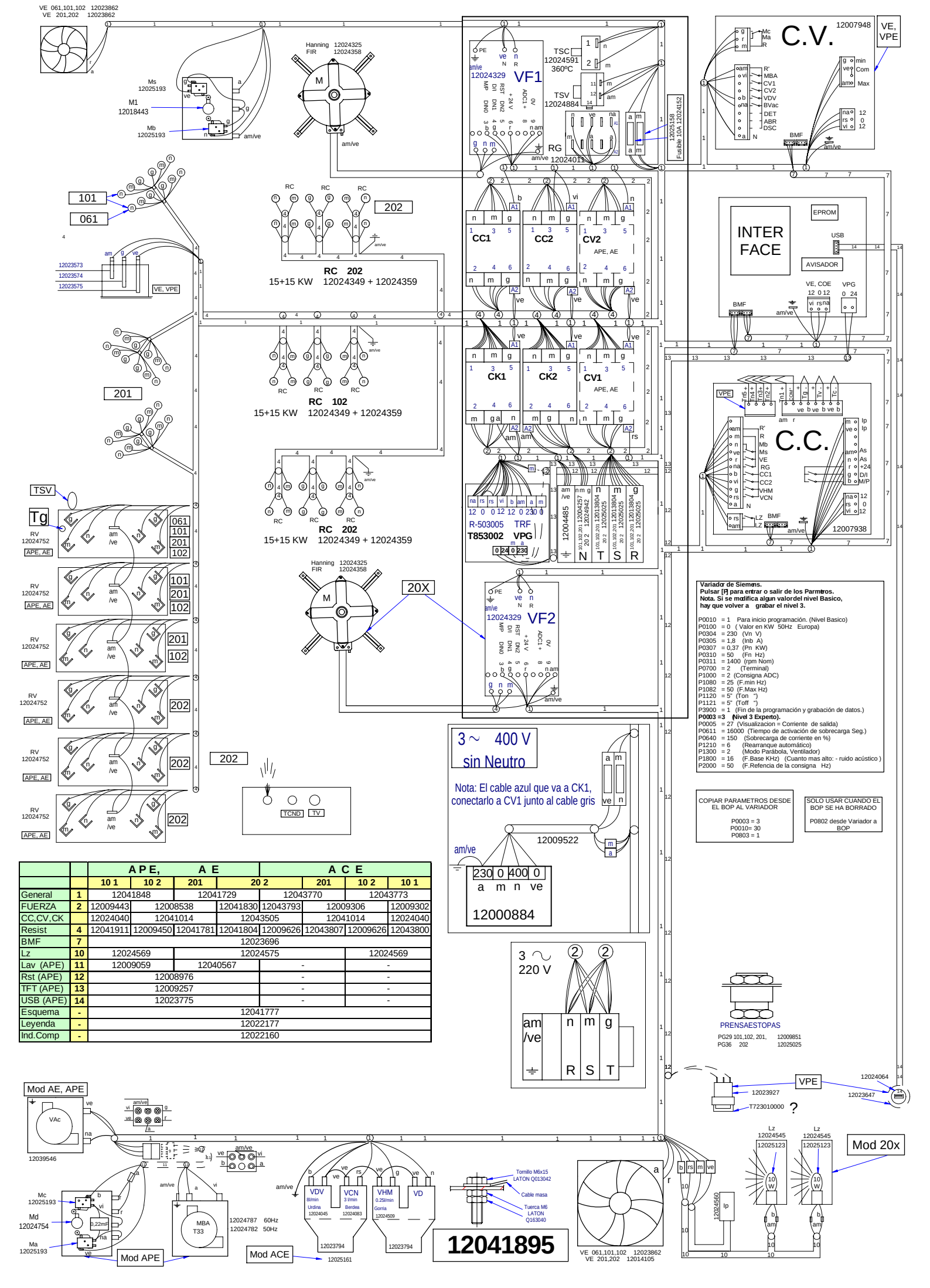


| | | APE, | | | A E | | ACE | | |
|---|---|---|---|---|---|---|---|---|---|
| | | 10 1 | 10 2 | 201 | 20 2 | 201 | 10 2 | 10 1 |
| General | 1 | 12041848 | | 12041729 | | 12043770 | | 12043773 | |
| FUERZA | 2 | 12009443 | 12008538 | | 12041830 | 12043793 | 12009306 | | 12009302 |
| CC,CV,CK | | 12024040 | 12041014 | | 12043505 | 12041014 | | | 12024040 |
| Resist | 4 | 12041911 | 12009450 | 12041781 | 12041804 | 12009626 | 12043807 | 12009626 | 12043800 |
| BMF | 7 | 12023696 | | | | | | | |
| Lz | 10 | 12024569 | | | 12024575 | | | | 12024569 |
| Lav (APE) | 11 | 12009059 | | 12040567 | | - | | - | |
| Rst (APE) | 12 | 12008976 | | | | - | | - | |
| TFT (APE) | 13 | 12009257 | | | | - | | - | |
| USB (APE) | 14 | 12023775 | | | | - | | - | |
| Esquema | - | 12041777 | | | | | | | |
| Leyenda | - | 12022177 | | | | | | | |
| Ind.Comp | - | 12022160 | | | | | | | |

| APARATO / APPLIANCE | HORNOS / OVENS | ZONA / ZONE | KIT BARCO / SHIP KIT | PLANO DRAWING | |
|---|---|---|---|---|---|

| ITEM | CODIGO REFERENCE | DENOMINACION | DENOMINATION | ACE-061 | AE-061 | APE-061 | ACE-101 | AE-101 | APE-101 | | | ELIMINADO ELIMINATED | INTRODUCID. INTRODUCED | NOTAS |
|---|---|---|---|---|---|---|---|---|---|---|---|---|---|---|
| | 12017293 | TRANSFORMADOR 400/230 V, 2 | TRANSFORMER 400/230 V, 2 | 1 | 1 | 1 | 1 | 1 | 1 | | | | | |
| | 12095128 | CHAPA TRANSFO. BARCO | SHIP TRANSFORMER SHEET | 1 | 1 | 1 | 1 | 1 | 1 | | | | | |
| | 12022528 | GUIA CONTACTOR L-73 | CONTACTOR GUIDE L-73 | 1 | 1 | 1 | 1 | 1 | 1 | | | | | |
| | 12127889 | VARIADOR 400V 50/60Hz 1,10KW U | VARIATOR 400V 50/60Hz 1,10KW U | 1 | 1 | 1 | 1 | 1 | 1 | | | | | |
| | 12023549 | CABLEADO REGL-CONTFE-6-7-8-9 | SOCKET-CONTFE 6-7-8-9 WIRING | 1 | 1 | 1 | 1 | 1 | 1 | | | | | |
| | 12009522 | CABLEADO 400V SIN NEUTRO | 400V WITHOUT NEUTRAL WIRING | 1 | 1 | 1 | 1 | 1 | 1 | | | | | |
| | 12093105 | ESQ. TEORICO APE, AE 400V S/N | TEORICAL SCHEME 400V N/NEUT | 1 | 1 | 1 | 1 | 1 | 1 | | | | | |
| | 12095209 | HOJA INFO TRANSFORM. 400V. S/N | INFO. SHEET TRANSF 400V N/NEU | 1 | 1 | 1 | 1 | 1 | 1 | | | | | |
| | 12004270 | PLANO DE MONTAJE | ASSEMBLY DRAWING | 1 | 1 | 1 | 1 | 1 | 1 | | | | | |

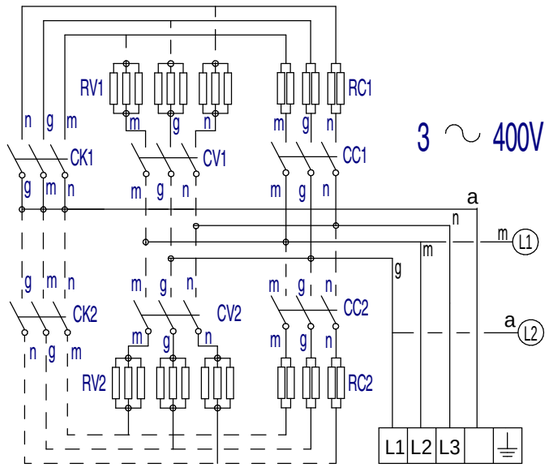


| | |
|---|---|
| Mod. 101 | RC2=3x3KW |
| Mod. 201 | RC2=3x6KW |
| Mod. 102 | RC2=3x5KW |
| Mod. 202 | RC2=6x5KW |

| | |
|---|---|
| Mod. 061, 101 | RC1=3x3KW |
| Mod. 201 | RC1=3x6KW |
| Mod. 102 | RC1=3x5KW |
| Mod. 202 | RC1=6x5KW |

| | | |
|---|---|---|
| Mod. VPE, VE, | Mod. 061, 101 | RV1=3x3KW |
| | Mod. 201, 102 | RV1=6x3KW |
| | Mod. 202 | RV1=9x3KW |
| | Mod. 101, 102, 201 | RV2=3x3KW |
| | Mod. 202 | RV2=9x3KW |

APE 06 1, APE 10 1, APE 10 2, APE 20 1, APE 20 2
AE 06 1, AE 10 1, AE 10 2, AE 20 1, AE 20 2
ACE 06 1, ACE 10 1, ACE 10 2, ACE 20 1, ACE 20 2

# 400 V sin Neutro

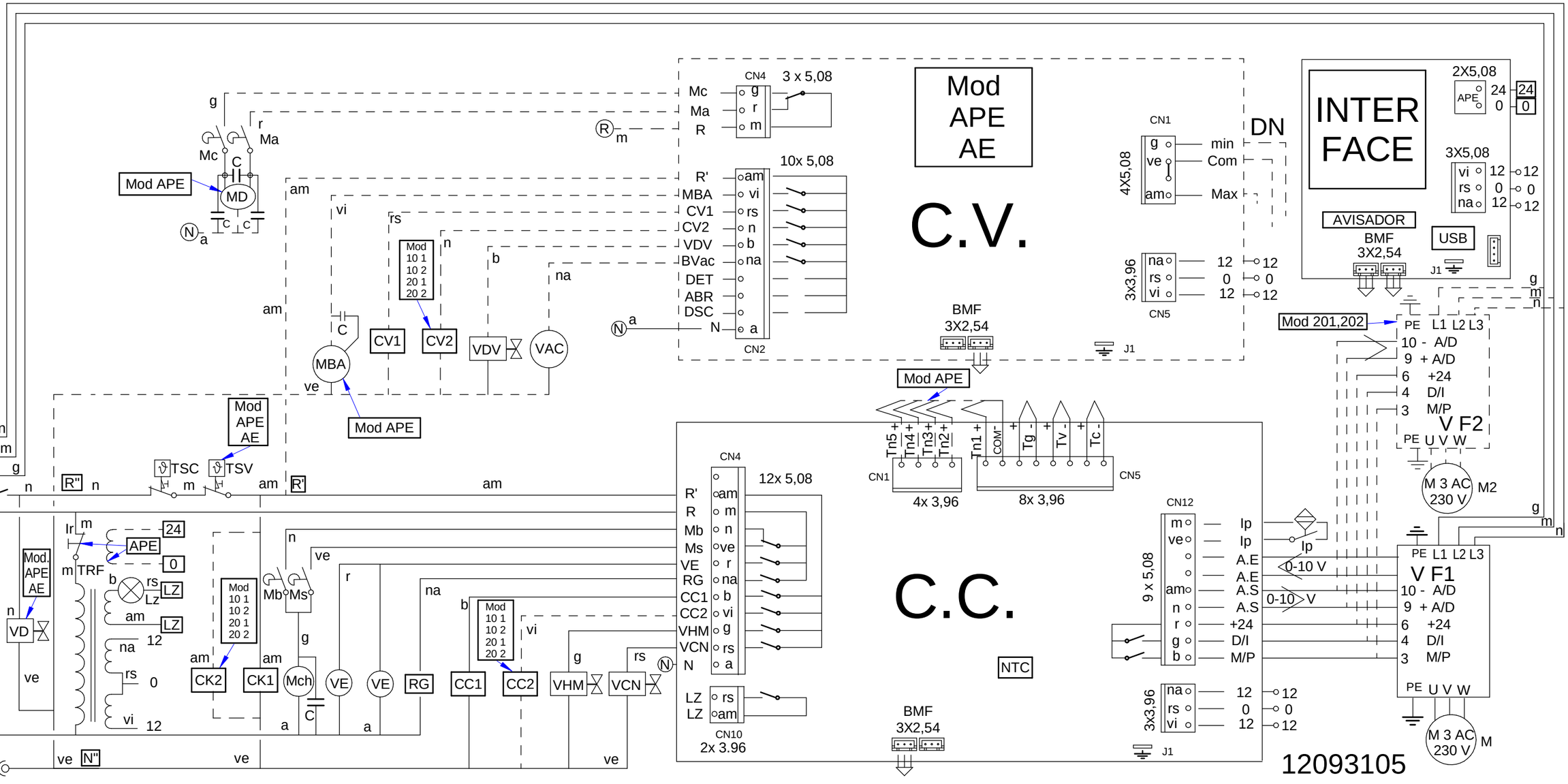

# KIT 400V SIN NEUTRO
# HORNOS ELECTRICOS
# 400V KIT, WITHOUT NEUTRAL
# ELECTRIC OVENS

12004270

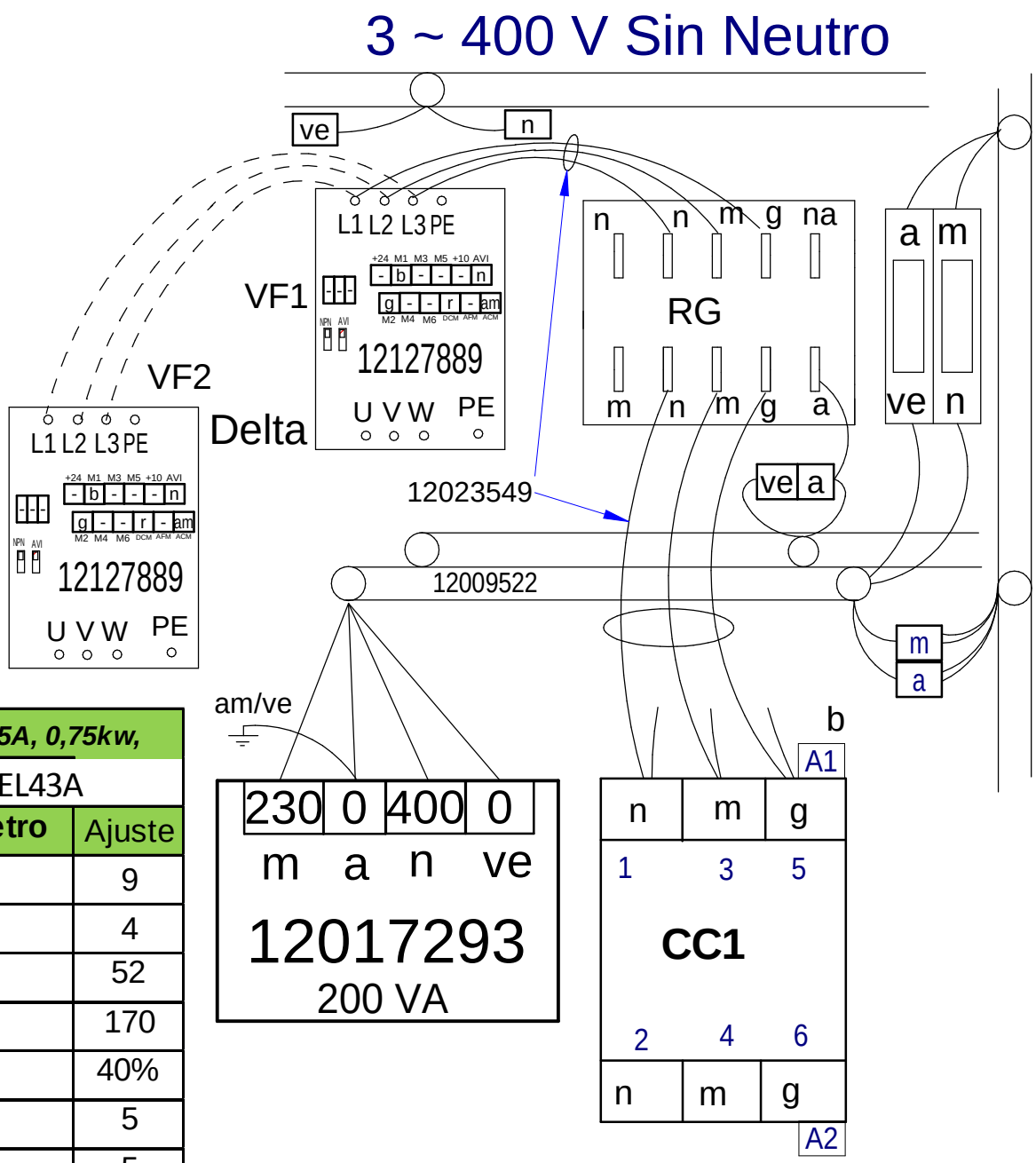


| *400V, 2,5A, 0,75kw,* | |
|---|---|
| VFD007EL43A | |
| **Parámetro** | Ajuste |
| 00.02 | 9 |
| 00.04 | 4 |
| 01-00 | 52 |
| 01-02 | 170 |
| 01-08 | 40% |
| 01-09 | 5 |
| 01-10 | 5 |
| 02.03 | 12 |
| 02.05 | 2 |
| 04.04 | 1 |
| 06-02 | 100% |
| 06-06 | 1 |
| 08.15 | 3 |

## Esquema Electrico 12093105

Nota: El cable azul que va a CK1, conectarlo a CV1 junto al cable gris.

Note: The blue wire that going to CK1, Connect to CV1 with gray wire together.

| | ESPAÑOL | FRANÇAIS | ENGLISH | DEUTSCH | ITALIANO |
|---|---|---|---|---|---|
| BEC | Bujía Encendido Cámara | Bougie Allumage Chambre | Chamber Spark Plug | Zündkerze Einschalten Garraum | Candela di Accensione Camera |
| BEV | Bujía Encendido Caldera | Bougie Allumage Chaudière | Boiler Spark Plug | Zündkerze Einschalten Boile | Candela di Accensione Caldaia |
| C.C. | Control Camara | Contrôle Chambre | Chamber Control | Steuerung Garraum | Controllo Camera |
| C.E.C | Control Combustión Cámara | Contrôle Combustion Chambre | Chamber Combustion Control | Steuerung Verbrennung Garraum | Controllo Combustione Camera |
| C.E.V | Control Combustión Caldera | Contrôle Combustion Chaudière | Boiler Combustion Control | Steuerung Verbrennung Boiler | Controllo Combustione Caldaia |
| C.G. | Control Gas | Contrôle Gaz | Control Gas | Steuern Sie Gas | Controlli il gas |
| C.V. | Control Caldera | Contrôle Chaudière | Boiler Control | Steuerung Boiler | Controllo Caldaia |
| CC1, CC2 | Contactor Resistencia Cámara | Contacteur Élément Chauffant Chambre | Chamber Heating Element Contactor | Schütz Heizwiderstand Garraum | Contattore Resistenza Camera |
| CK1, CK2 | Contactor General Calentamiento | Relais Élément Chauffant | Heating Element Relay | Relais Heizwiderstand | Relè Resistenza |
| CV1, CV2 | Contactor Resistencias Caldera | Contacteur Élément Chauffant Chaudière | Boiler Heating Element Contactor | Schütz Heizwiderstand Boiler | Contattore Resistenza Caldaia |
| DEC | Detector Llama Cámara | Détecteur Flamme Chambre | Chamber Flame Detector | Flammendetektor Garraum | Rilevatore di Fiamma Camera |
| DEV | Detector Llama Caldera | Détecteur Flamme Chaudière | Boiler Flame Detector | Flammendetektor Boiler | Rilevatore di Fiamma Caldaia |
| DN | Detector Nivel Caldera | Détecteur Niveau Chaudière | Boiler Level Detector | Pegeldetektor Boiler | Rilevatore Livello Caldaia |
| F | Fusibles | Fusibles | Fuses | Sicherungen | Fusibili |
| FI | Filtro Interferencias | Filtre Interférences | Interference Filter | Störungsfilter | Filtro Interferenze |
| FM | Térmico Motor | Thermique Moteur | Thermal Engine | Thermoschalter Motor | Termico Motore |
| GV1, GV2 | Electro válvula Gas Cámara | Électrovanne Gaz Chambre | Chamber Gas Solenoid Valve | Elektroventil Gas Garraum | Elettrovalvola Gas Camera |
| GV3, GV4 | Electro válvula Gas Caldera | Électrovanne Gaz Chaudière | Boiler Gas Solenoid Valve | Elektroventil Gas Boiler | Elettrovalvola Gas Caldaia |
| Ip | Interruptor Seguridad Puerta | Interrupteur Sécurité Porte | Door Safety Switch | Sicherheitsschalter Tür | Iterruttore Sicurezza Porta |
| Lz | Luz Interior | Éclairage Intérieur | Inner Light | Innenbeleuchtung | Luce Interna |
| M, M2 | Motor Turbina | Moteur Turbine | Turbine Engine | Motor Turbine | Motore Turbina |
| Ma | Interruptor Micro Abierto | Microrupteur Ouvert | Open Microswitch | Mikroschalter Geöffnet | Iterruttore Micro Aperto |
| Mb | Interruptor Micro Bajada | Microrupteur Descente | Drop Microswitch | Mikroschalter Senken | Iterruttore Micro Discesa |
| Mc | Interruptor Micro Cerrado | Microrupteur Fermé | Closed Microswitch | Mikroschalter Geschlossen | Iterruttore Micro Chiuso |
| Mch | Motor Chimenea | Moteur Cheminée | Stack Engine | Motor Abluftkamin | Motore Canna |
| MD | Motor Desague | Moteur évacuation | Drain Engine | Motor Abfluss | Motore scolo |
| Ms | Interruptor Micro Subida | Microrupteur Montée | Rise Microswitch | Mikroschalter Heben | Iterruttore Micro Salita |
| PF | Potenciómetro Selector Funciones | Potentiomètre Sélecteur Fonctions | Functions Selector Potentiometer | Potentiometer Funktionswahlschalter | Potenziometro Selettore Funzioni |
| RC | Resistencias Cámara | Éléments Chauffants Chambre | Chamber Heating Element | Heizwiderstände Garraum | Resistenze Camere |
| RG | Rele General | Relais Général | Main Relay | Hauptrelais | Relè principale |
| RV | Resistencias Caldera | Éléments Chauffants Chaudière | Boiler Heating Element | Heizwiderstände Boiler | Resistenze Caldaia |
| Tc | Sonda Cámara | Sonde Chambre | Chamber Probe | Sonde Garraum | Sonda Camera |
| TCN | Termostato Condensación | Thermostat Condensation | Condensation Thermostat | Thermostat Kondensierung | Termostato Condensazione |
| Tg | Sonda Caldera | Sonde Chaudière | Boiler Probe | Sonde Boiler | Sonda Caldaia |
| Tn | Sonda Núcleo | Sonde Noyau | Core Probe | Kerntemperaturmessonde | Sonda Nucleo |
| TRF | Transformador | Transformateur | Transformer | Transformator | Trasformatore |
| TSC | Termostato Seguridad Cámara | Thermostat Sécurité Chambre | Chamber Safety Thermostat | Sicherheitsthermostat Garraum | Termostato Sicurezza Camera |
| TSV | Termostato Seguridad Caldera | Thermostat Sécurité Chaudière | Boiler Safety Thermostat | Sicherheitsthermostat Boiler | Termostato Sicurezza Caldaia |
| Tv | Sonda Vapor | Sonde Vapeur | Steam Probe | Sonde Dampf | Sonda Vapore |
| VAC | Bomba Vaciado | Pompe Vidange | Vacuum Pump | Ablasspumpe | Pompa scarico |
| MBA | Moto Bomba Aclarado | Pompe Rinçage | Rinsing Pump | Pumpe Ausspülen | Pompa Risciacquo |
| VC1, VC2 | Ventilador Soplante Camara | Ventilateur Soufflant | Blowing Fan | Ventilator Gebläse | Ventilatore Soffiante |
| VCN | Electro válvula Condensación | Électrovanne Condensation | Condensation Solenoid Valve | Elektroventil Kondensierung | Elettrovalvola Condensazione |
| VDV | Electro válvula Llenado Caldera | Électrovanne Remplissage Chaudière | Chamber Filling Solenoid Valve | Elektroventil Füllung Boiler | Elettrovalvola di Riempimento Caldaia |
| VE | Ventilador Cuadro Eléctrico | Ventilateur Tableau Électrique | Fan Switchboard | Ventilator Elektrotafel | Ventilatore Quadro Elettrico |
| VF1,VF2 | Variador de Frecuencia | Variateur Vitesse | Speed Variator | Geschwindigkeitsregler | Variatore di Velocità |
| VHM | Electro válvula Humidificador | Électrovanne Humidificateur | Humidifier Solenoid Valve | Elektroventil Befeuchtungsvorrichtung | Elettrovalvola Umidificatore |
| Vv | Ventilador Soplante Caldera | Ventilateur soufflement chaudière | Boiler Blowing Fan | Durchbrennenventilator zum Dampfkessel | Ventilatore Soffiante caldaia |
| | **COLORES** | **COULEURS** | **COLOUR** | **FARBEN** | **COLORE** |
| a | Azul | Bleu | Blue | Blau | Blu |
| am | Amarillo | Jaune | Yellow | Gelb | Giallo |
| am/ve | Amarillo/verde | Jaune / vert | Yellow / green | Gelb/grün | Giallo/verde |
| b | Blanco | Blanc | White | Weiß | Bianco |
| g | Gris | Gris | Grey | Grau | Grigio |
| m | Marrón | Marron | Brown | Braun | Marrone |
| n | Negro | Noir | Black | Schwarz | Nero |
| na | Naranja | Orange | Orange | Orange | Arancio |
| r | Rojo | Rouge | Red | Rot | Rosso |
| rs | Rosa | Rose | Pink | Rosa | Roseo |
| ve | Verde | Vert | Green | Grün | Verde |
| vi | Violeta | Violet | Purple | Violett | Viola |
| | | | | | T303042000 |