DESPIECE TECNICO

Lavavajillas de capota
Lave-vaisselle d' capot
Pass-through dishwasher
Durchschub geschirrspüler
Lavastoviglie a cappuccio
Lava-louças de capota

Modelos:

AD-120 HY

Noviembre 2010 November

Revisado Septiembre 2013 September Revised

FAGOR

FAGOR INDUSTRIAL

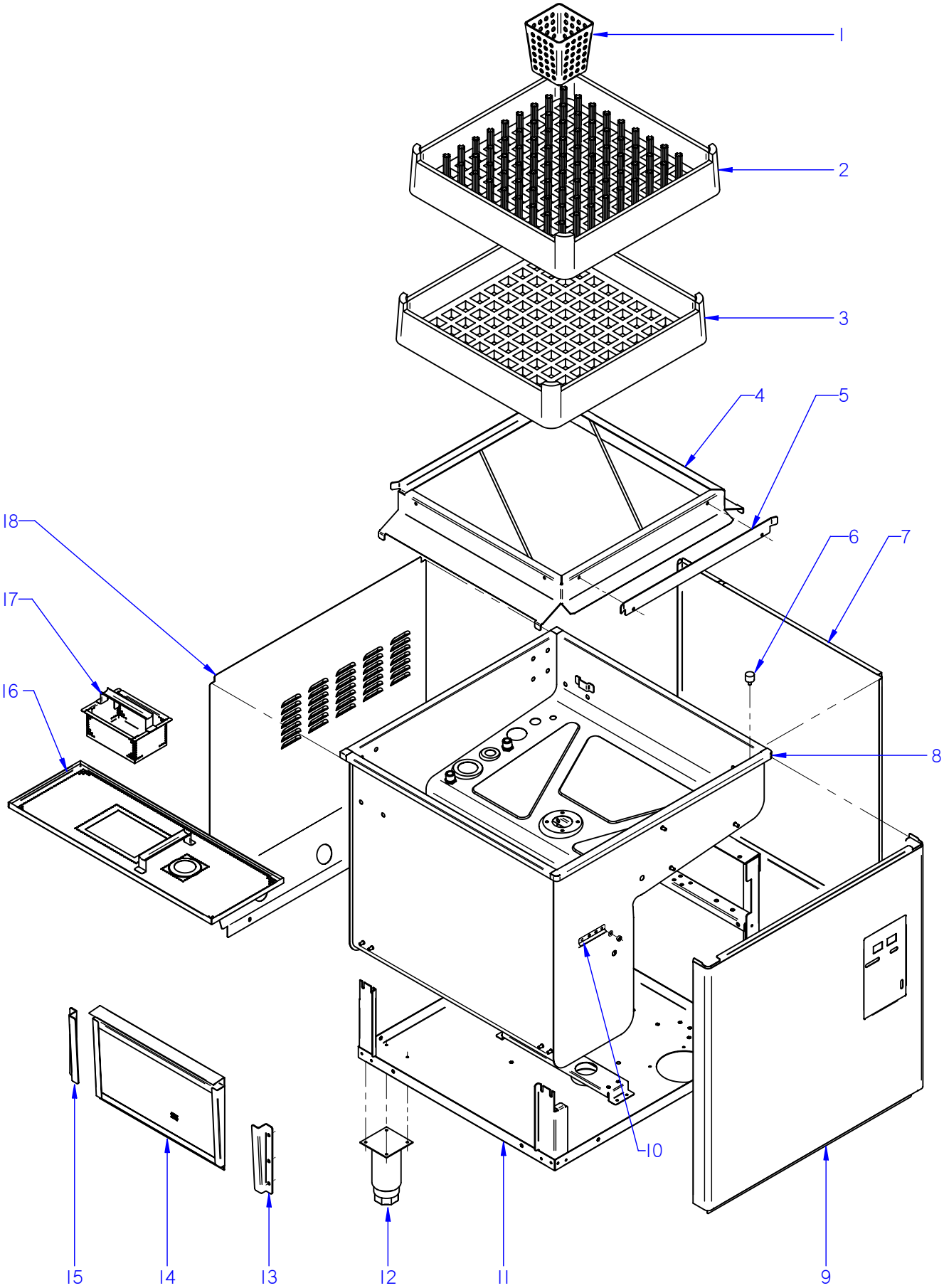

ITEM MARCADO EN COLOR = REPUESTO RECOMENDADO
COLOURED ITEM = RECOMMENDED SPARE PART

N plano	Firma	Fecha	Aparato	MUEBLE / FITTING	Lamina	
C-2716		2010-11	LAVAVAJILLAS AD-120 HY		1	Fagor Industrial S.Coop. FAGOR Oñate

MOD.	LAVAVAJILLAS DE CAPOTA PASS THROUGH DISHWASHER	ZONA / ZONE	MUEBLE / FITTING	PLANO DIAGRAM	C-2716

ITEM	CODIGO CODE	DENOMINACION	NAME	AD-120 HY							NOTAS
1	Z655314000	CESTILLO CUBIERTOS	CUTLERY BASKET	8							
2	Z655302000	CESTILLO PLATOS CP-16-18	PLATE BASKET CP-16-18	2							
3	Z655301000	CESTILLO BASE CT-10	BASE BASKET CT-10	1							
4	Z710377000	BASE CESTILLO COMPLETA	COMPLETE BASKET BASE	1							
5	Z710326000	GUIA CESTILLO	BASKET GUIDE	1							
	Q152004000	TORNILLO APLAST. M5x13 A304	MUSHROOM HEAD BOLT M5x13 A	2							
	Q242030000	ARANDELA ABANICO A5 A.304	FAN WASHER A5 A.304	2							
	Q162030000	TUERCA EXAGONAL M5	HEXAGONAL NUT M5	2							
	Q308000000	ARANDELA DUBO A.8	DUBO A.8 WASHER	14							
6	Z710316000	AMORTIGUADOR	DAMPER	2							
	Q262040000	ARANDELA GROW. A6 A.304	WASHER GROW. A6 A.304	2							
	Q162040000	TUERCA EXAGONAL M6	HEXAGONAL NUT M6	2							
	Q012073000	TORNILLO EXAGONAL M12x20	HEXAGONAL BOLT M12x20	1							
	Q306024000	JUNTA 18x12.2x1.5	SEAL 18x12.2x1.5	1							
	Q162070000	TUERCA EXAGONAL M12	HEXAGONAL NUT M12	1							
7	Z749311000	PANEL LATERAL DERECHO	RIGHT SIDE PANEL	1							
	Q152004000	TORNILLO APLAST. M5x13 A304	MUSHROOM HEAD BOLT M5x13 A	2							
S/Nº	Z749312000	PANEL LATERAL IZQUIERDO	LEFT SIDE PANEL	1							
	Q152004000	TORNILLO APLAST. M5x13 A304	MUSHROOM HEAD BOLT M5x13 A	2							
8	Z717401000	CUBA COMPLETA AD-120	COMPLETE TUB AD-120	1							
	Q232040000	ARANDELA A6	WASHER A6	4							
	Q302022000	ARANDELA 16x6x1.2 A.304	WASHER 16X6X1.2 A.304	4							
	Q262040000	ARANDELA GROW. A6 A.304	WASHER GROW. A6 A.304	8							
	Q162040000	TUERCA EXAGONAL M6	HEXAGONAL NUT M6	8							
S/Nº	Z718951000	PASAMUROS ACLARADO CLINIC	CLINIC RINSE BUSHING	1							
	Z718957000	ARANDELA Ø30X14,25X2,5	WASHER Ø30X14,25X2,5	2							
9	Z712937000	PANEL FRONTAL AD-80-100-120	FRONT PANEL AD-80-100-120	1							
10	Z748008000	SOPORTE BULBO TERMOSTATO	THERMOSTAT BULB SUPPORT	1							
	Q162040000	TUERCA EXAGONAL M6	HEXAGONAL NUT M6	2							
	Q232040000	ARANDELA A6	WASHER A6	2							
	Q262040000	ARANDELA GROW. A6 A.304	WASHER GROW. A6 A.304	2							

MOD.	LAVAVAJILLAS DE CAPOTA PASS THROUGH DISHWASHER	ZONA / ZONE	MUEBLE / FITTING	PLANO DIAGRAM	C-2716

ITEM	CODIGO CODE	DENOMINACION	NAME	AD-120 HY							NOTAS
11	Z718921000	ARMAZON COMPLETO CLINIC	CLINIC COMPLETE FRAME	1							
12	X260151000	PATA REGULABLE	ADJUSTABLE LEG	4							
	Q411304000	REMACHE AVIBULB Ø4,8	AVIBULB RIVET Ø4.8	16							
13	Z710309000	GUIA FILTRO ANTERIOR	FRONT FILTER GUIDE	1							
	Q232040000	ARANDELA A6	WASHER A6	2							
	Q162040000	TUERCA EXAGONAL M6	HEXAGONAL NUT M6	2							
14	Z710907000	FILTRO COMPLETO	COMPLETE FILTER	1							ELIMINADO 18.02.2013
14	12048626	FILTRO	FILTER	1							INTRODUCIDO 18.02.2013
15	Z710310000	GUIA FILTRO POSTERIOR	REAR FILTER GUIDE	1							
	Q232040000	ARANDELA A6	WASHER A6	2							
	Q162040000	TUERCA EXAGONAL M6	HEXAGONAL NUT M6	2							
16	Z710801000	BANDEJA COMPLETA	COMPLETE TRAY	1							
17	Z710804000	RECOGEDOR DESPERDICIOS	WASTE COLLECTION	1							
18	Z742905000	PANEL POSTERIOR FI-80	REAR PANEL FI-80	1							
	3713500000	PERFIL CUBREARISTAS PLASTICO	PLASTIC EDGE COVER PROFILE	3							
	Q152004000	TORNIL, APLASTADO M5x13 A304	FLAT HEADED BOLT M5x13 A304	2							
	Z712911000	TOPE 80x80x20	BUFFER 80x80x20	6							
S/Nº	Z206135000	CHECK LIST LAVAVAJILLAS FAGOR	CHECK LIST	1							

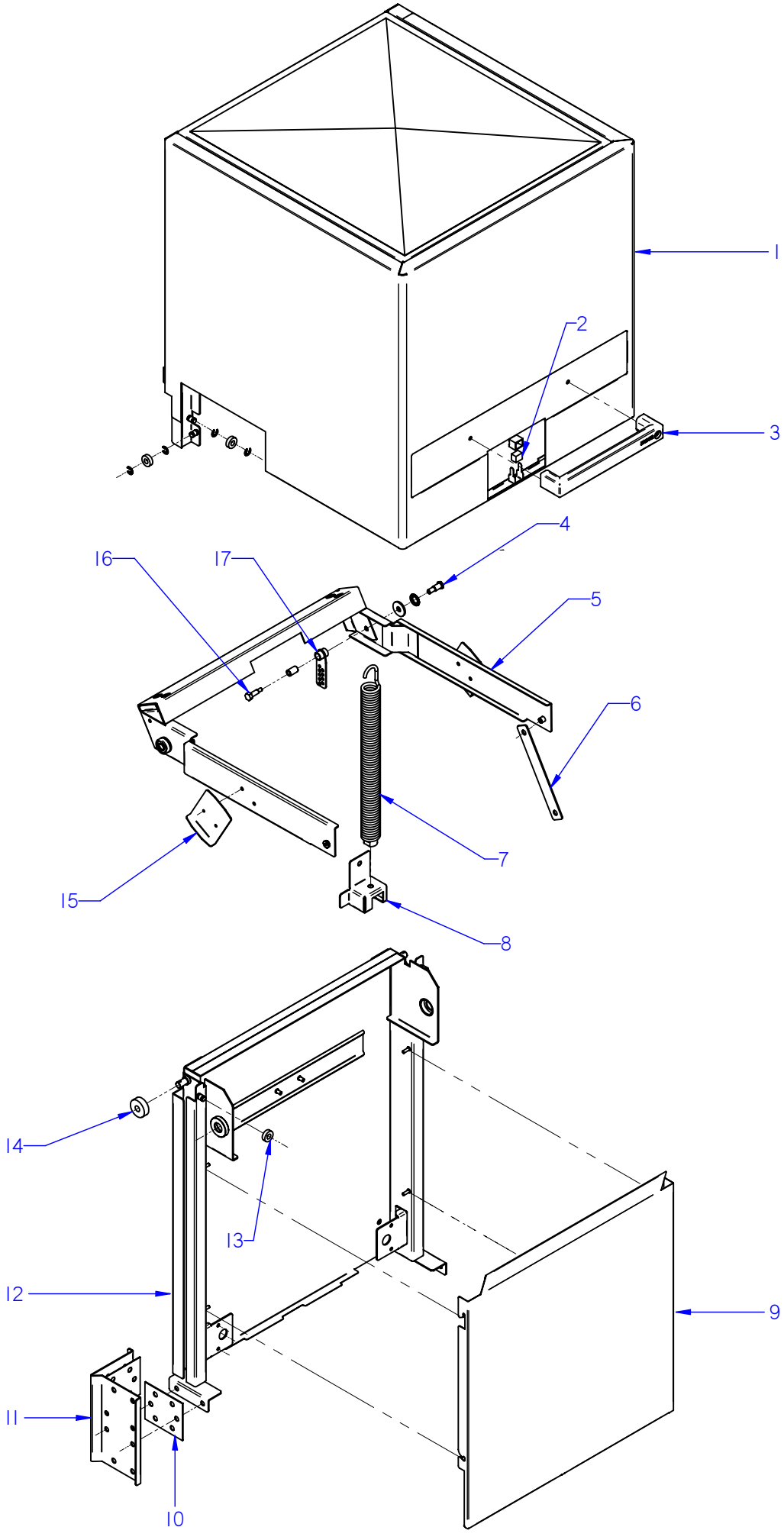

ITEM MARCADO EN COLOR = REPUESTO RECOMENDADO
COLOURED ITEM = RECOMMENDED SPARE PART

N plano	Firma	Fecha	Aparato	CAPO / HOOD	Lamina	
C-2717		2010-11	LAVAVAJILLAS AD-120 HY		2	Fagor Industrial S.Coop. FAGOR Oñate

MOD.	LAVAVAJILLAS DE CAPOTA PASS THROUGH DISHWASHER	ZONA / ZONE	CAPO / HOOD	PLANO DIAGRAM	C-2717

ITEM	CODIGO CODE	DENOMINACION	NAME	AD-120 HY							NOTAS
1	Z720518000	CAPOTA COMPL. AD-120C	COMPLETE HOOD AD-120C	1							ELIMINADO 01.05.2012
1	12044711	CAPOTA COMPL. DP 0.8	COMPLETE HOOD DP 0.8	1							INTRODUCIDO 01.05.2012
	Z710515000	CASQUILLO RODANTE	REVOLVING BUSHING	4							
	Q271006000	ARANDELA DE SEGURIDAD 8	SAFETY WASHER 8	8							
2	Z200506000	IMAN	MAGNET	1							
S/Nº	Z200507000	PROTECTOR IMAN	MAGNET PROTECTOR	1							
3	Z710558000	ASA CAPOTA AD	AD HOOD HANDLE	1							
	Q308002000	ARANDELA DUBO A6 NYLON	WASHER DUBO A6 NYLON	2							
	Q032041000	TORNILLO ALOMADO M6x10	CURVED SCREW M6x10	2							
4	Z710542000	EJE DE GIRO	ROTARY SHAFT	2							
	Z710541000	RODAMIENTO 6200-2RS1	BEARING 6200-2RS1	2							
	Q308012000	ARANDELA 30x10x3	WASHER 30x10x3	2							
5	Z720533000	BALANCIN COMPLETO AD	COMPLETE ROCKER ARM AD	1							
	Q232050000	ARANDELA A8	WASHER A8	2							
	Q262050000	ARANDELA GROW. A8 A.304	WASHER GROW. A8 A.304	2							
	Q162050000	TUERCA EXAGONAL M8x1 INOX.	HEXAGONAL NUT M8x1 INOX.	2							
6	Z710523000	BIELA	ROD	2							
	Q308012000	ARANDELA 30x10x3	WASHER 30x10x3	8							
	Q232040000	ARANDELA A6	WASHER A6	4							
	Q012041000	TORNILLO EXAGON. M6x10 A.304	HEXAGONAL BOLT. M6x10 A.304	4							
7	Z720529000	CONJUNTO MUELLE	HOOK COMPLETE	2							
8	Z720525000	SOPORTE MUELLE INF DCH	HOOK RIGHT SUPPORT	1							
S/Nº	Z720526000	SOPORTE MUELLE INF IZQ	HOOK LEFT SUPPORT	1							
9	Z718932000	CUBIERTA RESORTES CLINIC	SPRING COVER	1							
10	Z710547000	JUNTA SOPORTE CAPO	HOOD SUPPORT SEAL	4							
11	Z710539000	SOPORTE GUIA CAPO	HOOD GUIDE SUPPORT	2							
	Q012053000	TORNILLO EXAGON. M8x20 A.304	HEXAGONAL BOLT. M8x20 A.304	10							
	Q013153000	TORNILLO EX M-8x20 LATON CRO.	HEX BOLT M-8x20 CHR. BRASS	4							
	Q232050000	ARANDELA A8	WASHER A8	14							
	Q262050000	ARANDELA GROW. A8 A.304	WASHER GROW. A8 A.304	14							
	Q162050000	TUERCA EXAG. M8x1 INOX.	HEXAG. SCREW M8x1 STAINLESS	10							

MOD.	LAVAVAJILLAS DE CAPOTA PASS THROUGH DISHWASHER	ZONA / ZONE	CAPO / HOOD	PLANO DIAGRAM	C-2717

ITEM	CODIGO CODE	DENOMINACION	NAME	AD-120 HY							NOTAS
12	Z720522000	GUIA CAPO COMPLETA AD-120C	COMPLETE HOOD GUIDE AD-12	1							
	Q352024000	PASADOR DE ALETA 4x25	WING PIN 4x25	2							
13	Z710515000	CASQUILLO RODANTE	REVOLVING BUSHING	2							
	Q271006000	ARANDELA DE SEGURIDAD 8	SAFETY WASHER 8	4							
14	Z710546000	CASQUILLO	BUSHING	2							
15	Z710548000	ESCUADRA TOPE	BUFFER BRACKET	2							
	Q012041000	TORNILLO EXAGON. M6X10 A.304	HEXAGONAL BOLT. M6X10 A.304	4							
	Q242040000	ARANDELA ABANICO	FAN WASHER	4							
16	Z720538000	EJE DE GIRO MUELLE	HOOK ROTARY SHAFT	2							
	Z720537000	COJINETE AUTOLUBRICADO AD	AUTOLUBRIC. BEARING	2							
17	Z720536000	SOPORTE MUELLE COMPLETO	HOOK SUPPORT	2							

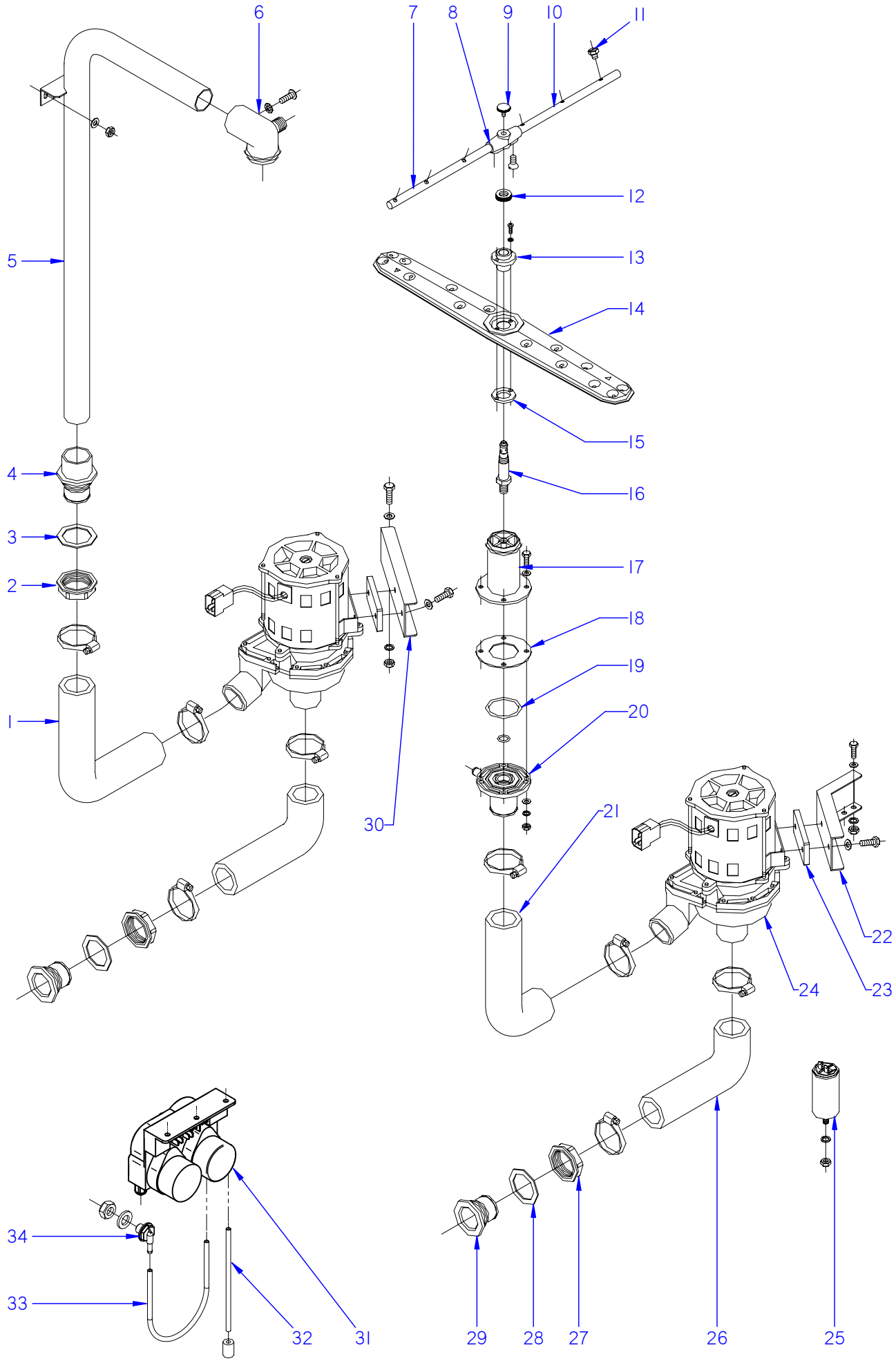

ITEM MARCADO EN COLOR = REPUESTO RECOMENDADO
COLOURED ITEM = RECOMMENDED SPARE PART

N plano	Firma	Fecha	Aparato	Lamina	
C-2718		2010-11	PARTE FUNCIONAL LAVADO / WASH FUNCTIONAL PART LAVAVAJILLAS AD-120 HY	3	Fagor Industrial S.Coop. FAGOR Oñate

MOD.	LAVAVAJILLAS DE CAPOTA PASS THROUGH DISHWASHER	ZONA / ZONE	PARTE FUNCIONAL LAVADO WASH FUNCTIONAL PART	PLANO DIAGRAM	C-2718

ITEM	CODIGO CODE	DENOMINACION	NAME	AD-120 HY							NOTAS
1	Z740901000	CONDUCTO IMPULSION	IMPULSE PIPE	1							ELIMINADO 17.09.2012
1	12023519	CONDUCTO IMPULSION POSTER.	REAR IMPULSE PIPE	1							INTRODUCIDO 17.09.2012
	Q881307000	ABRAZADERA 40-60	CLAMP 40-60	2							
2	Z710708000	TUERCA PASAMUROS	WALL BUSHING NUT	1							
3	Q307058000	ARANDELA 60x44x2	WASHER 60x44x2	1							
4	Z330790000	PASAMUROS IMPULSION PRELAV.	PREWASH IMPULSE BUSHING	1							
5	Z710709000	ARBOL LAVADO COMPLETO	COMPLETE WASH CAM	1							
	Q232040000	ARANDELA A6	WASHER A6	2							
	Q162040000	TUERCA EXAGONAL M6	HEXAGONAL NUT M6	2							
6	Z710705000	SOPORTE DISTRIBUIDOR SUPER.	UPPER DISTRIBUTION SUPPORT	1							
	Q152004000	TORNILLO APLAST. M5x13 A.304	MUSHROOM HEAD BOLT M5x13 A	1							
7	Z201902000	RAMA ACLARADO IZQUIERDA	LEFT RINSE BRANCH	2							
8	Z201903000	SOPORTE RAMA ACLARADO COM.	COM. RINSE BRANCH SUPPORT	2							
	Q042021000	TORNILLO AVELLAN. M4x10 A304	COUNTERSUNK BOLT M4x10 A30	4							
9	Q152016000	TORNILLO ESPECIAL M.5x0.8	SPECIAL BOLT M.5X0.8	2							
10	Z201901000	RAMA ACLARADO DERECHA	RIGHT RINSE BRANCH	2							
11	Z211903000	TOBERA ACLARADO	RINSE NOZZLE	12							
12	Z680738000	TUERCA ESPECIAL	SPECIAL NUT	2							
13	Z710712000	CASQUILLO DISTRIBUIDOR	DISTRIBUTOR BUSHING	2							
	Q032011000	TORNILLO ALOMADO M3x10	CURVED SCREW M3X10	4							
14	Z710701000	DISTRIBUIDOR COMPLETO	COMPLETE DISTRIBUTOR	2							
15	Z710713000	ARANDELA AMARRE	ANCHORAGE WASHER	2							
16	Z710711000	EJE CENTRAL	CENTRAL SHAFT	2							
17	Z710704000	SOPORTE DISTRIBUIDOR INFER.	LOWER DISTRIBUTION SUPPORT	1							
18	Z710714000	JUNTA DE GOMA	RUBBER SEAL	1							
19	Q307057000	JUNTA TORICA 47.22x54.28x3.53	O-RING 47.22x54.28x3.53	1							
	Q307050000	JUNTA TORICA 13.94x19.18x2.6	O-RING 13.94x19.18x2.6	1							
20	Z710706000	PASAMUROS	BUSHING	1							
	Q012044000	TORNILLO EXAGONAL M6x25	HEXAGONAL BOLT M6x25	4							
	Q262040000	ARANDELA GROW. A6 A.304	WASHER GROW. A6 A.304	4							
	Q162040000	TUERCA EXAGONAL M6	HEXAGONAL NUT M6	4							

MOD.	LAVAVAJILLAS DE CAPOTA PASS THROUGH DISHWASHER	ZONA / ZONE	PARTE FUNCIONAL LAVADO WASH FUNCTIONAL PART	PLANO DIAGRAM	C-2718

ITEM	CODIGO CODE	DENOMINACION	NAME	AD-120 HY							NOTAS
21	Z710905000	CONDUCTO IMPULSION ANTER.	FRONT IMPULSE PIPE	1							
	Q881307000	ABRAZADERA 40-60	CLAMP 40-60	2							
22	Z711001000	SOPOR. MOTOBOMBA ANTERIOR	SUPPORT FRONT MOTOR-PUMP	1							
	Q012042000	TORNILLO EXAGONAL M6x15	HEXAGONAL BOLT M6x15	2							
	Q262040000	ARANDELA GROW. A6 A.304	WASHER GROW. A6 A.304	2							
	Q162040000	TUERCA EXAGONAL M6	HEXAGONAL NUT M6	2							
23	Z201003000	BASE BOMBA LAVADO 1003016	WASH PUMP BASE 1003016	2							
	Q232040000	ARANDELA A6	WASHER A6	4							
	Q012042000	TORNILLO EXAGONAL M6x15	HEXAGONAL BOLT M6x15	4							
24	Z201011000	BOMBA DE LAVADO	WASH PUMP	2							
25	V321300000	CONDENSADOR 10 M,F,	CONDENSER 10 M,F,	2							
25	V817100000	CONDENSADOR 6 M,F,	CONDENSER 6 M,F,	1							
	Q162050000	TUERCA EXAGONAL M8x1 INOX,	HEXAGONAL NUT M8x1 INOX.	2							
26	Z710904000	CONDUCTO ASPIRACION	EXTRACTOR PIPE	2							
	Q881307000	ABRAZADERA 40-60	CLAMP 40-60	4							
27	Z710708000	TUERCA PASAMUROS	WALL BUSHING NUT	2							
28	Q307058000	ARANDELA 60x44x2	WASHER 60x44x2	2							
29	Z710903000	PASAMUROS ASPIRACION	EXTRACTOR BUSHING	2							
30	Z711002000	SOPORTE MOTOBOMBA POSTER.	REAR MOTOR PUMP SUPPORT	1							
	Q012042000	TORNILLO EXAGONAL M6x15	HEXAGONAL BOLT M6x15	2							
	Q232040000	ARANDELA A6	WASHER A6	2							
	Q262040000	ARANDELA GROW. A6 A.304	WASHER GROW. A6 A.304	2							
	Q162040000	TUERCA EXAGONAL M6	HEXAGONAL NUT M6	2							
31	Z208915000	DOSIFICADOR DGTE ABRILLANT.	DETERGENT DISPENSER RINS.	1							
32	Z448614000	CONDUCTO ASPIRACIÓN	EXTRACTOR PIPE	1							
	Z701152000	PESO FILTRO	FILTER WEIGHT	1							
33	3699300000	CONDUCTO DOSIF. TRANSP 6X4	DETERGENT DISP. EXTRACT.	1							
34	Z230905000	PASAMUROS DETERGENTE	INOX DETERGENT WALL BUSHIN	1							ELIMINADO 30.11.10
34	Z208927000	PASAMUROS DETERGENTE INOX	DETERGENT WALL BUSHING	1							INTRODUCIDO 30.11.10

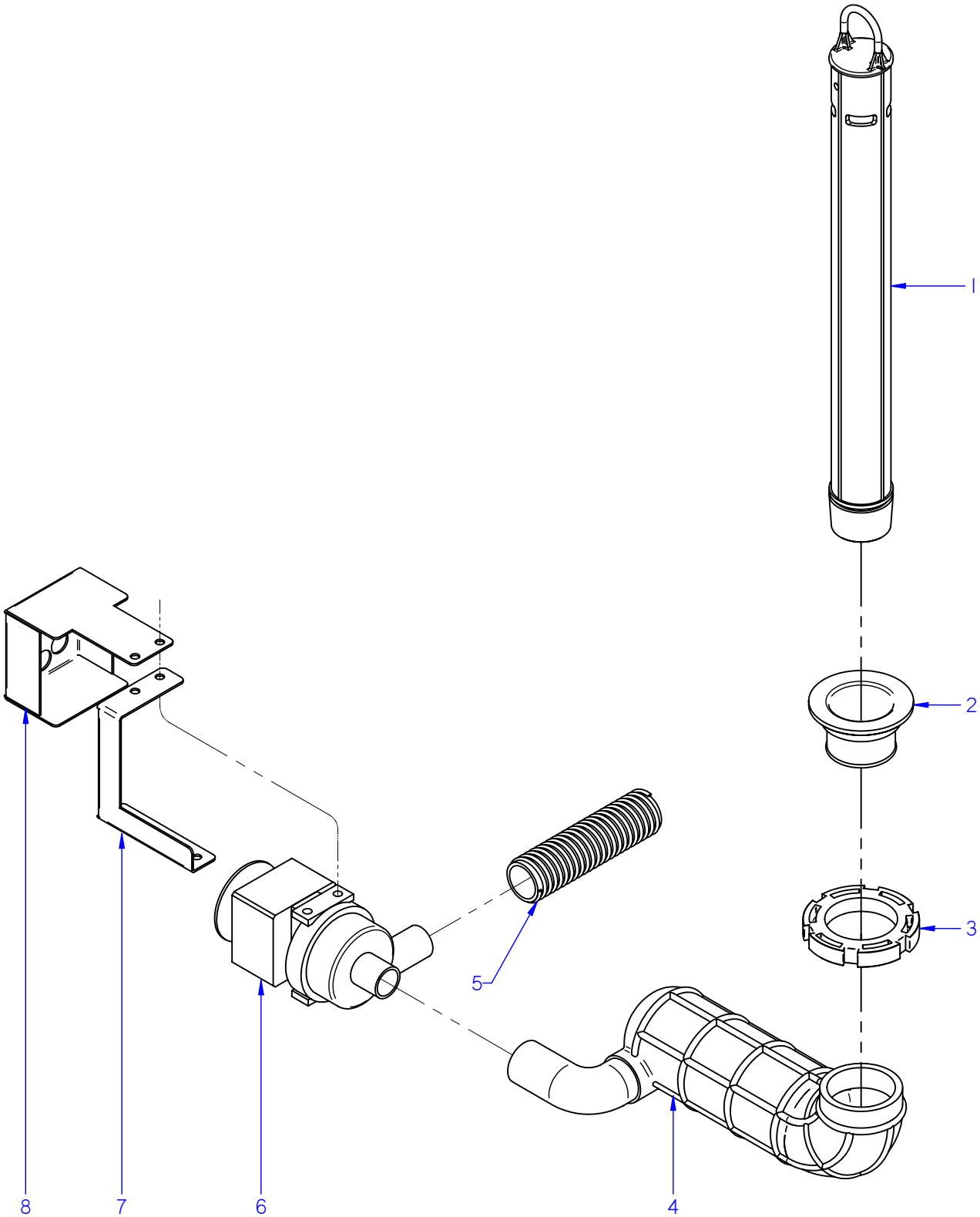

ITEM MARCADO EN COLOR = REPUESTO RECOMENDADO
COLOURED ITEM = RECOMMENDED SPARE PART

N plano	Firma	Fecha	Aparato	Lamina	
C-2719		2010-11	PARTE FUNCIONAL DESAGÜE / RAINAGE FUNCTIONAL PART LAVAVAJILLAS AD-120 HY	4	Fagor Industrial S.Coop. FAGOR Oñate

MOD.	LAVAVAJILLAS DE CAPOTA PASS THROUGH DISHWASHER	ZONA / ZONE	PARTE FUNCIONAL DESAGÜE DRAINAGE FUNCTIONAL PART	PLANO DIAGRAM	C-2719

ITEM	CODIGO CODE	DENOMINACION	NAME	AD-120 HY							NOTAS
1	Z710901000	ALIVIADERO	OVERFLOW	1							
	Q307051000	JUNTA TORICA 36.17x41.41x2.6	O-RING 36.17x41.41x2.6	1							
2	Z710902000	PASAMUROS DESAGUE	DRAINAGE BUSHING	1							
	Q307059000	ARANDELA 72x56x2	WASHER 72x56x2	1							
3	Q220001000	TUERCA RANURADA	GROOVED NUT	1							
4	Z711004000	ACUMULADOR CAPOTA	HOOD ACCUMULATOR	1							
	Q881304000	ABRAZADERA 20-32	CLAMP 20-32	2							
5	Z220903000	MANGUERA DESAGUE	DRAINAGE HOSE	1							
	Q881307000	ABRAZADERA 40-60	CLAMP 40-60	1							
6	Z711007000	BOMBA DESAGUE	DRAINAGE PUMP	1							
	Q262040000	ARANDELA GROW. A6 A.304	WASHER GROW. A6 A.304	4							
	Q012042000	TORNILLO EXAGONAL M6x15	HEXAGONAL BOLT M6x15	4							
	Q032032000	TORNILLO ALOMADO M5x15	CURVED SCREW M5X15	2							
	Q242030000	ARANDELA ABANICO A5 A.304	FAN WASHER A5 A.304	2							
7	Z711005000	SOPORTE MOTOBOMBA	MOTOR PUMP SUPPORT	1							
8	Z711006000	PROTECCION BOMBA	PUMP PROTECTION	1							

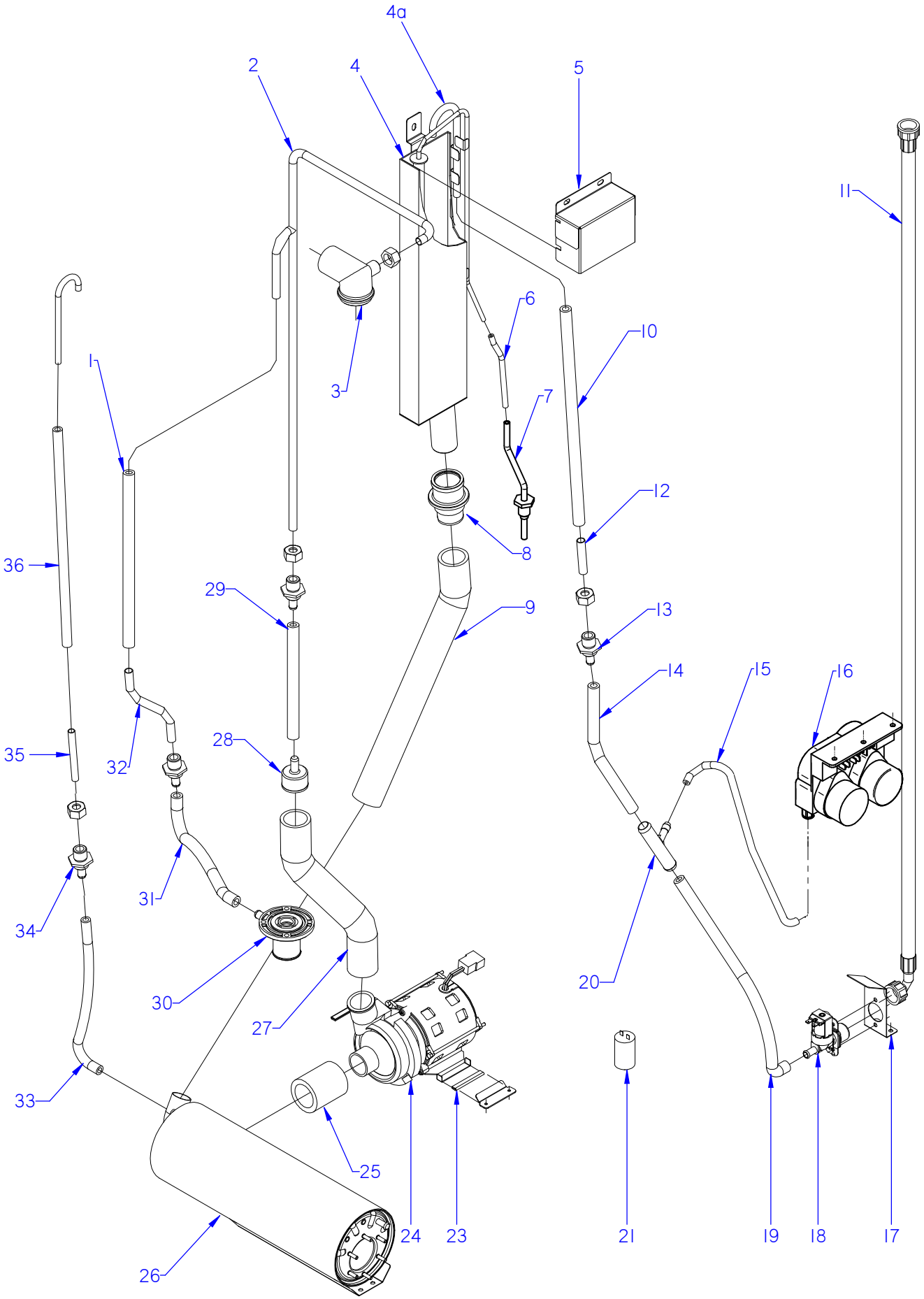

ITEM MARCADO EN COLOR = REPUESTO RECOMENDADO
COLOURED ITEM = RECOMMENDED SPARE PART

N plano	Firma	Fecha	Aparato	Lamina	
C-2720		2010-11	PARTE FUNCIONAL ACLARADO / RINSE FUNCTIONAL PART LAVAVAJILLAS AD-120 HY	5	Fagor Industrial S.Coop. FAGOR Oñate

MOD.	LAVAVAJILLAS DE CAPOTA PASS THROUGH DISHWASHER	ZONA / ZONE	PARTE FUNCIONAL ACLARADO RINSE FUNCTIONAL PART	PLANO DIAGRAM	C-2720

ITEM	CODIGO CODE	DENOMINACION	NAME	AD-120 HY							NOTAS
1	3676900000	TUBO GOMA NEGRA Ø 17*10	BLACK RUBBER PIPE 17*10	1							
	Q881302000	ABRAZADERA 12-20	CLAMP 12-20	2							
2	Z718911000	RAMA DE ACLARADO CLINIC	RINSE BRANCH	1							
3	Z710705000	SOPORTE DISTRIBUIDOR SUPER.	UPPER DISTRIBUTION SUPPORT	1							
4	Z727412000	DEPOSITO CLINIC COMPLETO	CLINIC FULL TANK	1							
4a	12008220	CAÑO	PIPE	1							INTRODUCIDO 29.01.2013
5	Z727413000	TAPA DEPOSITO CLINIC	CLINIC TANK TOP	1							
	Q162040000	TUERCA EXAGONAL M6	HEXAGONAL NUT M6	3							
6	3702400000	TUBO DE GOMA Ø 8*4 x140	RUBBER PIPE Ø 8*4 x140	1							
	P102154000	BRIDA ELASTICA TUBO	ELASTIC PIPE FLANGE	2							
7	Z727407000	PASAMUROS PRES. CLINIC	CLINIC BUSHING	1							
	Q306024000	JUNTA 18x12.5x1.5	SEAL 18x12.5x1.5	1							
8	Z330790000	PASAMUROS IMPULSION PRELAV.	PREWASH IMPULSE BUSHING	1							
	Z710708000	TUERCA PASAMUROS	BUSHING NUT	1							
	Q307058000	ARANDELA 60x44x2	WASHER 60x44x2	1							
	Q307065000	JUNTA TORICA 43,01x37,77x2,62	O-RING 43,01x37,77x2,62	1							
	Q881307000	ABRAZADERA 40*60	CLAMP 40*60	1							
9	Z718925000	CONDUCTO DEPOSITO-CALDERIN	PIPE-COPPER DEPOSIT	1							
	Q881307000	ABRAZADERA 40*60	CLAMP 40*60	2							
10	3676900000	TUBO GOMA NEGRA Ø 17*10	BLACK RUBBER PIPE 17*10	1							
	Q881302000	ABRAZADERA 12*20	CLAMP 12-20	2							
11	Z602121000	MANGUERA ENTRADA DE AGUA	WATER INTAKE HOSE	1							
12	Z727405000	TUBO ENTRADA AGUA	WATER INTAKE PIPE	1							
	Q307048000	JUNTA TORICA 9.12x16.18x3.53	O-RING Ø9.12X16.18X3.53	4							
13	Z711904000	PASAMUROS ACLARADO	RINSE BUSHING	2							
	Q307032000	JUNTA 32x21x3	SEAL Ø 32X21X3	2							
	Q223023000	TUERCA EXAGONAL 5-8 LATON	HEX NUT 5-8 BRASS	2							
14	3676900000	TUBO GOMA NEGRA 17*10	BLACK RUBBER PIPE 17*10	1							
	Q881302000	ABRAZADERA 12*20	CLAMP 12-20	4							
15	3704000000	TUBO GOMA NEGRA Ø10,5*5	BLACK RUBBER PIPE Ø10,5*5	1							
	Q881308000	ABRAZADERA 8-14L	CLAMP 8-14L	2							

MOD.	LAVAVAJILLAS DE CAPOTA PASS THROUGH DISHWASHER	ZONA / ZONE	PARTE FUNCIONAL ACLARADO RINSE FUNCTIONAL PART	PLANO DIAGRAM	C-2720

ITEM	CODIGO CODE	DENOMINACION	NAME	AD-120 HY							NOTAS
16	Z208915000	DOSIFICADOR DGTE ABRILLANT.	DETERGENT DISPENSER RINS.	1							
17	Z201101000	ESCUADRA AMARRE ELECTROVA	SOLENOID VALVE BRACKET	1							
	Q152024000	TORNILLO AVELLAN. M4x8 A304	HEXAGONAL COUNTERSUNK M4	2							
	Q242020000	ARANDELA ABANICO A.4 A304	FAN WASHER A4 A.304	2							
	Q012031000	TORNILLO EXAGONAL. M5x10 A304	HEXAGONAL BOLT M5X10 A.304	2							
	Q232030000	ARANDELA A5	WASHER A5	2							
18	Z701135000	E.V. SIMPLE 0V COD. 255.208	SOLENOID VALVE SIMP.220V CO	1							
	Z841107000	REGULAD. ENTRADA 10L 254.067	INPUT CONTROLLER 10L 254.067	1							ELIMINADO 01.05.2012
	12044690	REGULADOR DE CAUDAL 10L	FLOW REGULATOR 10L	1							INTRODUCIDO 01.05.2012
19	3676900000	TUBO GOMA NEGRA 17*10	BLACK RUBBER PIPE 17*10	1							
	Q881302000	ABRAZADERA 12*20	CLAMP 12-20	4							
20	Z718949000	TE TOMA PRESION	PRESSURE INTAKE T	1							
21	V817100000	CONDENSADOR 6 M,F,	CONDENSER 6 M,F,	1							
22	Z718931000	SOPORTE MOTOBOMBA CLINIC	CLINIC MOTOR PUMP SUPP.	1							
	Q152024000	TORNILLO AVELLAN. M4x8 A304	HEXAGONAL COUNTERSUNK M4	2							
23	3701700000	PERFIL GOMA NEGRO EN U 9*4	BLACK RUBBER PROFILE IN U 9	2							
24	Z401001000	BOMBA LAVADO	WASH PUMP	1							
25	Z162301000	CONDUCTO ASPIRAC. IMPULSION	EXTRACTOR PIPE	1							
	Q881307000	ABRAZADERA 40*60	CLAMP 40*60	2							
26	Z258916000	CALDERIN COMPLETO BBT.	COMPLETE DRUM	1							
27	Z718935000	CONDUCTO IMPULSION CLINIC	DRIVE THROUGH CLINIC	1							
	Q881307000	ABRAZADERA 40*60	CLAMP 40*60	2							
28	Z701104000	REDUCCION	REDUCTION	1							
29	3676900000	TUBO GOMA NEGRA 17*10	BLACK RUBBER PIPE 17*10	2							
	Q881302000	ABRAZADERA 12*20	CLAMP 12-20	4							
30	Z710706000	PASAMUROS	BUSHING	1							
31	3676900000	TUBO GOMA NEGRA 17*10	BLACK RUBBER PIPE 17*10	1							
	Q881302000	ABRAZADERA 12*20	CLAMP 12-20	2							
32	Z718927000	TUBO PAS. ACLARADO CLINIC	CLINIC RINSE PIPE	1							
33	3676900000	TUBO GOMA NEGRA 17*10	BLACK RUBBER PIPE 17*10	1							
	Q881302000	ABRAZADERA 12*20	CLAMP 12-20	2							

MOD.	LAVAVAJILLAS DE CAPOTA PASS THROUGH DISHWASHER	ZONA / ZONE	PARTE FUNCIONAL ACLARADO RINSE FUNCTIONAL PART	PLANO DIAGRAM	C-2720

ITEM	CODIGO CODE	DENOMINACION	NAME	AD-120 HY							NOTAS
34	Z718951000	PASAMUROS ACLAR. CLINIC	CLINICRINSE BUSHING	1							
	Q223107000	TUERCA M.20x2.5	NUT M.20X2.5	1							
35	Z718928000	TUBO PASAM. CALDER. CLINIC	CLINIC RINSE PIPE	1							
	Q307048000	JUNTA TORICA 9.12x16.18x3.53	O-RING Ø9.12X16.18X3.53	1							
36	3676900000	TUBO GOMA NEGRA 17*10	BLACK RUBBER PIPE 17*10	1							
	Q881302000	ABRAZADERA 12*20	CLAMP 12-20	2							

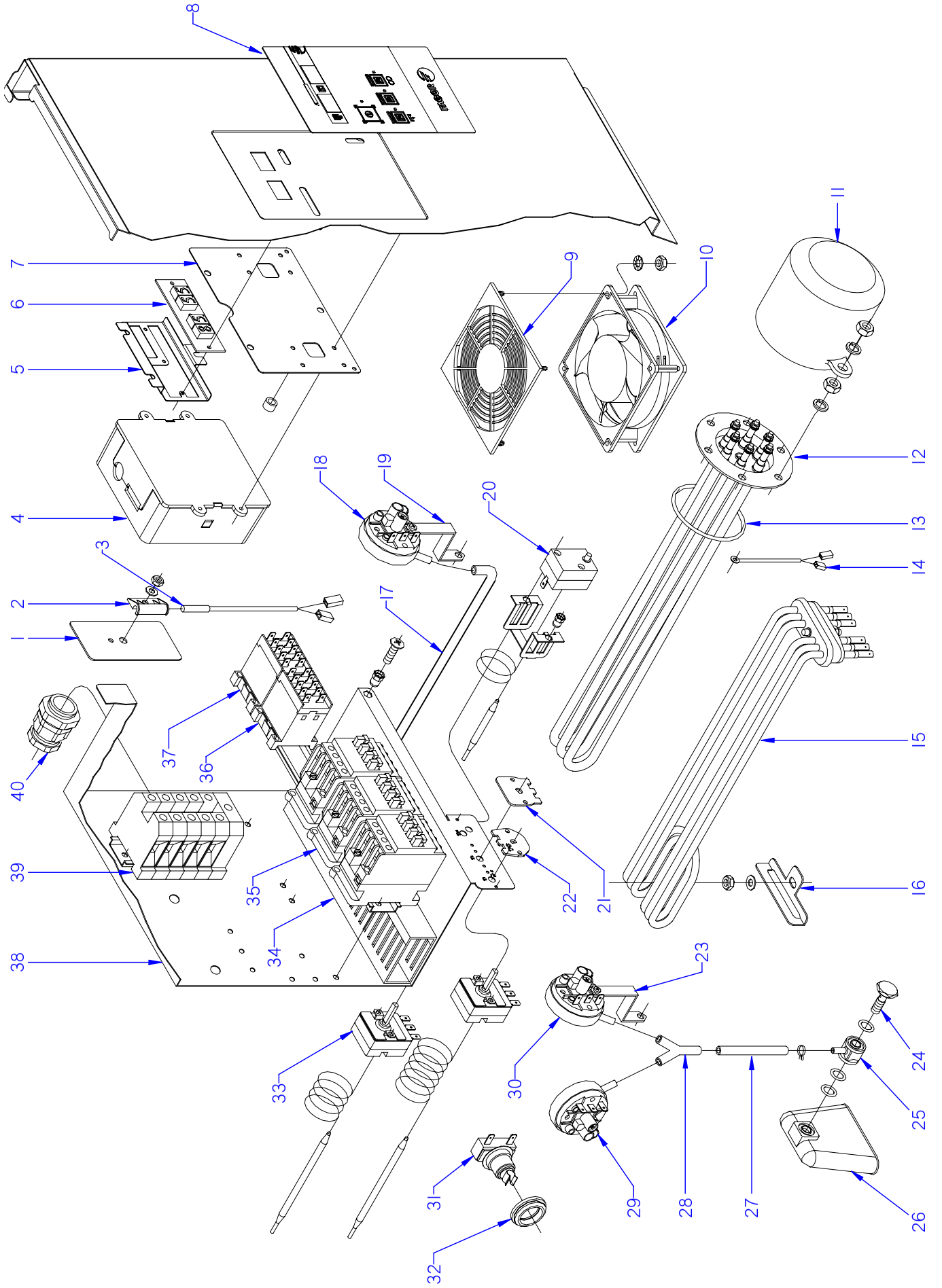

ITEM MARCADO EN COLOR = REPUESTO RECOMENDADO
COLOURED ITEM = RECOMMENDED SPARE PART

N plano	Firma	Fecha	Aparato	Lamina	
C-2721		2010-11	PARTE FUNCIONAL ELECTRICA / ELECTRICS FUNCTIONAL PART LAVAVAJILLAS AD-120 HY	6	Fagor Industrial S.Coop. FAGOR Oñate

MOD.	LAVAVAJILLAS DE CAPOTA PASS THROUGH DISHWASHER	ZONA / ZONE	PARTE FUNCIONAL ELECTRICA ELECTRICS FUNCTIONAL PART	PLANO DIAGRAM	C-2721

ITEM	CODIGO CODE	DENOMINACION	NAME	AD-120 HY							NOTAS
1	Z101211000	APOYO INTERRUPTOR	SWITCH SUPPORT	1							
2	Z203010000	AMARRE INTERRUPTOR MAGNET.	MAGNETIC SWITCH FASTENER	1							
	Q232040000	ARANDELA A-6	WASHER A-6	1							
	Q162040000	TUERCA EXAGONAL M-6	HEXAGONAL NUT M-6	1							
3	Z203009000	INTERRUPTOR MAGNETICO	MAGNETIC SWITCH	1							
4	Z213069000	TARJETA 5 RELES	5 RELAY CARD	1							ELIMINADO 01.06.11
4	Z213073000	TARJETA 5 RELES	5 RELAY CARD	1							INTRODUCIDO 01.06.11
	Q232020000	ARANDELA A4	WASHER A4	4							
	Q242020000	ARANDELA ABANICO A5 A.304	FAN WASHER A5 A.304	4							
	Q042022000	TORN. AVELLANADO M4X15	HEXAGONAL COUNTERSUNK M4	4							
	Z515045000	CASQUILLO SEPARADOR B	SEPARATOR BUSHING B	4							
5	Z713023000	SOPORTE DISPLAY CAPOTA	HOOD DISPLAY SUPPORT	1							
6	Z713017000	DISPLAY GICAR TEMPERATURAS	GICAR TEMPERATURE DISPLAY	1							
7	Z713027000	SOPORTE PROGRAMADOR RELÉ	RELAY PROGRAMMER SUPPORT	1							
8	Z717402000	EMBELLEC. ADHESIVO AD-120 HY	ADHESIVE TRIM AD-120 HY	1							
9	Z713015000	PROTECCION VENTILADOR ABS	FAN PROTECTION ABS	1							
	Q042022000	TORNILLO AVELLANADO M4x15	COUNTERSUNK BOLT M4x15	8							
	Q162020000	TUERCA EXAGONAL M4	HEXAGONAL NUT M4	12							
	Q242020000	ARANDELA ABANICO A-4 A304	FAN WASHER A-4 A304	8							
10	Z103066000	VENTILADOR 230V,50/60 HZ	FAN 230V,50/60 HZ	1							
11	Z651731000	CAPERUZA RESISTEN. CALDERIN	DRUM RESIST. CAP	1							
	Q163140000	TUERCA EXAGONAL M6 LATON	HEXAGONAL NUT M6 BRASS	2							
	Q012031000	TORNIL. EXAGONAL M5x10 A.304	HEXAGONAL BOLT M5X10 A.304	2							
	Q232030000	ARANDELA A-5	WASHER A-5	2							
12	Z728306000	RESISTENCIA CALDERIN 12 KW	DRUM RESISTOR 12 KW	1							
	Q221305000	TUERCA EX, AUTO. M4 ZINCADA	HEX NUT , AUTO. M4 ZINC-COAT	6							
	Q163140000	TUERCA EXAGONAL M6 LATON	HEXAGONAL NUT M6 BRASS	6							
	Q262040000	ARANDELA GROW. A6 A,304	WASHER GROW. A6 A.304	6							
13	Q307035000	JUNTA TORICA AN-36 282333	O-RING AN-36 282333	1							
14	Z713028000	SONDAS TEMPERATURA GICAR	GICAR TEMPERATURE GAUGE	2							
15	Z743601000	RESISTENCIA TANQUE	TANK RESISTOR	1							

MOD.	LAVAVAJILLAS DE CAPOTA PASS THROUGH DISHWASHER	ZONA / ZONE	PARTE FUNCIONAL ELECTRICA ELECTRICS FUNCTIONAL PART	PLANO DIAGRAM	C-2721

ITEM	CODIGO CODE	DENOMINACION	NAME	AD-120 HY							NOTAS
16	Z743602000	SOPORTE RESISTENCIA TANQUE	TANK RESISTOR SUPPORT	1							
	Q232040000	ARANDELA A,6	WASHER A,6	1							
	Q162040000	TUERCA EXAGONAL M6	HEXAGONAL NUT M6	1							
17	3702400000	TUBO DE GOMA 8x4 D8*4	RUBBER PIPE 8x4 D8*4	1							
	P102154000	BRIDA ELASTICA TUBO	ELASTIC PIPE FLANGE	2							
18	Z213059000	TRIPLE PRESOTATO 40-120-150	TRIPLE PRESSOST. 4 0-120-150	1							
19	Z602923000	SOPORTE PRESOSTATO	PRESSURE SWITCH SUPPORT	1							
	Q082032000	TORNILLO ALOMADO BZ-3,5x9,5	CURVED SCREW BZ-3.5x9.5	1							
	Q162040000	TUERCA EXAGONAL M6	HEXAGONAL NUT M6	1							
20	Z213014000	LIMITADOR TECASA P.	LIMITER TECASA P.	1							
S/Nº	Z203060000	AMARRE LIMITADOR TECASA	LIMITER FASTENING TECASA	1							
	Q221341000	REMACHE EXAGONAL M4	HEXAGONAL RIVET M4	2							
	Q152024000	TORNILLO AVELLANADO M4x8	COUNTERSUNK BOLT M4x8	2							
21	Z713038000	REGU. TERMOS. TANQUE 60 ºC	TANK THERMOSTAT CONTROL 6	1							ELIMINADO 30.11.2012
21	12044848	REGULADOR A 60ºC Tc DE 85ºC	REGULATOR 60ºC Tc DE 85ºC	1							INTRODUCIDO 30.11.2012
22	Z718446000	CHAPA W 85ºC	PLATE W 85ºC	1							ELIMINADO 31.10.2012
23	Z602923000	SOPORTE PRESOSTATO	PRESSURE SWITCH SUPPORT	1							
	Q082032000	TORNILLO ALOMADO BZ-3,5x9,5	CURVED SCREW BZ-3.5x9.5	1							
	Q162040000	TUERCA EXAGONAL M6	HEXAGONAL NUT M6	1							
	Q232040000	ARANDELA A6	WASHER A6	1							
24	Z203013000	TORNILLO PRESOSTATO	PRESSURE SWITCH BOLT	1							
25	Z203012000	EMPALME PRESOSTATO	PRESSURE SWITCH CONNEX	1							
	Q307003000	JUNTA TOR.16,01x10,77x2,62	O-RING 16.01x10.77x2.62	3							
26	Z203011000	CAMARA PRESOSTATO	PRESSURE SWITCH	1							
27	3702400000	TUBO DE GOMA 8x4 D8*4	RUBBER PIPE 8x4 D8*4	1							
	P102154000	BRIDA ELASTICA TUBO	ELASTIC PIPE FLANGE	2							
28	Z103077000	RACORD EN Y	Y-CONNECTION	1							
29	Z713098000	PRESOTATO SEGURIDAD	SAFETY PRESSOSTAT	1							
30	Z713002000	PRESOSTATO SIMPLE	SIMPLE PRESSURE SWITCH	1							
31	R213004000	TERMOSTATO REARME MANUAL	MANUAL RESET THERMOSTAT	1							ELIMINADO 11.02.2013
31	12046165	TERMOSTATO SEGURIDAD 115ºC	SECURITY THERMOSTAT 115ºC	1							INTRODUCIDO 11.02.2013

MOD.	LAVAVAJILLAS DE CAPOTA PASS THROUGH DISHWASHER	ZONA / ZONE	PARTE FUNCIONAL ELECTRICA ELECTRICS FUNCTIONAL PART	PLANO DIAGRAM	C-2721

ITEM	CODIGO CODE	DENOMINACION	NAME	AD-120 HY							NOTAS
32	N503017000	SOPORTE TERMOSTATO 1001713	THERMOSTAT SUPPORT 100171	2							
S/Nº	P443060000	TAPON	COVER	1							
33	Z203014000	TERMOSTATO CALDERIN	WASH DRUM THERMOSTAT	2							ELIMINADO 01.11.2012
33	12040858	TERMOSTATO CALDERIN	WASH DRUM THERMOSTAT	2							INTRODUCIDO 01.11.2012
	Q152024000	TORNILLO AVELLANADO M4x8	COUNTERSUNK BOLT M4x8	2							
34	3715520000	CANALETA UNEX 60,30,77	PIPING UNEX 60.30.77	3							
	Q419005000	REMACHE 4x8 ALMG3 / ALUMINIO	RIVET 4X8 ALMG3 / ALUMINIUM	4							
	Q221342000	REMACHE EXAGONAL M5	HEXAGONAL RIVET M5	1							
	Q232040000	ARANDELA A6	WASHER A6	2							
	Q162040000	TUERCA EXAGONAL M6	HEXAGONAL NUT M6	2							
	Q152004000	TORNILL, APLASTADO M5x13 A304	FLAT HEADED BOLT M5x13 A304	1							
	Z713035000	REGLETA 6 mm.	STRIP 6 mm.	1							
	Z103064000	BASE UNEX 1252	BASE UNEX 1252	2							
S/Nº	Z403016000	GUIA CONTACTOR L-100	CONTACTOR GUIDE L-100	1							
	R663055000	GUIA CONTACTOR L-120	CONTACTOR GUIDE L-120	1							
35	Z203050000	CONTAC. SIRIUS 3R 230V.50-60	CONTACT. SIRIUS 3R 230V.50-60	3							
36	Z213007000	CONTACTOR 230 V. 50-60 HZ	CONTACTOR 230 V. 50-60 HZ	2							
37	Z203062000	RELE 230V. 16A-60 HZ	RELAY 230V. 16A-60 HZ	1							
	Z103083000	GUIA CONTACTOR L-73	CONTACTOR GUIDE L-73	1							
38	Z713037000	CAJA CUADRO ELECTRICO	SWITCHBOARD BOX	1							
39	Z683069000	BORNA 16	TERMINAL 16	3							
	Z683097000	BORNA PASO WDU16 10204,8	STEP TERMINAL WDU16 10204.8	1							
	Z683070000	BORNA A TIERRA WEIDMULLER	TERMINAL TO EARTH WEIDMULL	1							
	Z683068000	SEÑALIZ.DEK-6WEIDMULLER	SIGNS DEK-6WEIDMULLER	1							
	R073005000	BORNAS PORTA FUSIBLES	FUSE HOLDER TERMINALS	2							
	R723015000	FUSIBLE CRISTAL 10A.	FUSE HOLDER TERMINALS	2							
	12040923	BORNAS PORTA FUSIBLES 13A 4	FUSE HOLDER TERMINALS 13A	2							INTRODUCIDO 09.07.2012
	12040926	FUSIBLE 0,50A Ø5MM 20X5 UL	FUSE 0.50A UL 20X5 Ø5MM	4							INTRODUCIDO 09.07.2012
	Z103083000	GUIA CONTACTOR L-73	CONTACTOR GUIDE L-73	1							
40	R023013000	PRENSA ESTOPAS	STUFFING BOX	1							

MOD.	LAVAVAJILLAS DE CAPOTA PASS THROUGH DISHWASHER	ZONA / ZONE	VARIOS / MISCELLANEOUS	PLANO DIAGRAM	

ITEM	CODIGO CODE	DENOMINACION	NAME	AD-120 HY							
	Z716135000	FOLLETO DE INSTRUCCIONES AD	INSTRUCTION LEAFLET	1							
	Z713026000	ESQUEMA TEORICO AD	THEORETICAL DIAGRAM AD.	1							PLANO HC-18188
	Z713025000	PLANO DE MONTAJE AD	ASSEMBLY PLAN AD	1							PLANO HC-18187
	Z713036000	LEYENDA CAPOTA	HOOD LEGEND	1							PLANO HC-17400
	Z283022000	CABLEADO TIERRA M.BOMBA	PUMP LAND WIRING	1							
	Z723012000	CABLEADO CALDERIN AD-120	DRUM AD-120 WIRING	1							
	Z713019000	CABLEADO PROLONGAD. SONDAS	PROBE WIRING	1							ELIMINADO 01.11.10
	Z713024000	INSTALACCION ELECTRICA AD	ELEC. INSTALATION AD	1							
	Z208917000	CABLEADO DD-DA G650	DD-DA G650 WIRING	1							
	Z723013000	CABLE TENSOR	TENSIONER WIRING	1							INTRODUCIDO 15.11.10

AD 120, AD 120 B, AD 120 B BT, AD 120 C, AD 120 HY, AD 120 W,
AD 100, AD 100 B, AD 100 B BT, AD 100 C, AD 100 HY, AD 100 W,
AD 90, AD 90 B, AD 90 B BT, AD 90 C, AD 90 HY, AD 90 W,

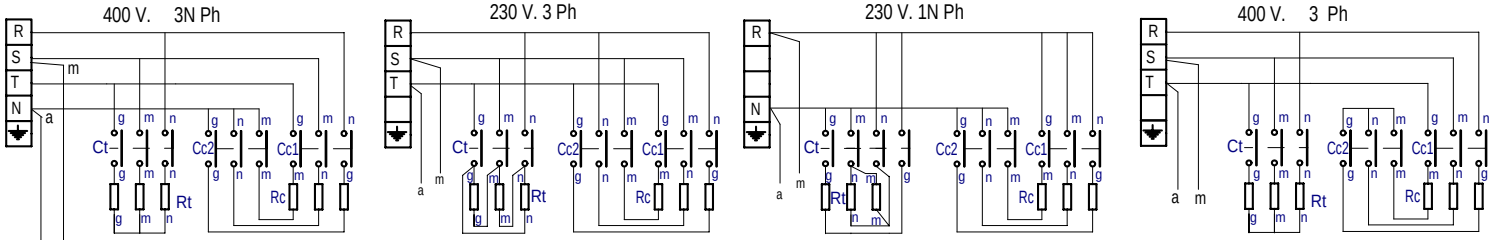

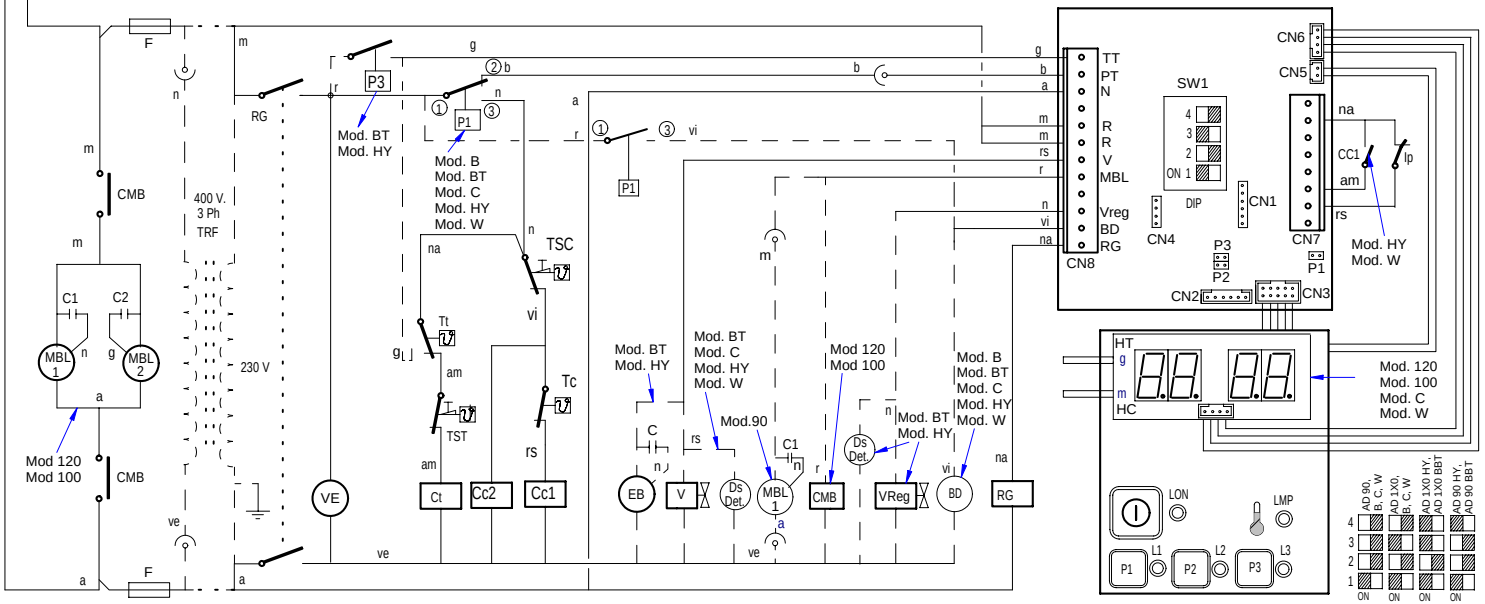

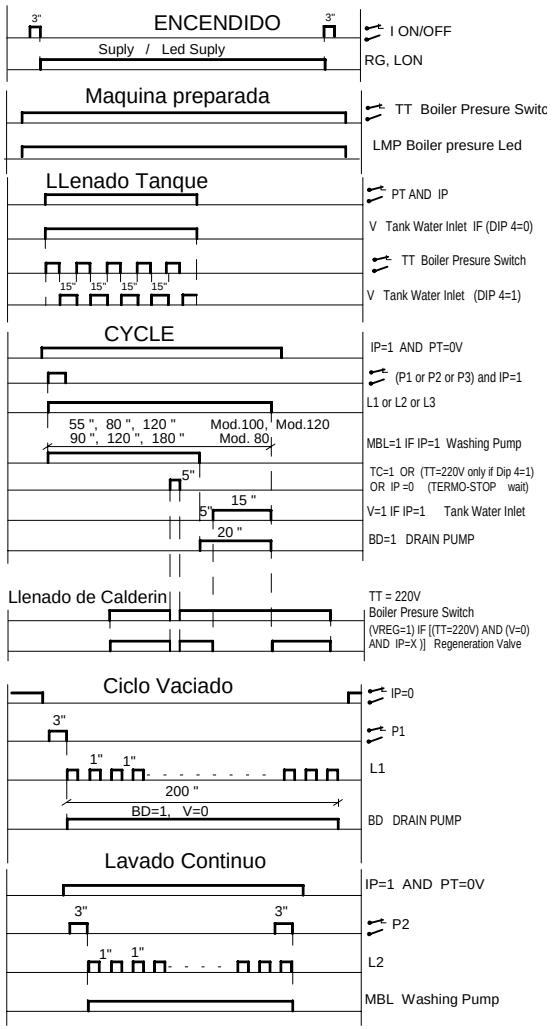

Z713026000

-	Esquema teorico AD 120	-	-	Z713026000	-
Zk./Nº	Pieza	Cant.	Materiala/Material	Klas. zk/Nº Clas.	Gainazal akabera/Tratamiento
Zk./Nº	Aldaketa/Modificaciones		Nork proposatua/Propuesta de	Data/Fecha	Perdoi orokorrak Tolerancias generales
.	.		.	.	< 5 ± 0.2 / 50 ÷ 100 ± 0.8
.	.		.	.	5 ÷ 25 ± 0.4 / >100± 1
.	.		.	.	25 ÷ 50 ± 0.6 / α ± 1
.	.		.	.	
.	.		.	.	

	Sinadura/Firma	Data/Fecha
Marraztua/Dibujado	M.Maillo	30-05-2009
Proiektatua/Proyectado	M.Maillo	30-05-2009
Egiaztatua/Comprobado	Z.Alrube	30-05-2009

FAGOR
Fagor Industrial,Koop.Elk, Mugatua

Eskala/Escala: -

LAVAVAJILLAS

Plano hau ezin daiteke erabili, ez berriztatu, gure baimenik gabe.

Gainazal perdoia Mecanizado superficial: –

Plano Zk./Plano Nº: HC - 18188

Zk. ord. du: -

Zk.gaitik ord.: -

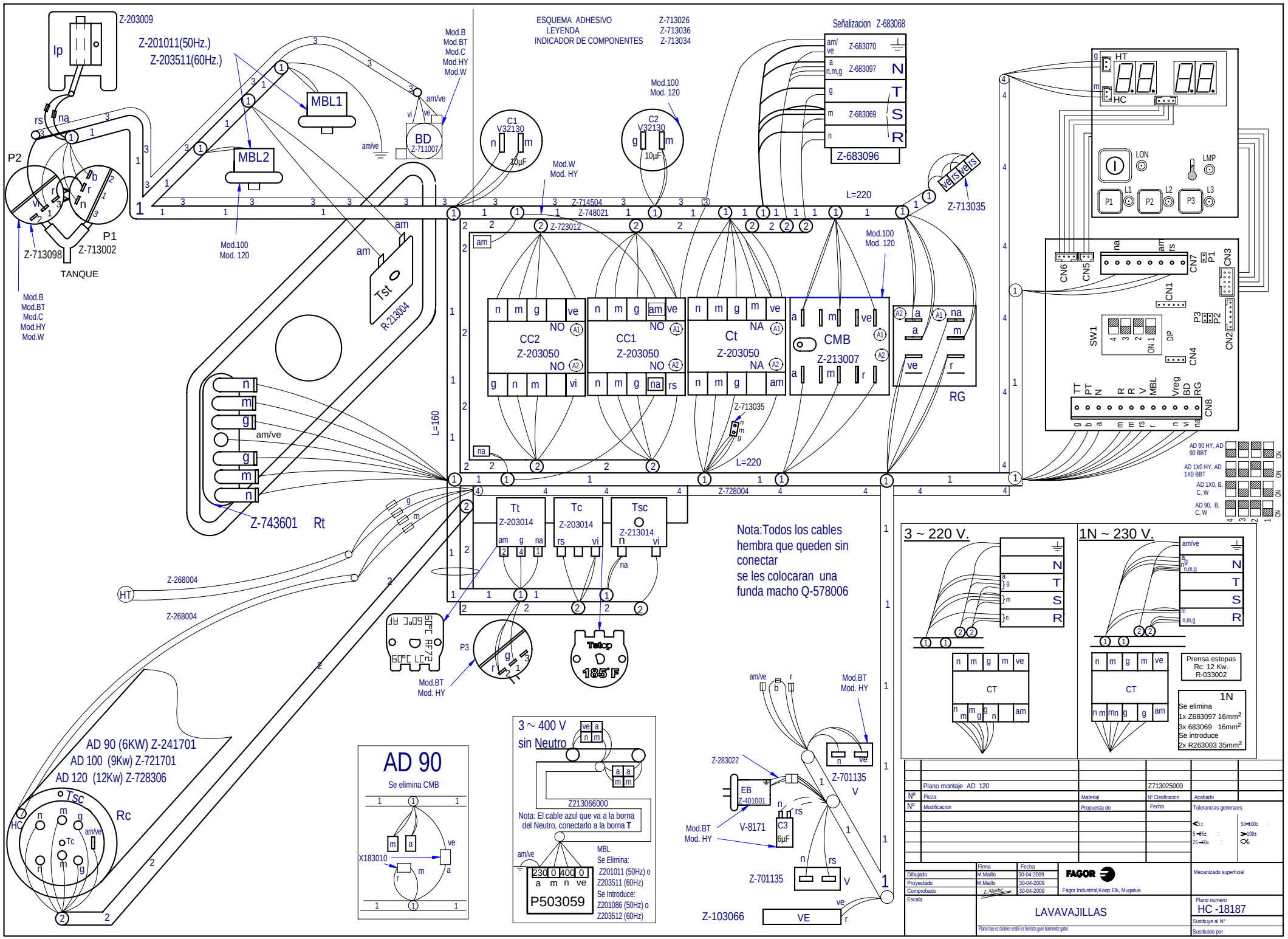

ESQUEMA ADHESIVO Z-713026
LEYENDA Z-713036
INDICADOR DE COMPONENTES Z-713034
Señalizacion Z-683068
Z-683070
Z-683097
Z-683069
Z-683096
Z-203009
Z-201011(50Hz.)
Z-203511(60Hz.)
MBL1
MBL2
BD
Z-711007
C1
V32130
C2
V32130
10µF
Mod.B
Mod.BT
Mod.C
Mod.HY
Mod.W
Mod.100
Mod. 120
Mod.W
Mod. HY
P1
P2
P3
Z-713098
Z-713002
TANQUE
Z-714504
Z-748021
Z-723012
Z-713035
L=220
L=160
Tst
R-213004
CC2
Z-203050
CC1
Z-203050
Ct
Z-203050
CMB
Z-213007
RG
Z-743601
Rt
Z-728004
Tt
Z-203014
Tc
Z-203014
Tsc
Z-213014
Z-268004
HT
Tstop
185°F
Nota:Todos los cables hembra que queden sin conectar se les colocaran una funda macho Q-578006
AD 90 (6KW) Z-241701
AD 100 (9Kw) Z-721701
AD 120 (12Kw) Z-728306
Tsc
Rc
AD 90
Se elimina CMB
X183010
3 ~ 400 V
sin Neutro
Z213066000
Nota: El cable azul que va a la borna del Neutro, conectarlo a la borna T
MBL
Se Elimina:
Z201011 (50Hz) o
Z203511 (60Hz)
Se Introduce:
Z201086 (50Hz) o
Z203512 (60Hz)
P503059
Z-283022
EB
Z-401001
V-8171
C3
6µF
Z-701135
Z-103066
VE
HT
HC
LON
LMP
L1
L2
L3
CN1
CN2
CN3
CN4
CN5
CN6
CN7
CN8
SW1
DIP
TT
PT
N
R
R
V
MBL
Vreg
BD
RG
AD 90 HY, AD 90 BBT
AD 1X0 HY, AD 1X0 BBT
AD 1X0, B, C, W
AD 90, B, C, W
3 ~ 220 V.
1N ~ 230 V.
CT
Prensa estopas
Rc: 12 Kw.
R-033002
1N
Se elimina
1x Z683097 16mm²
3x 683069 16mm²
Se introduce
2x R263003 35mm²
Plano montaje AD 120
Z713025000
Nº Pieza
Nº Modificacion
Material
Propuesta de
Nº Clasificacion
Fecha
Acabado
Tolerancias generales
Dibujado M.Maillo 30-04-2009
Proyectado M.Maillo 30-04-2009
Comprobado 30-04-2009
Escala
FAGOR
Fagor Industrial,Koop.Elk, Mugatua
Mecanizado superficial
LAVAVAJILLAS
Plano numero
HC -18187
Sustituye al Nº
Sustituido por

LEYENDA CAPOTA

	ESPAÑOL	FRANÇAIS	ENGLISH	DEUTSCH	ITALIANO
ⒶⒷ	Puntos de conexion con R	Points de conexion R	Conecction point with R	Anschlußpunkte mit R	Punti di collegamento con R
C 1/2/3	Condensador	Condensateur	Condenser	Kondensator	Condensatore
CMB	Contactor bomba lavado	Contacteur pompe lavage	Wash pump contactor	Kontaktschütz Waschpumpe	Contattore pompa lavaggio
Cc 1/2	Contactor calentamiento calderin	Contacteur chauf. surchauffeur	Boiler heating contactor	Kontaktschütz Boilerheizung	Contattore riscaldamento boiler
Ct	Contactor calentamiento tanque	Contacteur chaufage cuve	Tank heating contactor	Kontaktschütz Heizung Tank	Contattore riscaldamento serbatoio
CP	Rele puerta	Relais porte	Door relay	Türrelais	Rele porta
Ds.Det.	Dosificador detergente	Dosseur de detergent	Detergent doser	Dosierer Spülmittel	Dosatore detersivo
E.B	Electrobomba de presion	Electropompe de pression	Electric pressure pump	Elektro-Drucksteigungspumpe	Electropompa pressione
IG	Interruptor general	Interrupteur general	Main switch	Hauptschalter	Interruttore generale
IP	Micro puerta	Micro porte	Door microswitch	Mikroschalter Tür	Micro porta
L1	Piloto de encendido	Voyant funcionement	Operation light	Betriebsanzeigelampe	Spia accensione
L2	Piloto marcha	Voyant demarrage	Start light	Startanzeigelampe	Spia avvio
L3	Piloto maquina preparada	Voyant machine prêt	Light machine ready	Betriebsbereitschaftsanzeigelampe	Pilota macchina preparata
MBL 1/2	Bomba lavado	Pompe lavage	Wash pump	Waschpumpe	Pompa lavaggio
M	Motor programador	Moteur du programmateur	Motor programmer	Motor Programmiervorrichtung	Motore programmatore
M Av. R	Motor program. avance rapido	Moteur du programm.avance rapide	Motor programmer rapid advance	Motor Programmiervorrichtung schneller Vorlauf	Motore programmatore avanzamento rapido
M1	Micro programador marcha	Micro du programm. de marche	Micro programmer on	Motor Programmiervorrichtung Betrieb	Micro programmatore di funzionamento
M2	Micro programador lavado	Micro du programm. de lavage	Micro programmer wash	Motor Programmiervorrichtung Waschen	Micro programmatore di lavaggio
M3	Micro programador aclarado	Micro du programm. de rinçage	Micro programmer on	Motor Programmiervorrichtung Spülen	Micro programmatore di risciacquo
M4	Micro programador Termo-stop	Micro du programm. Termo-stop	Micro programmer Termo-stop	Motor Programmiervorrichtung Thermo-Stop	Micro programmatore Termo-stop
M5	Micro programador avance	Micro du programm. avance	Micro programmer advance	Motor Programmiervorrichtung Vorlauf	Micro programmatore avanzamento
M6	Micro programador avance	Micro du programm. avance	Micro programmer advance	Motor Programmiervorrichtung Vorlauf	Micro programmatore avanzamento
P	Presostato	Pressostat	Pressure switch	Druckwächter	Pressostato
R	Rele de Generador de A.C.	Relais du Generateur	Generator rele	Relais Generator	Rele Generatore
ⓇⓃ	Toma de alimentacion Generador A.C.	Alimentation generateur	Water heater feeding	Stromversorgungsanschluß Generator	Alimentazione generatore
RC	Resistencia calderin	Resistance surchauffeur	Boiler heating element	Heizwiderstand Boiler	Resistenza boiler
RT	Resistencia tanque	Resistance cuve	Tank heater	Heizwiderstand Tank	Resistenza serbatoio
Tt	Termostato tanque	Thermostat de cuve	Tank thermostat	Thermostat Tank	Termostato serbatoio
TC	Termostato calderin	Thermostat surchauffeur	Boiler thermostat	Thermostat kessel	Termostato boiler
Tst	Limitador tanque	Limitateur de cuve	Tank limiter	Begrenzer Tank	Limitatore serbatoio
TSC	Limitador calderin	Limiteur surchauffeur	Boiler Hi-limit	Begrenzer Boiler	Limitatore boiler
V	Electrovalvula llenado y aclarado	Electrovanne remplissage rinçage	Fill and rinse valve	Elektroventil Füllen und Spülen	Elettrovalvola riempimento e risciacquo
VE	Ventilador cuadro electrico	Ventilateur tableau electrique	Switchboard fan	Schalttafelventilator	Ventilatore quadro elettrico

Z-713036

HC-17400